Date (mmm dd yyyy)	Issued For	Rev.
12-07-2007	TITLE II DESIGN 30% REVIEW SUBMITTAL	C
03-28-2008	TITLE II DESIGN 60% REVIEW SUBMITTAL	D
07-31-2008	TITLE II DESIGN 90% REVIEW SUBMITTAL	E
08-25-2008	TITLE II DESIGN 100% OWNER REVIEW	F
02-19-2009	TITLE II CONSTRUCTION BID ISSUE	0

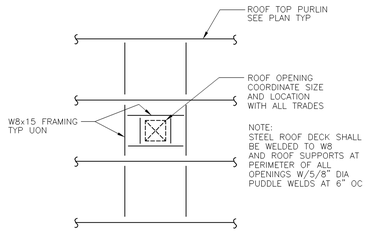

TYPICAL ROOF FRAMING FOR EQUIPMENT/CURB SUPPORT AND ROOF OPENING DETAIL

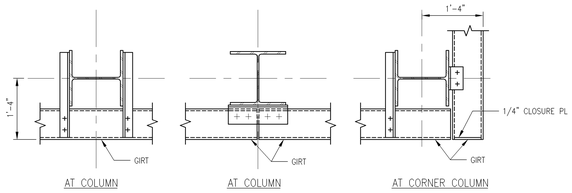

TYPICAL GIRT TO COLUMN PLAN DETAILS

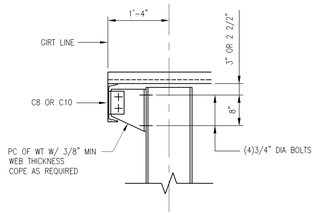

TYPICAL GIRT TO COLUMN CONNECTION

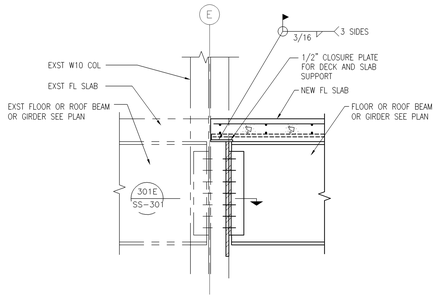

301F SECTION
SS-101 1"=1'-0"

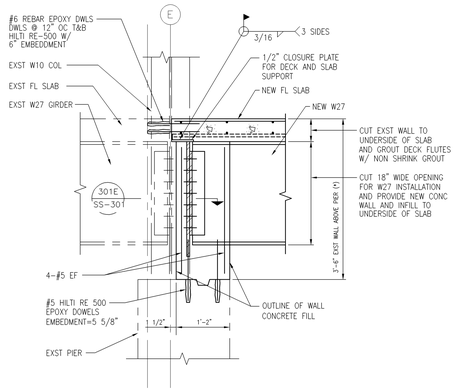

NOTE:
1. (*) = FIELD VERIFY AND ADJUST TO MATCH

301D SECTION
SC-101
SS-102 1"=1'-0"

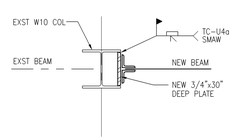

301E SECTION
SS-301 1"=1'-0"

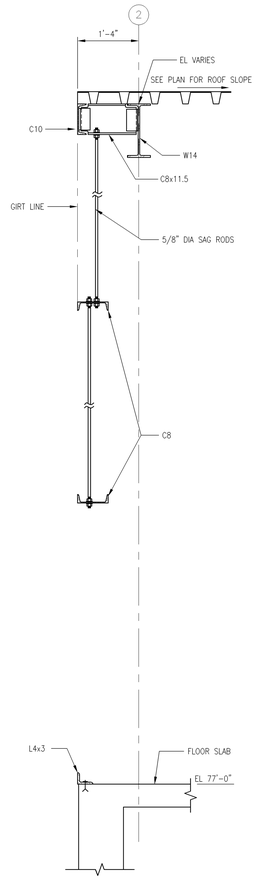

301C SECTION
SS-201 1"=1'-0"

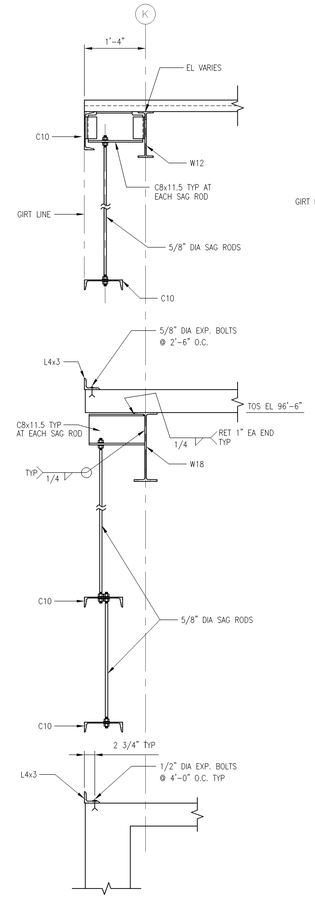

301B SECTION
SS-201 1"=1'-0"

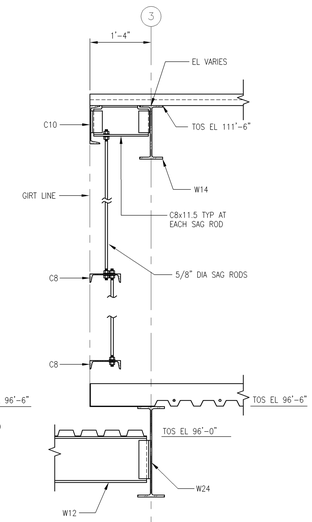

301A SECTION
SS-201 1"=1'-0"

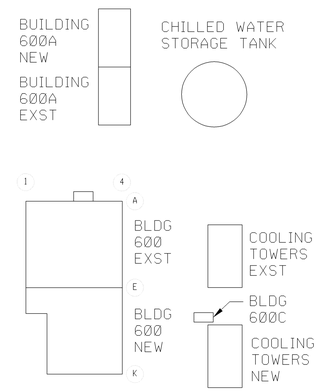

KEY PLAN
NO SCALE

NORTH

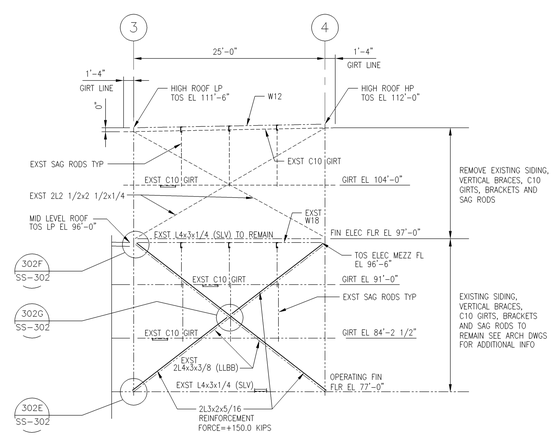

301G SECTION
SS-102 1/8"=1'-0"

NOTES:

1. FOR GENERAL NOTES REFER TO DWG S-001
2. FOR DESIGN LOADS AND CRITERIA REFER TO DWG S-002
3. PROVIDE DOUBLE NUT CONNECTIONS, ONE ON EACH SIDE OF GIRT OR SUPPORT AT EACH END OF SAG ROD

LEGEND:

——— NEW CONSTRUCION.
-·-·-·- EXISTING CONSTRUCTION

This drawing has been prepared solely for the use of Brookhaven National Laboratory, and there are no representations of any kind made by Giffels, Partnership to any party with whom Giffels, Partnership has not entered into a contract.

This drawing shall not be used for construction purposes until the seal and signature of the responsible registrant appears on the drawing, and proper permit forms and related fees are transmitted by the Owner, Owner's Agent or Contractor to the Authority Having Jurisdiction.

JOB NO.	SHEET NO.	REVISION	DATE	DWN.	APP'S.	QA
		A				

BROOKHAVEN NATIONAL LABORATORY

UNDER CONTRACT WITH
UNITED STATES DEPARTMENT OF ENERGY
PLANT ENGINEERING DIVISION
UPTON, NEW YORK 11973

Giffels, Partnership
25200 Telegraph Road, Suite 200
Southfield, Michigan 48033 USA
Tel. 248-936-8000
Fax 248-936-8111

Approved By: W KUSSRO
Project Manager: G. KAPLAN
Project Engineer/Architect: S MUDDAPPA
Project No. SF070003

JOB TITLE	DWG. TITLE
CENTRAL CHILLED WATER FACILITY PHASE II	BLDG 600 SECTIONS & DETAILS (STEEL)

ILR,GPP,LNI, HEM	DATE		ACCT. NO.	SHEET OF
SCALE: AS NOTED	DWN. BY: JD	REV'D BY: WK	JOB NO.: 11705	DWG. NO.: SS-301
ESHQ RISK LEVEL	APP'D. BY: WK		BLDG. NO.: 600	
PATH:				