Date (mmm dd yyyy)	Issued For	Rev.
03-28-2008	TITLE II DESIGN 60% REVIEW SUBMITTAL	D
07-31-2008	TITLE II DESIGN 90% REVIEW SUBMITTAL	E
08-25-2008	TITLE II DESIGN 100% OWNER REVIEW	F
02-19-2009	TITLE II CONSTRUCTION BID ISSUE	0

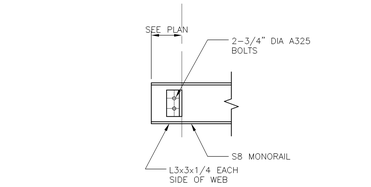

302C SS-302 MONORAIL WHEEL STOP DETAIL 1"=1'-0"

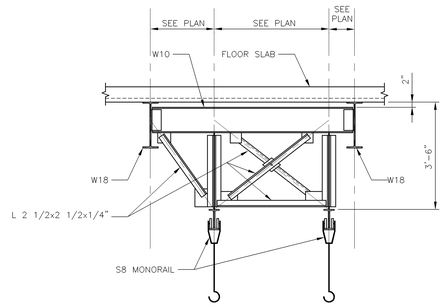

302B SS-302 SS-102 SECTION 1/2"=1'-0"

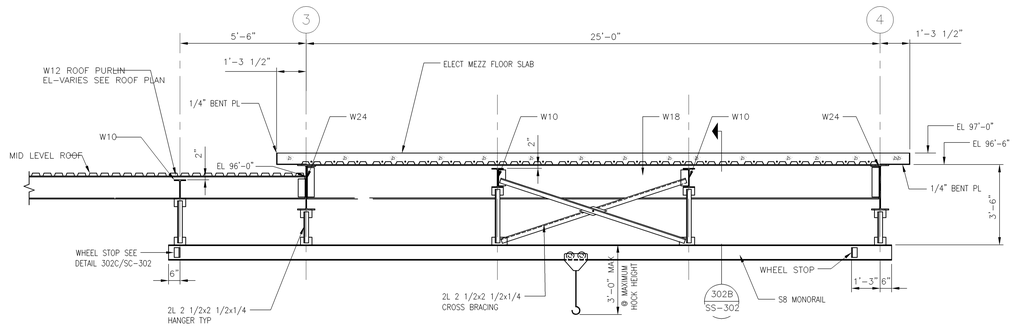

302A SS-102 SECTION 3/8"=1'-0"

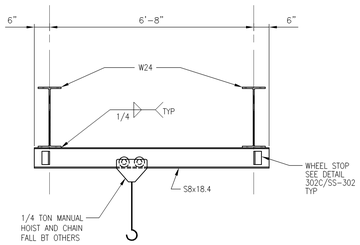

302D SS-102 SECTION 1/2"=1'-0"

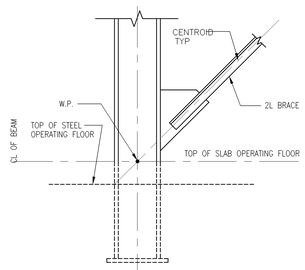

BRACE AT COL BASE

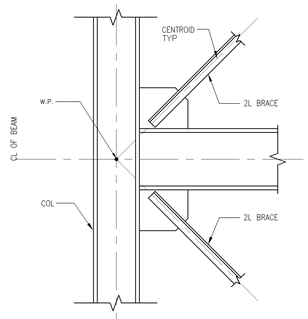

BRACING AT BEAM AND COL TYPE I

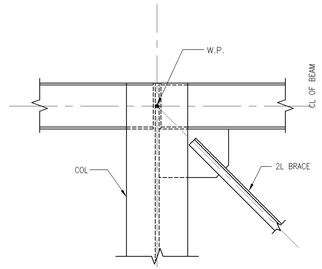

BRACING AT BEAM AND COL TYPE II

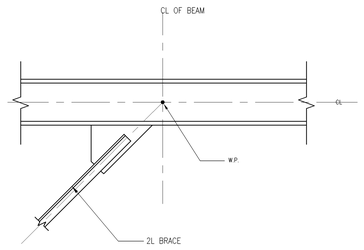

BRACING AT BEAM

TYPICAL VERTICAL BRACING DETAILS

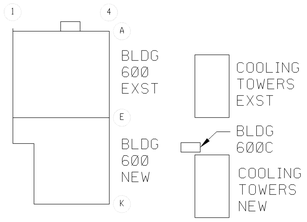

KEY PLAN NO SCALE

NORTH

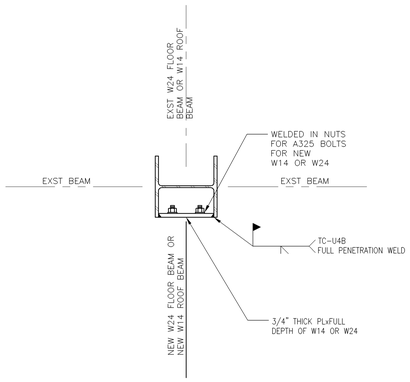

TYPICAL EXST COLUMN TO NEW BEAM CONNECTION

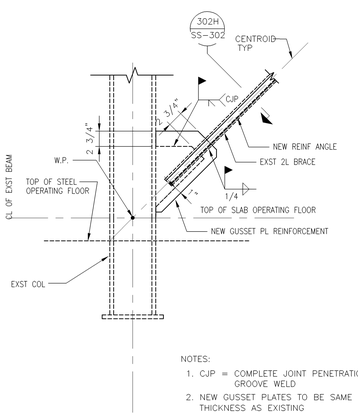

NOTES:
1. CJP = COMPLETE JOINT PENETRATION GROOVE WELD
2. NEW GUSSET PLATES TO BE SAME THICKNESS AS EXISTING

302E SS-201 SS-301 DETAIL NTS

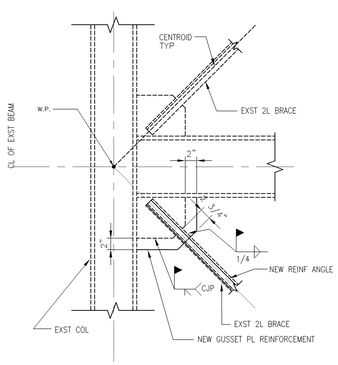

302F SS-201 SS-301 DETAIL NTS

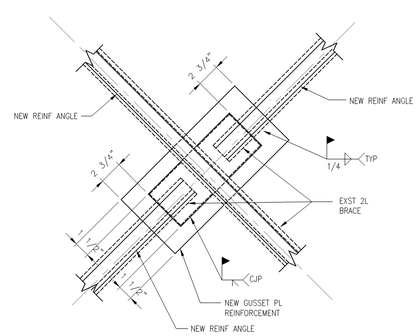

302G SS-201 SS-301 DETAIL 1 1/2"=1'-0"

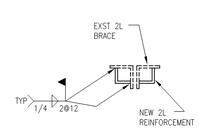

302H SS-201 DETAIL 1 1/2"=1'-0"

NOTES:
1. FOR GENERAL NOTES REFER TO DWG S-001

This drawing has been prepared solely for the use of Brookhaven National Laboratory and there are no representations of any kind made by Giffels, Partnership to any party with whom Giffels, Partnership has not entered into a contract.

This drawing shall not be used for construction purposes until the seal and signature of the responsible registrant appears on the drawing, and proper permit forms and related fees are transmitted by the Owner, Owner's Agent or Contractor to the Authority Having Jurisdiction.

JOB NO	SHEET	NO	REVISION	DATE	DWN.	APP'D.	GA

BROOKHAVEN NATIONAL LABORATORY

UNDER CONTRACT WITH
UNITED STATES DEPARTMENT OF ENERGY
PLANT ENGINEERING DIVISION
UPTON, NEW YORK 11973

Giffels, Partnership
25200 Telegraph Road, Suite 200
Southfield, Michigan 48033 USA
Tel. 248-936-8000
Fax 248-936-8111

Approved By: W KUSSRO
Project Manager: G. KAPLAN
Project Engineer/Architect: S MUDDAPPA
Project No.: SF070003

JOB TITLE: CENTRAL CHILLED WATER FACILITY PHASE II		DWG. TITLE: BLDG 600 SECTIONS & DETAILS (STEEL)	
ILR,GPP,LNI, HEM	DATE	ACCT. NO.	SHEET OF
SCALE: AS NOTED	DWN. BY: JD / REV'D BY: WK	JOB NO.: 11705	DWG. NO. SS-302
ESHQ RISK LEVEL	APP'D. BY: WK	BLDG. NO.: 600	
PATH:			