Date (mmm dd yyyy)	Issued For	Rev.
09-21-2007	TITLE 1 60% REVIEW	A
10-24-2007	TITLE 1 100% COMPLETE	B
12-07-2007	TITLE II DESIGN 30% REVIEW SUBMITTAL	C
03-28-2008	TITLE II DESIGN 60% REVIEW SUBMITTAL	D
07-31-2008	TITLE II DESIGN 90% REVIEW SUBMITTAL	E
08-25-2008	TITLE II DESIGN 100% OWNER REVIEW	F
02-19-2009	TITLE II CONSTRUCTION BID ISSUE	0

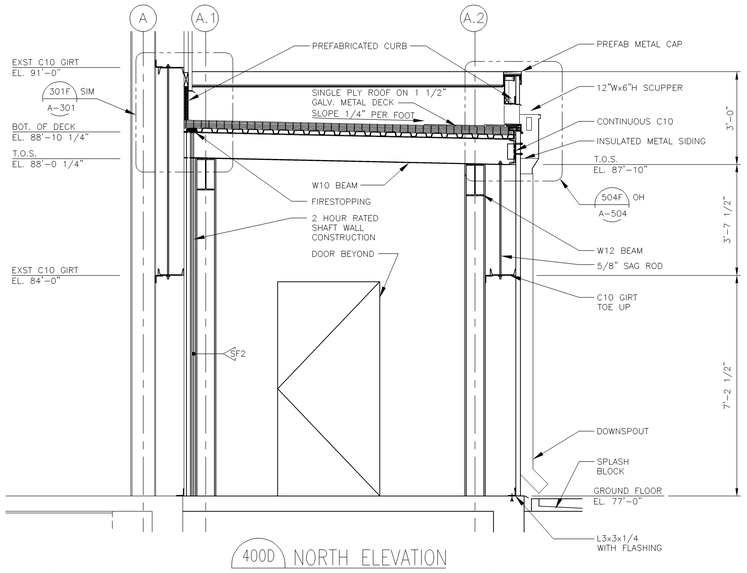

400D NORTH ELEVATION
A-400 1/2" = 1'-0"

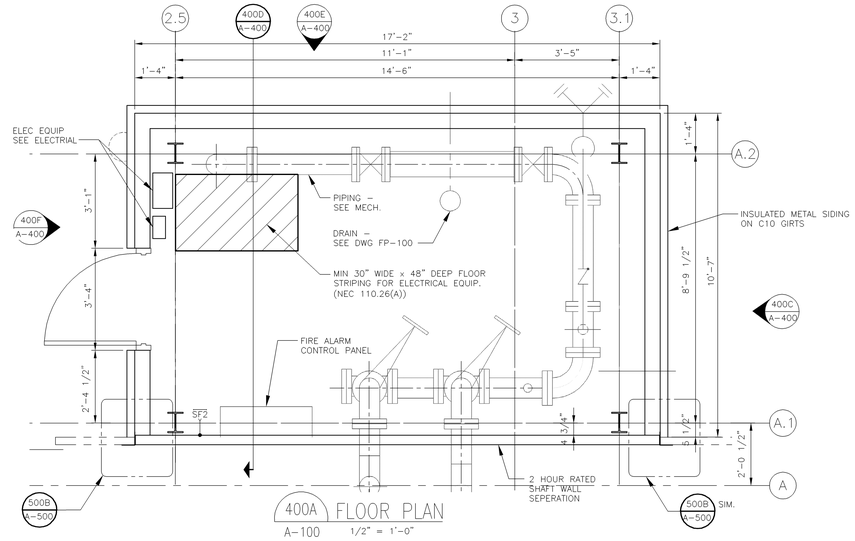

400A FLOOR PLAN
A-100 1/2" = 1'-0"

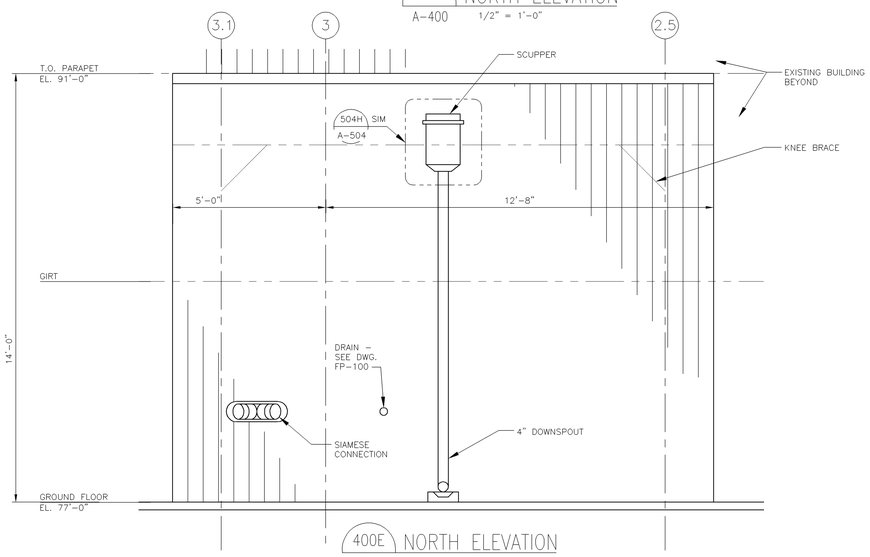

400E NORTH ELEVATION
A-100, 101 1/2" = 1'-0"
A-400

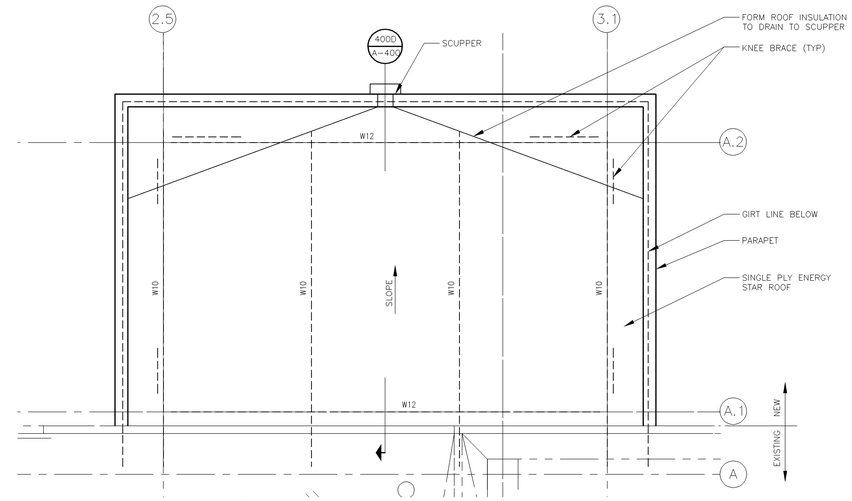

400B ROOF PLAN
A-101 1/2" = 1'-0"

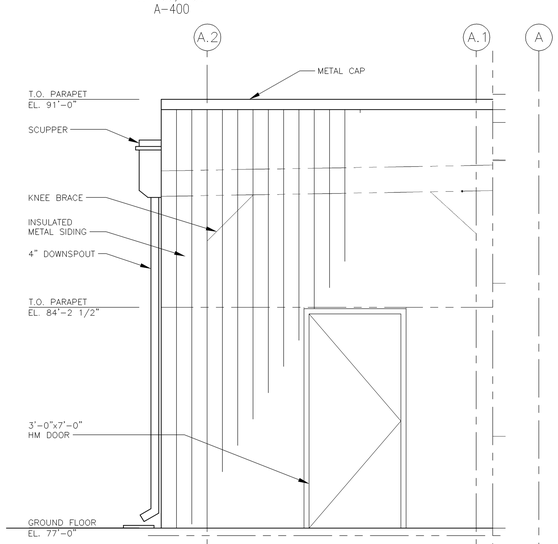

400F WEST ELEVATION
A-100, 101 1/2" = 1'-0"
A-200, 400

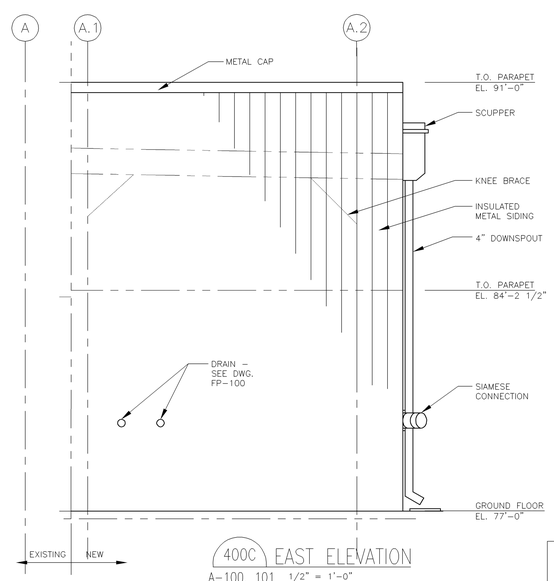

400C EAST ELEVATION
A-100, 101 1/2" = 1'-0"
A-200, 400

This drawing has been prepared solely for the use of Brookhaven National Laboratory, and there are no representations of any kind made by Giffels, Partnership to any party with whom Giffels, Partnership has not entered into a contract.

This drawing shall not be used for construction purposes until the seal and signature of the responsible registrant appears on the drawing, and proper permit forms and related fees are transmitted by the Owner, Owner's Agent or Contractor to the Authority Having Jurisdiction.

JOB NO.	SHEET	NO.	REVISION	DATE	DWN.	APP'D.	QA

BROOKHAVEN NATIONAL LABORATORY

UNDER CONTRACT WITH
UNITED STATES DEPARTMENT OF ENERGY
PLANT ENGINEERING DIVISION
UPTON, NEW YORK 11973

Giffels, Partnership
25200 Telegraph Road, Suite 200
Southfield, Michigan 48033 USA
Tel. 248-936-8000
Fax 248-936-8111

Approved By: D O'BEIRNE
Project Manager: G. KAPLAN
Project Engineer/Architect: D C SMITH
Project No.: SF070003

JOB TITLE: CENTRAL CHILLED WATER FACILITY PHASE II		DWG. TITLE: FIRE CONTROL CENTER	
ILR,GPP,LN6, HEM	DATE	ACCT. NO. SF070003	SHEET OF
SCALE: AS NOTED	DWN. BY: DD / REV'D BY: D O'B	JOB NO. 11705	DWG. NO. A-400
ESHQ RISK LEVEL	APP'D. BY: D O'BEIRNE	BLDG. NO. 600	
PATH:			