Date (mmm dd yyyy)	Issued For	Rev.
03-28-2008	TITLE II DESIGN 60% REVIEW SUBMITTAL	D
07-31-2008	TITLE II DESIGN 90% REVIEW SUBMITTAL	E
08-25-2008	TITLE II DESIGN 100% OWNER REVIEW	F
02-19-2009	TITLE II CONSTRUCTION BID ISSUE	0

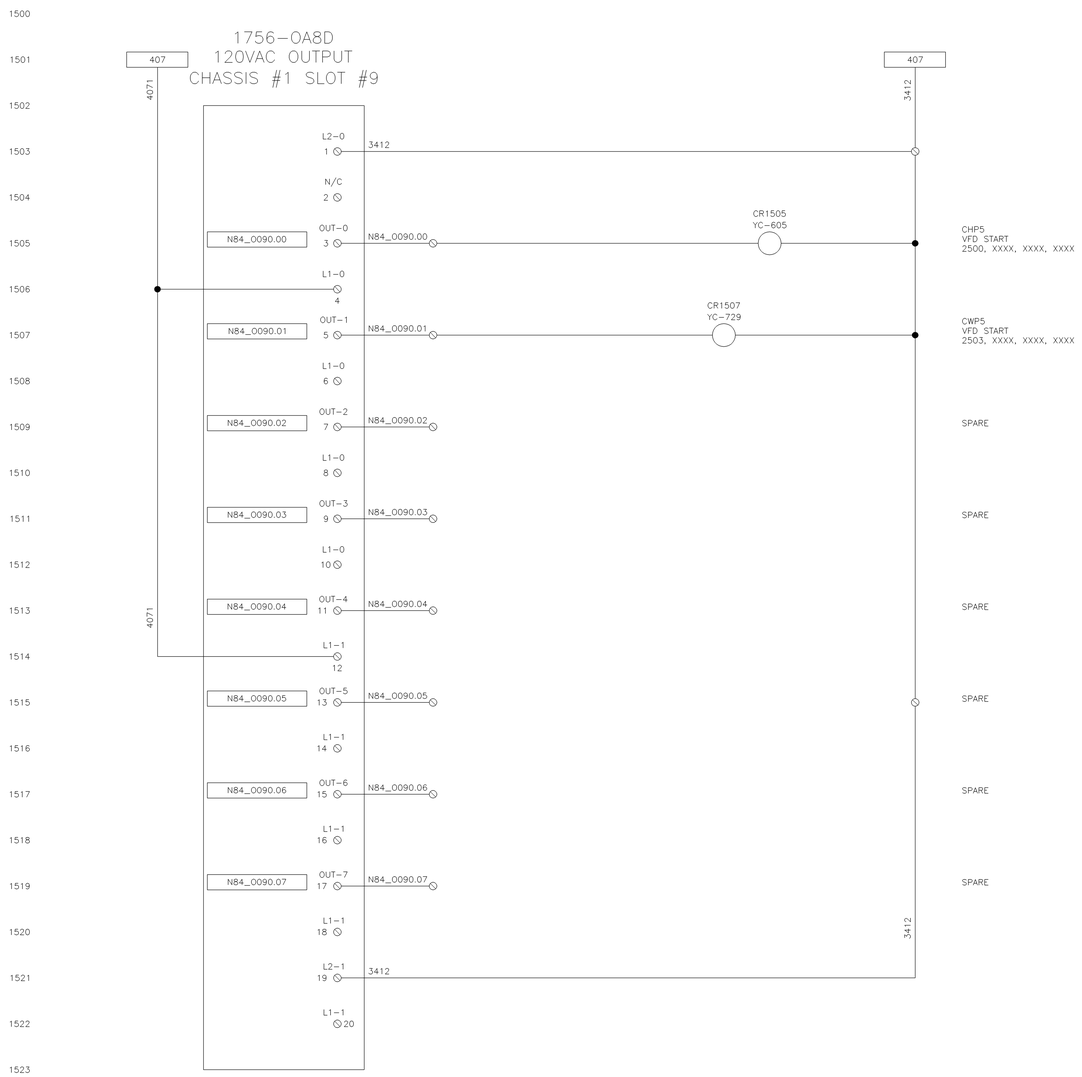

NOTES:
1. ALL MODULE TERMINALS WITH THE SAME NAME ARE CONNECTED TOGETHER ON THE MODULE.

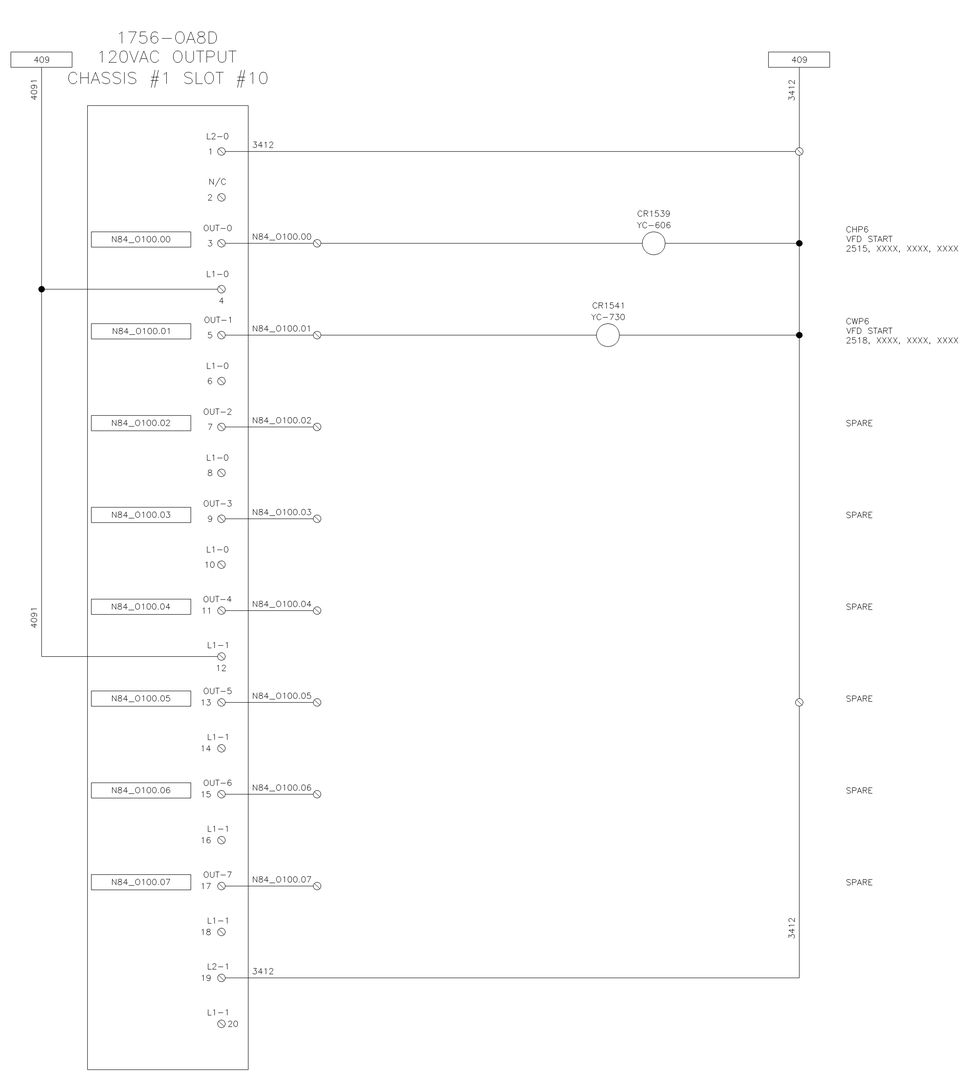

NOTES:
1. ALL MODULE TERMINALS WITH THE SAME NAME ARE CONNECTED TOGETHER ON THE MODULE.

This drawing has been prepared solely for the use of Brookhaven National Laboratory, and there are no representations of any kind made by Giffels, Partnership to any party with whom Giffels, Partnership has not entered into a contract.

This drawing shall not be used for construction purposes until the seal and signature of the responsible registrant appears on the drawing, and proper permit forms and related fees are transmitted by the Owner, Owner's Agent or Contractor to the Authority Having Jurisdiction.

JOB NO.	SHEET	NO	REVISION	DATE	DWN.	APP'D.	QA
		A					

BROOKHAVEN NATIONAL LABORATORY

UNDER CONTRACT WITH
UNITED STATES DEPARTMENT OF ENERGY
PLANT ENGINEERING DIVISION
UPTON, NEW YORK 11973

JOB TITLE: CENTRAL CHILLED WATER FACILITY PHASE II		DWG. TITLE: CHASSIS #1 SLOT 9 AND 10 DO	
ILR,GPP,LNI, HEM	DATE	ACCT. NO.	SHEET 15 OF 31
SCALE: NO SCALE	DWN. BY: MC / REV'D BY: MC	JOB NO. 11705	DWG. NO. M-634-15
ESHQ RISK LEVEL	APP'D. BY	BLDG. NO. 600	
PATH:			

Giffels, Partnership
25200 Telegraph Road, Suite 200
Southfield, Michigan 48033 USA
Tel. 248-936-8000
Fax 248-936-8111

Approved By: M. CODRINGTON
Project Manager: G. KAPLAN
Project Engineer/Architect: M. CODRINGTON
Project No.: SF070003

Acad Version: 16.2s (LMS Tech)
User Name: Ed Piendel
Path\Name: C:\d\timsdatasf$\brookhaven_national_laboratory\sf070003\500-deliv\panel100percentdwgs\11705-M634-15.DWG
Plot Date\Time: 3/4/2009 11:09 AM Current Plotsyle: ----
Page Set Up Name: ----