Date (mmm dd yyyy)	Issued For	Rev.
10-24-2007	TITLE I 100% COMPLETE	B
12-07-2007	TITLE II DESIGN 30% REVIEW SUBMITTAL	C
03-28-2008	TITLE II DESIGN 60% REVIEW SUBMITTAL	D
07-31-2008	TITLE II DESIGN 90% REVIEW SUBMITTAL	E
08-25-2008	TITLE II DESIGN 100% OWNER REVIEW	F
02-19-2009	TITLE II CONSTRUCTION BID ISSUE	G

LP-2

Fully Rated

VOLTAGE: 480/277V 3 PH 4W MAINS: 100A MAIN BKR Isc Duty: 65,000A

FED FROM: DP-2 LOCATION: OPERATING FLOOR MTG: SURFACE

	CIR. NO.	BKR SIZE	LOAD (VA) A	B	C	DESCRIPTION	CIR. NO.	BKR SIZE	LOAD (VA) A	B	C	DESCRIPTION	
* **	1	20A	1834			NI/EMER. EXT LT'S SOUTH OF ROW E	2	30A	6000			EYEWASH HEATER AT COL 2/E.2 (22A)	**
	3	20A				SPARE	4	30A		6000		EYEWASH HEATER AT COL 2/G.4 (22A)	**
	5	20A			910	LTG PIPE TUNNEL	6	30A			6000	EYEWASH HEATER AT COL 2/J.4 (22A)	**
**	7	20A	3442			LTG OPER FLR, FIRE CNTR & LCKR	8	20A				SPARE	
	9	20A		975		LTG ELECTRICAL MEZZANINE	10	20A				SPARE	
	11	20A			570	LTG BUILDING EXTERIOR	12	20A				SPARE	
	13	20A	570			ROOF LIGHTING	14	20A				SPARE	
	15	20A				SPARE	16	20A				SPARE	
	17	20A				SPARE	18	20A				SPARE	
	TOTAL (VA)		5846	975	1480		TOTAL (VA)		6000	6000	6000		

PANEL TOTAL 26301 VA (CONNECTED) 31.6 AMPS (CONNECTED)

* INDICATES TO PROVIDE CIRCUIT BREAKER LOCK-ON DEVICE

** INDICATES TO RUN #10 WIRE

RP-4

Fully Rated

VOLTAGE: 208/120V 3 PH 4W MAINS: 70A MAIN BKR Isc Duty: 10,000A

FED FROM: DP-2 VIA XFMR LOCATION: OPERATING FLOOR MTG: SURFACE

CIR. NO.	BKR SIZE	LOAD (VA) A	B	C	DESCRIPTION	CIR. NO.	BKR SIZE	LOAD (VA) A	B	C	DESCRIPTION	
1	20A	1025			1 REC W LOCKER-CNTR & SHWR LT	2	20A	1200			I/O CONTROL PNL 600C CONTROL RM	
3	20A		400		2 RECPT WOMENS LKR, UNISEX TLT	4	25A		2000		I/O CONTROL PNL 600-2 OPERAT'G FL	**
5	20A			800	4 REC OPERATING FLOOR	6	15A			600	I/O CONTROL PNL 600-2 OPERAT'G FL	
7	20A	800			4 REC OPERATING FLOOR	8	20A	1344			AIR DRYER AD-3	
9	20A		400		2 REC OPERATING FLOOR	10	15A		400		IAF-3 & IAF-4 CONTROL POWER	
11	20A			400	1 REC CONT RM 108 FOR PAGING AMP	12	15A			300	SUH-7, 8, 9 & 10 1/40 HP EACH	
13	20A				SPARE	14	20A	200			1 RECPT FIRE CNTR	**
15	20A				SPARE	16	20A 2P		1500		EUH-6 FIRE CENTER	**
17	20A				SPARE	18				1500		
19	20A				SPARE	20	20A				SPARE	
21	20A				SPARE	22	20A				SPARE	
23	20A				SPARE	24	20A				SPARE	
25					SPACE	26	20A				SPARE	
27					SPACE	28					SPACE	
29					SPACE	30					SPACE	
TOTAL (VA)		1825	800	1200		TOTAL (VA)		2744	3900	2400		

PANEL TOTAL 12869 VA (CONNECTED) 35.7 AMPS (CONNECTED)

** INDICATES TO RUN #10 WIRE

RP-5

Fully Rated

VOLTAGE: 208/120V 3 PH 4W MAINS: 50A MAIN BKR Isc Duty: 10,000A

FED FROM: DP-2 VIA XFMR LOCATION: ELECTRICAL MEZZ MTG: SURFACE

	CIR. NO.	BKR SIZE	LOAD (VA) A	B	C	DESCRIPTION	CIR. NO.	BKR SIZE	LOAD (VA) A	B	C	DESCRIPTION
	1	20A	400			2 RECPT ELECTRICAL MEZZ	2	15A	150			SUH-11 & 12 BOTH 1/40 HP
	3	20A		600		3 RECPT ELECTRICAL MEZZ	4	15A		150		ACU-2,AHU-3 & AHU-4 CNTRL PNL
	5	20A			800	4 RECPT ELECTRICAL MEZZ	6	15A			300	CT-5 & 6 FAN MTR HEATERS
**	7	25A	2000			I/O CONTROL PANEL 600-3	8	20A				SPARE
	9	20A				SPARE	10	20A				SPARE
	11	20A				SPARE	12	20A				SPARE
	13	20A				SPARE	14	20A				SPARE
	15	20A				SPARE	16	20A				SPARE
	17	20A				SPARE	18	20A				SPARE
	19	20A				SPARE	20					SPACE
	21					SPACE	22					SPACE
	23					SPACE	24					SPACE
	TOTAL (VA)		2400	600	800		TOTAL (VA)		150	150	300	

PANEL TOTAL 4400 VA (CONNECTED) 12.2 AMPS (CONNECTED)

** INDICATES TO RUN #10 WIRE

RP-6

Fully Rated

VOLTAGE: 208/120V 3 PH 4W MAINS: 80A MAIN BKR Isc Duty: 10,000A

FED FROM: DP-2 VIA XFMR LOCATION: PIPE TUNNEL MTG: SURFACE

	CIR. NO.	BKR SIZE	LOAD (VA) A	B	C	DESCRIPTION	CIR. NO.	BKR SIZE	LOAD (VA) A	B	C	DESCRIPTION	
**	1	20A	2000			I/O CONTROL PNL 600-1S PIPE TUNL	2	15A 3P	150			CHW PUMP RP1	NOTE 3
**	3	20A		2800		I/O CONTROL PNL 600-1S PIPE TUNL	4			150			
	5	20A			600	3 RECPT PIPE TUNNEL	6				150		
	7	20A	600			3 RECPT PIPE TUNNEL	8	20A	2000			I/O CONTROL PNL 600-1N PIPE TUNL	**
	9	20A		60		SP-3 & 4 CONT PNL PIPE TUNNEL	10	20A		2800		I/O CONTROL PNL 600-1N PIPE TUNL	**
NOTE 6	11	20A			1600	7500KVA TRANS FUT FAN POWER	12	20A				SPARE	
**	13	20A	1680			XFMR 13.8KV CAB HTR, DEVICES	14	20A				SPARE	
**	15	20A		1680		XFMR 4.16KV CAB HTR, DEVICES	16	20A				SPARE	
**	17	20A			1000	XFMR LOAD TAP CHANGER MTR DR	18	20A				SPARE	
	21	20A				SPACE	22	20A				SPACE	
	23	20A				SPACE	24	20A				SPACE	
	TOTAL (VA)		4280	4540	600		TOTAL (VA)		2150	2950	150		

PANEL TOTAL 14670 VA (CONNECTED) 40.7 AMPS (CONNECTED)

** INDICATES TO RUN #8 WIRE

RP-U

Fully Rated

VOLTAGE: 208/120V 3 PH 4W MAINS: 100A MAIN BKR Isc Duty: 10,000A

FED FROM: DP-2 VIA 30KVA UPS LOCATION: ELECTRICAL MEZZ MTG: SURFACE

	CIR. NO.	BKR SIZE	LOAD (VA) A	B	C	DESCRIPTION	CIR. NO.	BKR SIZE	LOAD (VA) A	B	C	DESCRIPTION	
*	1	15A	112			ARC FLASH RELAYS POWER	2	20A	1000			FIRE ALARM PANEL	* **
*	3	15A		600		I/O CONTROL PNL 600-1N PIPE TUNL	4	20A		1000		FIRE ALARM PANEL	* **
*	5	15A			600	I/O CONTROL PNL 600-1S PIPE TUNL	6	60A			6408	5KV VAC BKRS CONT PWR BUS	*
*	7	20A	960			I/O CONT PNL 600C CONTROL ROOM	8	50A	4272			15KV VAC BKRS CONT PWR BUS	* NOTE 4
*	9	15A		600		I/O CONTROL PNL 600-2 OPERATG FL	10	25A		2000		15KV VAC BKRS HEATERS BUS	* NOTE 5
*	11	15A			600	I/O CONTROL PNL 600-3 ELEC MEZZ	12	20A				SPARE	
	13	20A				SPARE	14	20A				SPARE	
	15	20A				SPARE	16	20A				SPARE	
	17	20A				SPARE	18	20A				SPARE	
	19	20A				SPARE	20					SPACE	
	21					SPACE	22					SPACE	
	23					SPACE	24					SPACE	
	TOTAL (VA)		1072	1200	1200		TOTAL (VA)		5272	3000	6408		

PANEL TOTAL 18152 VA (CONNECTED) 50.4 AMPS (CONNECTED)

* INDICATES TO PROVIDE CIRCUIT BREAKER LOCK-ON DEVICE

** INDICATES TO RUN #10 WIRE

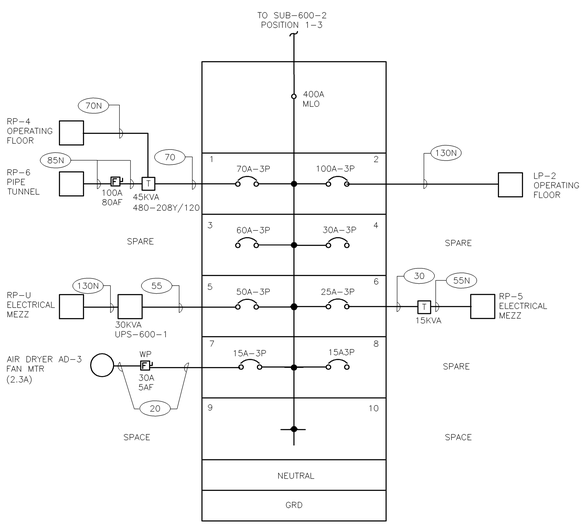

DP-2

480/277V, 3PH, 4W

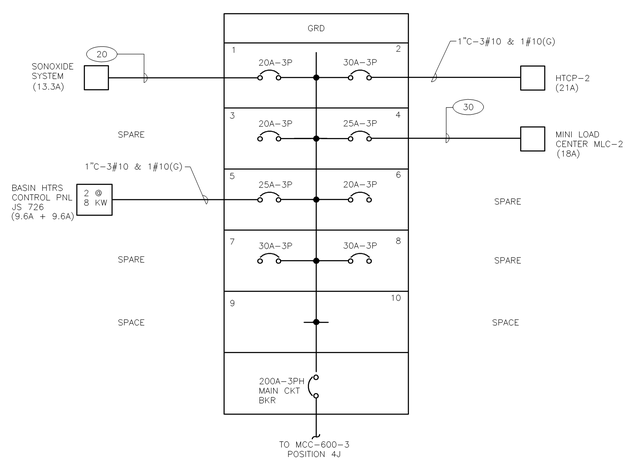

DP-3

480V, 3PH, 3W

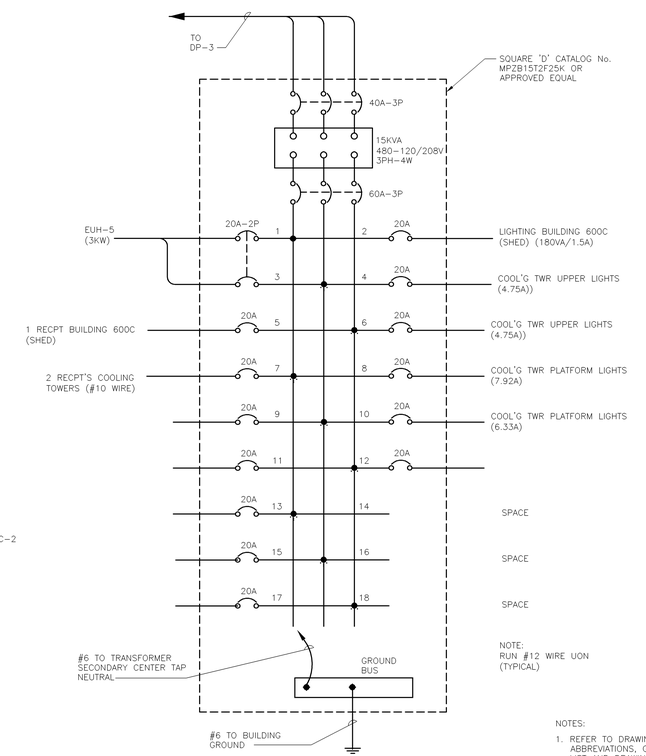

15KVA MLC-2

480-208Y/120V, 3PH, 4W

NOTES:

1. REFER TO DRAWING E-001 FOR ELECTRICAL ABBREVIATIONS, GENERAL NOTES AND DRAWING LIST AND DRAWING E-002 FOR ELECTRICAL SYMBOLS.
2. SEE CONDUIT AND WIRE SCHEDULE ON DRAWING E-603.
3. BID ALTERNATE #1.
4. FOR 120 VOLT POWER ROUTED IN DUCT BANK TO 15KV VACUUM BREAKERS, RUN #1 WIRE AND #1 GROUND WIRE.
5. FOR 120 VOLT POWER ROUTED IN DUCT BANK TO 15KV VACUUM BREAKERS HEATERS, RUN #4 WIRE. NOTE, COMMON GROUND WITH 15KV VACUUM BREAKER CONTROL POWER (SEE NOTE 4.)
6. FOR 120 VOLT POWER ROUTED IN DUCT BANK TO 7500KVA TRANSFORMER FANS RUN 2#8 & 1#8(G).

This drawing has been prepared solely for the use of Brookhaven National Laboratory, and there are no representations of any kind made by Giffels, Partnership to any party with whom Giffels, Partnership has not entered into a contract.

This drawing shall not be used for construction purposes until the seal and signature of the responsible registrant appears on the drawing, and proper permit forms and related fees are transmitted by the Owner, Owner's Agent or Contractor to the Authority Having Jurisdiction.

JOB NO.	SHEET	NO	REVISION	DATE	DWN.	APP'D.	DA

BROOKHAVEN NATIONAL LABORATORY

UNDER CONTRACT WITH
UNITED STATES DEPARTMENT OF ENERGY
PLANT ENGINEERING DIVISION
UPTON, NEW YORK 11973

Giffels, Partnership
25200 Telegraph Road, Suite 200
Southfield, Michigan 48033 USA
Tel. 248-936-8000
Fax 248-936-8111

Approved By: R BARTOY
Project Manager: G. KAPLAN
Project Engineer/Architect: J BOSSORY
Project No.: SF070003

JOB TITLE: CENTRAL CHILLED WATER FACILITY PHASE II

DWG. TITLE: DP-2 & 3 RISERS & PNL SCHEDULES

ILR,GPP,LNI, HEM	DATE	ACCT. NO.	SHEET OF
SCALE: NONE	DWN. BY: E A / REV'D BY: RB	JOB NO.: 11705	DWG. NO.: E-607
ESHQ RISK LEVEL	APP'D. BY: R BARTOY	BLDG. NO.: 600	
PATH:			