Date (mmm dd yyyy)	Issued For	Rev.
09-21-2007	TITLE 1 60% REVIEW	A
10-24-2007	TITLE 1 100% COMPLETE	B
12-07-2007	TITLE II DESIGN 30% REVIEW SUBMITTAL	C
03-28-2008	TITLE II DESIGN 60% REVIEW SUBMITTAL	D
07-31-2008	TITLE II DESIGN 90% REVIEW SUBMITTAL	E
08-25-2008	TITLE II DESIGN 100% OWNER REVIEW	F
02-19-2009	TITLE II CONSTRUCTION BID ISSUE	0

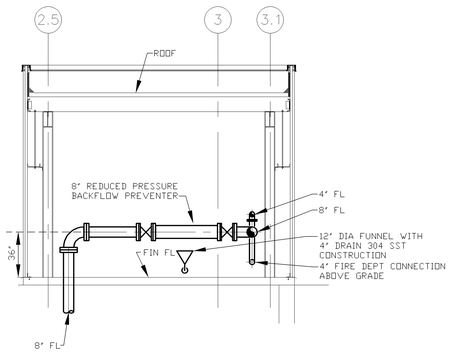

100A SECTION
FP-100 1/4" = 1'-0"

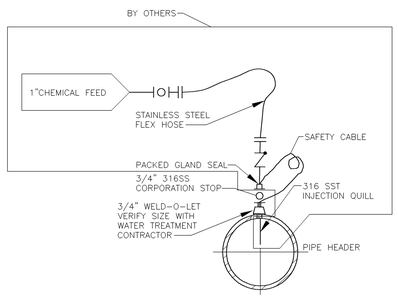

100A CORPORATION STOP INJECTION ASSEMBLY DETAIL
FP-100 NO SCALE

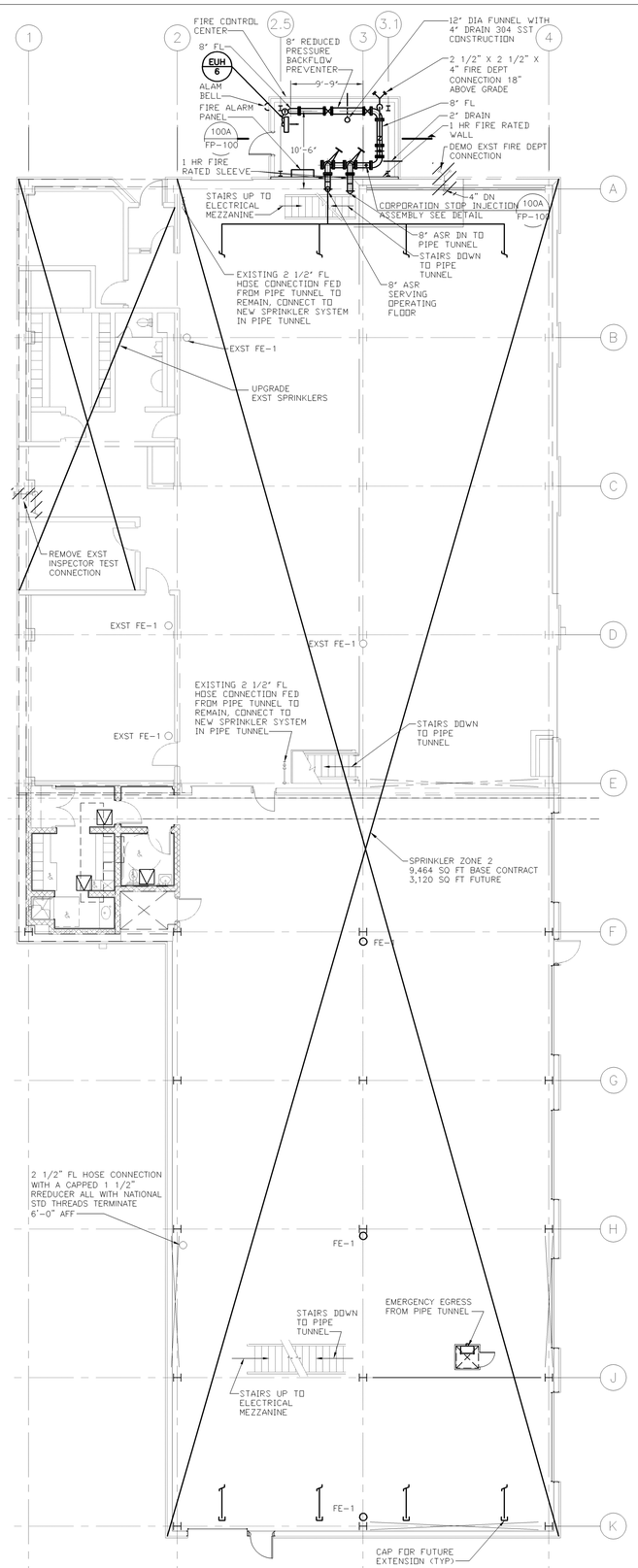

FIRE PROTECTION PLAN – OPERATING FLOOR LEVEL
1/8"=1'-0" EL = 77'-0"

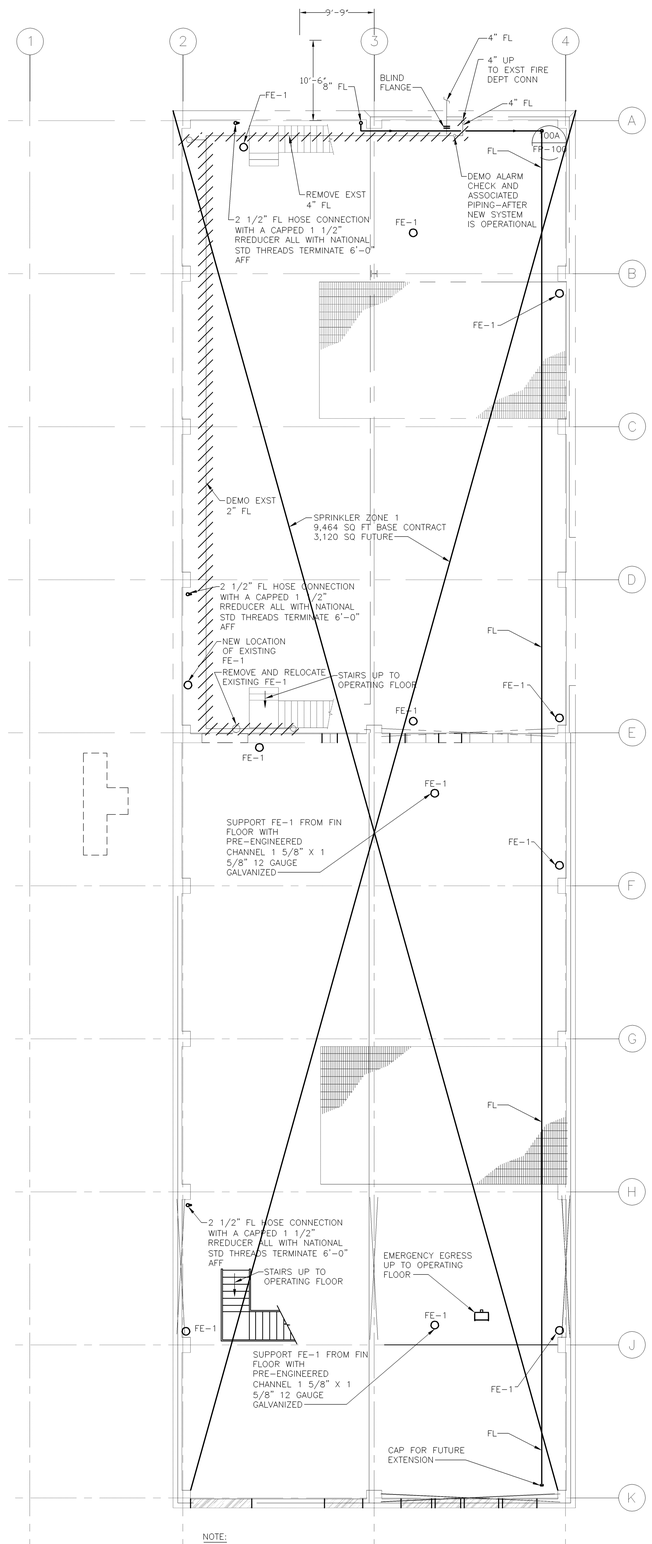

NOTE:
1. SPRINKLER SYSTEM BRANCH PIPING IN PIPE TUNNEL SHALL NOT PASS UNDER PIPE SLEEVES INSTALLED IN OPERATING FLOOR FOR FUTURE VERTICAL PIPING.

FIRE PROTECTION PLAN – PIPE TUNNEL
1/8"=1'-0" EL = 64'-0"

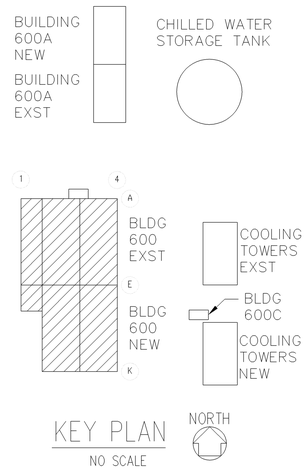

KEY PLAN
NO SCALE

LEGEND
EXISTING
NEW
DEMOLITION

This drawing has been prepared solely for the use of Brookhaven National Laboratory and there are no representations of any kind made by Giffels, Partnership to any party with whom Giffels, Partnership has not entered into a contract.

This drawing shall not be used for construction purposes until the seal and signature of the responsible registrant appears on the drawing, and proper permit forms and related fees are transmitted by the Owner, Owner's Agent or Contractor to the Authority Having Jurisdiction.

JOB NO	SHEET	NO	REVISION	DATE	DWN.	APP'D.	QA
		A					

BROOKHAVEN NATIONAL LABORATORY
UNDER CONTRACT WITH
UNITED STATES DEPARTMENT OF ENERGY
PLANT ENGINEERING DIVISION
UPTON, NEW YORK 11973

Giffels, Partnership
25200 Telegraph Road, Suite 200
Southfield, Michigan 48033 USA
Tel. 248-936-8000
Fax 248-936-8111

Approved By: B NEWMAN
Project Manager: G. KAPLAN
Project Engineer/Architect: E. PIENDEL
Project No.: SF070003

JOB TITLE	DWG. TITLE
CENTRAL CHILLED WATER FACILITY PHASE II	FIRE PROTECTION PLANS

ILR,GPP,LNI, HEM	DATE		ACCT. NO.	SHEET OF
SCALE 1/8"=1'-0"	DWN. BY EP	REV'D BY BN	JOB NO. 11705	DWG. NO.
ESHQ RISK LEVEL	APP'D. BY W HARRISON		BLDG. NO. 600	FP-100
PATH:				