Date (mmm dd yyyy)	Issued For	Rev.
09-21-2007	TITLE 1 60% REVIEW	A
07-31-2008	TITLE II DESIGN 90% REVIEW SUBMITTAL	E
08-25-2008	TITLE II DESIGN 100% OWNER REVIEW	F
02-19-2009	TITLE II CONSTRUCTION BID ISSUE	0

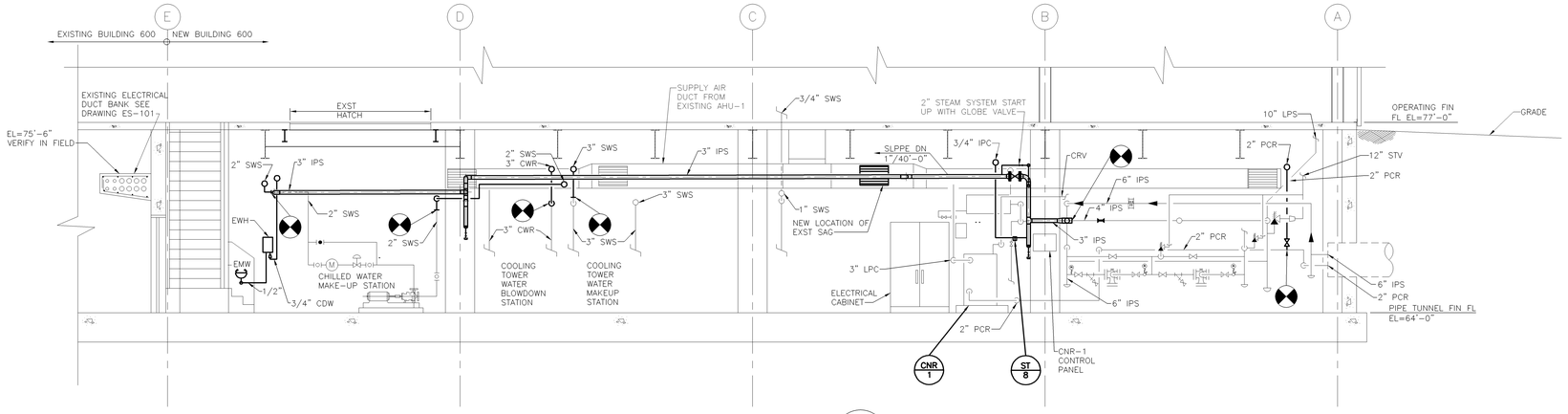

305A SECTION
MP-100 1/4"=1'-0"

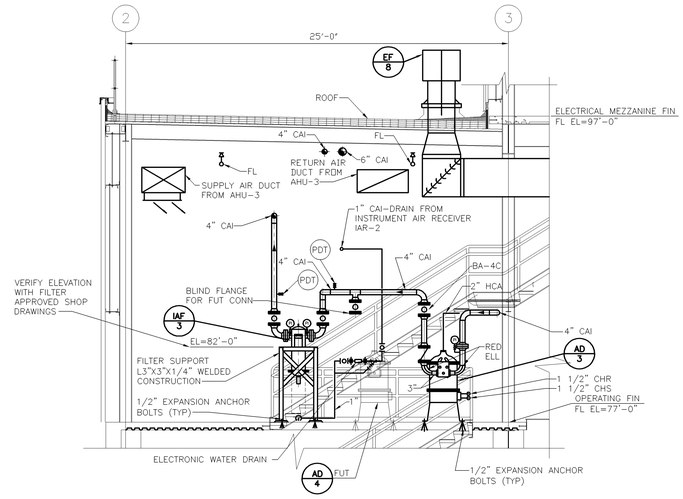

305C SECTION
MP-102 1/4"=1'-0"
MH-101

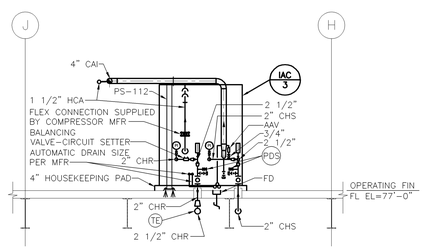

305E SECTION
MP-102 1/4"=1'-0"

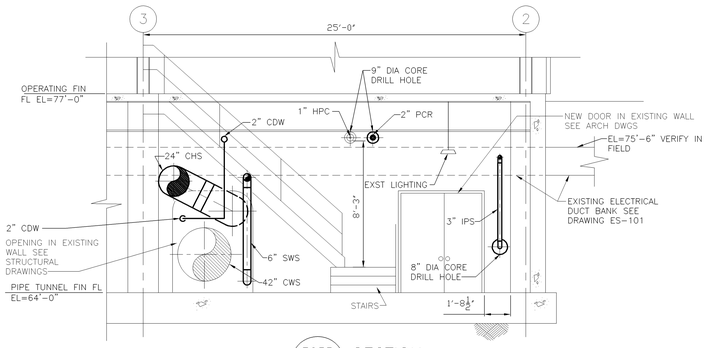

305B SECTION
MP-100 1/4"=1'-0"

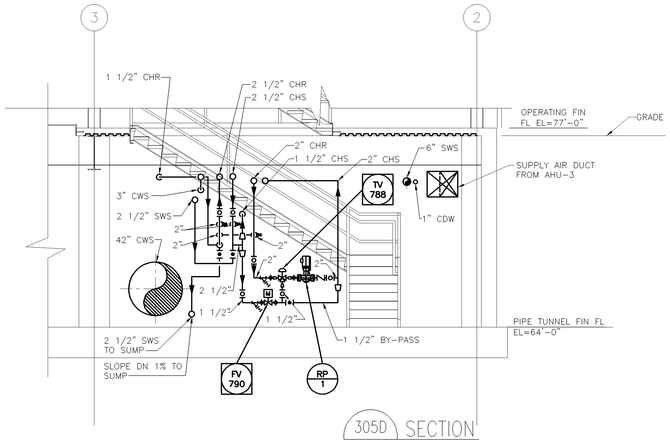

305D SECTION
MP-100 1/4"=1'-0"
MH-100

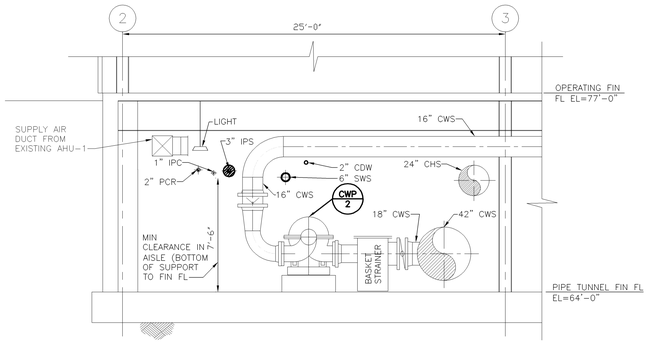

305F SECTION
MP-100 1/4"=1'-0"

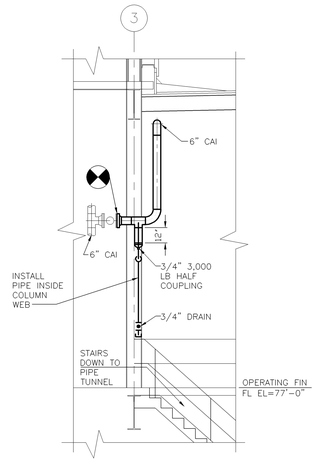

305G SECTION
MP-101 1/4"=1'-0"

This drawing has been prepared solely for the use of Brookhaven National Laboratory and there are no representations of any kind made by Giffels, Partnership to any party with whom Giffels, Partnership has not entered into a contract.

This drawing shall not be used for construction purposes until the seal and signature of the responsible registrant appears on the drawing, and proper permit forms and related fees are transmitted by the Owner, Owner's Agent or Contractor to the Authority Having Jurisdiction.

LEGEND

- EXISTING
- NEW
- FUTURE

GENERAL NOTES:

1. NOT ALL PIPING AND DUCTWORK IS SHOWN IN SECTIONS FOR CLARITY SEE PLAN DRAWINGS FOR ADDITIONAL PIPING AND DUCTWORK.

Giffels, Partnership
25200 Telegraph Road, Suite 200
Southfield, Michigan 48033 USA
Tel. 248-936-8000
Fax 248-936-8111

Approved By: B NEWMAN
Project Manager: G. KAPLAN
Project Engineer/Architect: E PIENDEL
Project No. SF070003

JOB NO.	SHEET	NO	REVISION	DATE	DWN.	APP'D.	QA

BROOKHAVEN NATIONAL LABORATORY
UNDER CONTRACT WITH
UNITED STATES DEPARTMENT OF ENERGY
PLANT ENGINEERING DIVISION
UPTON, NEW YORK 11973

JOB TITLE: CENTRAL CHILLED WATER FACILITY PHASE II
DWG. TITLE: SECTIONS

ILR,GPP,LNI, HEM	DATE		ACCT. NO.	SHEET OF
SCALE 1/4"=1'-0"	DWN. BY EP	REV'D BY EP	JOB NO. 11705	DWG. NO.
ESHQ RISK LEVEL	APP'D. BY W HARRISON		BLDG. NO. 600	MP-305
PATH:				