Date (mmm dd yyyy)	Issued For	Rev.
09-21-2007	TITLE 1 60% REVIEW	A
10-24-2007	TITLE 1 100% COMPLETE	B
12-07-2007	TITLE II DESIGN 30% REVIEW SUBMITTAL	C
03-28-2008	TITLE II DESIGN 60% REVIEW SUBMITTAL	D
07-31-2008	TITLE II DESIGN 90% REVIEW SUBMITTAL	E
08-25-2008	TITLE II DESIGN 100% OWNER REVIEW	F
02-19-2009	TITLE II CONSTRUCTION BID ISSUE	G

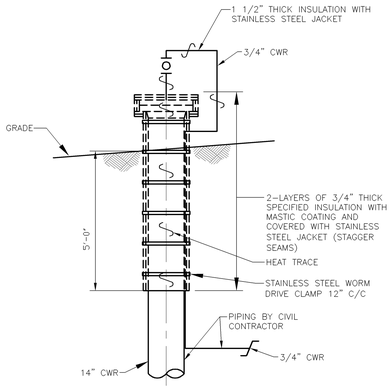

501A DETAIL
MP-105 1/2" = 1'-0"

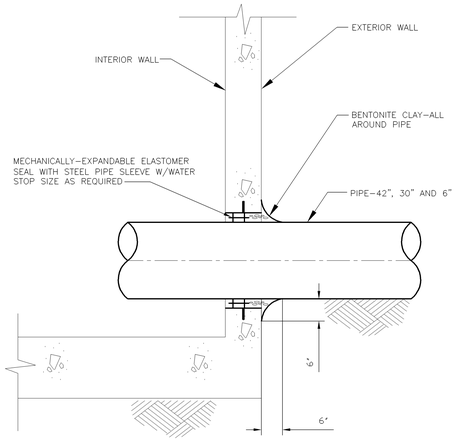

501B DETAIL
MU-100 NO SCALE

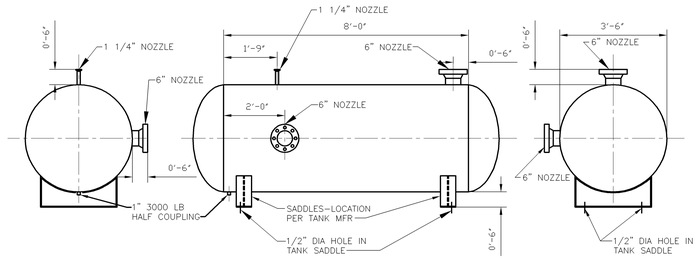

501C INSTRUMENT AIR RECEIVER DETAIL
MP-102 1/2" = 1'-0"

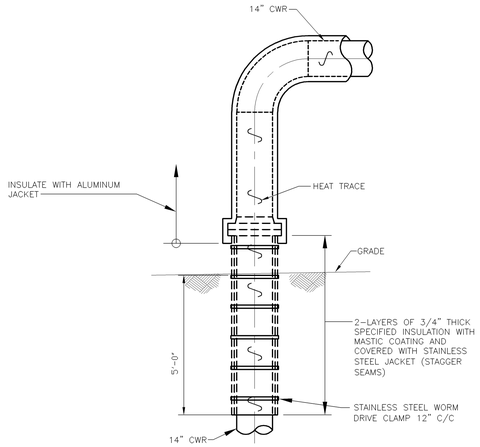

501D DETAIL
MP-105 1/2" = 1'-0"

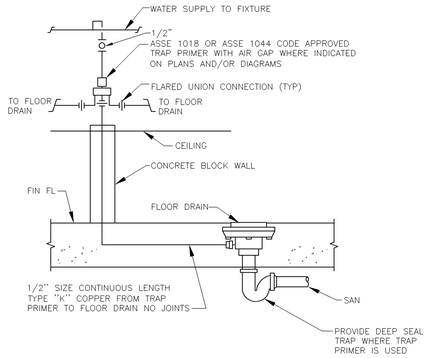

NOTE:
1. PROVIDE ACCESS DOOR WHERE TRAP PRIMER IS TO BE CONCEALED IN WALL AND COORDINATE WITH ARCH

501L DETAIL
MU-100 NO SCALE

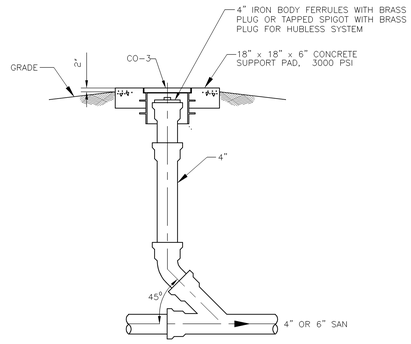

501M DETAIL
MU-105 NO SCALE

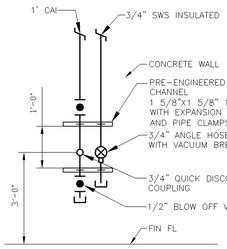

ELEVATION

501E DETAIL
MP-100 1/2" = 1'-0"

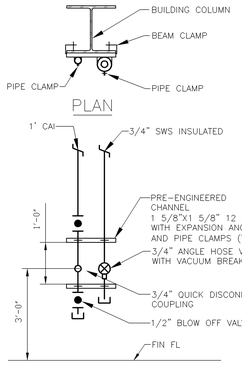

PLAN

ELEVATION

501F DETAIL
MP-102 1/2" = 1'-0"

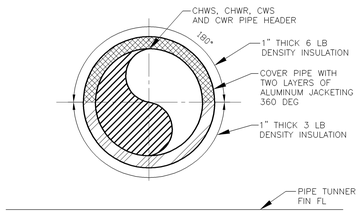

NOTE:
1. INSULATE AS INDICATED ENTIRE LENGTH OF NEW HEADER.

501G DETAIL
MP-100 1/2" = 1'-0"

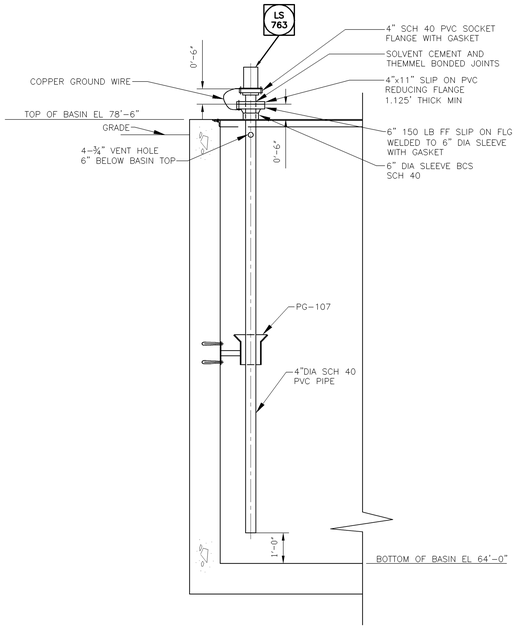

501H DETAIL
MP-105 NO SCALE

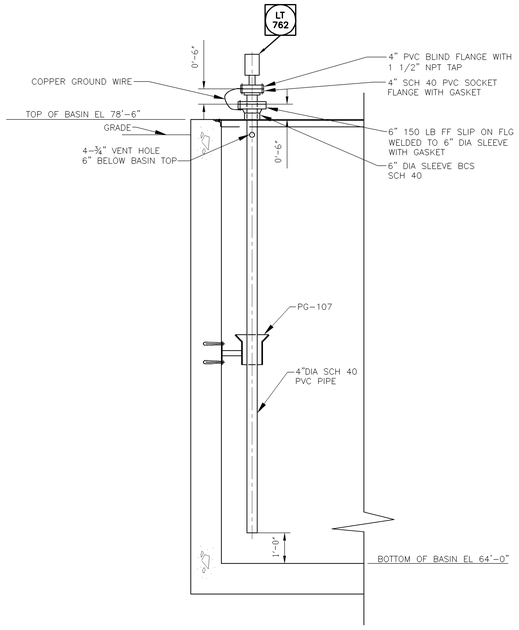

501J DETAIL
MP-105 NO SCALE

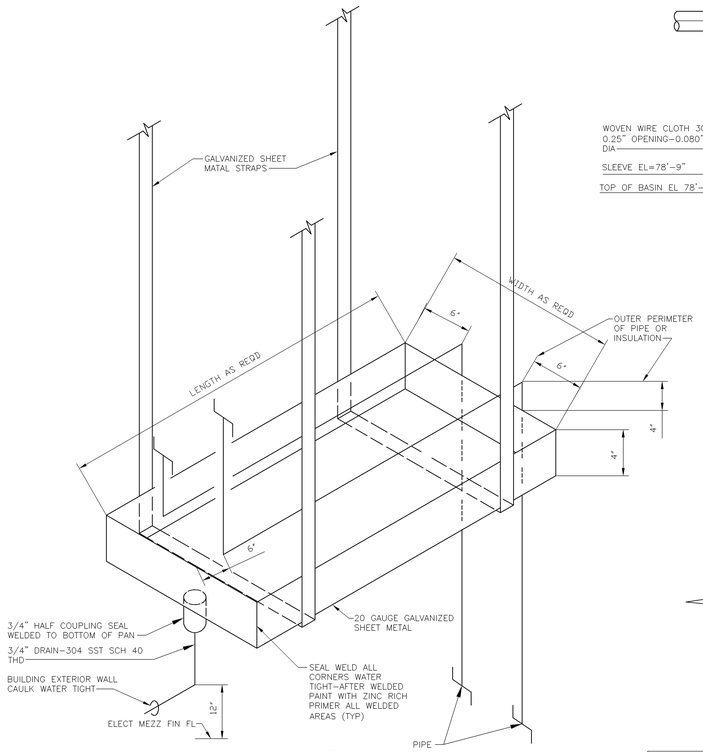

501K DRIP PAN DETAIL
MP-103
MH-102
NO SCALE

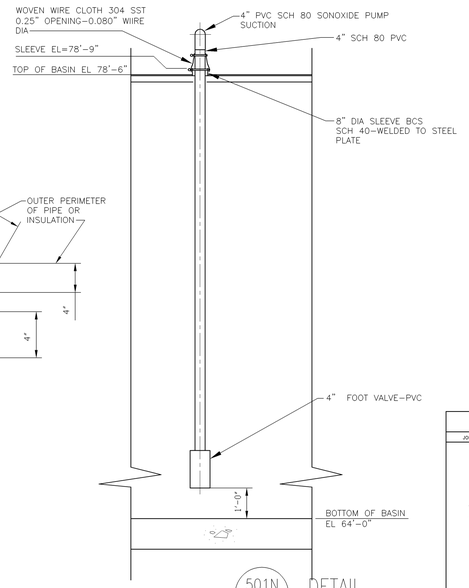

501N DETAIL
MP-105 NO SCALE

This drawing has been prepared solely for the use of Brookhaven National Laboratory, and there are no representations of any kind made by Giffels, Partnership to any party with whom Giffels, Partnership has not entered into a contract.

This drawing shall not be used for construction purposes until the seal and signature of the responsible registrant appears on the drawing, and proper permit forms and related fees are transmitted by the Owner, Owner's Agent or Contractor to the Authority Having Jurisdiction.

JOB NO.	SHEET NO.	REVISION	DATE	DWN.	APP'D.	QA
		A				

BROOKHAVEN NATIONAL LABORATORY
UNDER CONTRACT WITH
UNITED STATES DEPARTMENT OF ENERGY
PLANT ENGINEERING DIVISION
UPTON, NEW YORK 11973

Giffels, Partnership
25200 Telegraph Road, Suite 200
Southfield, Michigan 48033 USA
Tel: 248-936-8000
Fax 248-936-8111

Approved By: B NEWMAN
Project Manager: G. KAPLAN
Project Engineer/Architect: E PIENDEL
Project No. SF070003

JOB TITLE: CENTRAL CHILLED WATER FACILITY PHASE II		DWG. TITLE: DETAILS	
ILR,GPP,LNI, HEM	DATE	ACCT. NO.	SHEET OF
SCALE: AS NOTED	DWN. BY: EP / RED'D BY: BN	JOB NO.: 11705	DWG. NO.
ESHQ RISK LEVEL	APP'D. BY: W HARRISON	BLDG. NO.: 600	MP-501
PATH:			