Brookhaven National Laboratory
Plant Engineering - E&CS Division
Engineering Change Notice Form

PROJECT: CCWF II **JOB No.** 11705

ECN Title: **Chiller mtr, pump mtrs, and cooling tower fan mtrs nameplate data** **ECN No.**46

Affected Documents: E-601, E-603, E-606

Requested Change (Attach sketch if applicable): Show actual nameplate motor RLA, LRA, & kW for Chiller motors CHL-5 & CHL-6 on drawings. Show actual nameplate motor RLA for PCHP-8, PCHP-9, CHP-5, CHP-6, CWP-5, CWP-6, CTC-5, & CTC-6 on drawings.

Requested by: Ed Irwin Date: 7-26-10

Resolution:

Approvals: A/E or Proj. Eng.: Dennis Danseglio Date: 8/16/2010

Project Coordinator: Alan Raphael Date: 8/17/10

Manager: Date:

Contractor shall take the following action:

- ☐ Await change order from P&PM
- ☒ Proceed with change as described
- ☐ Provide cost proposal for change as described

Distribution:

E. W. Howell	Giffels	PPM
E&U	MPO	
O&M	DOE	
NSLS II	ECN File	

PART OF DWG E-601

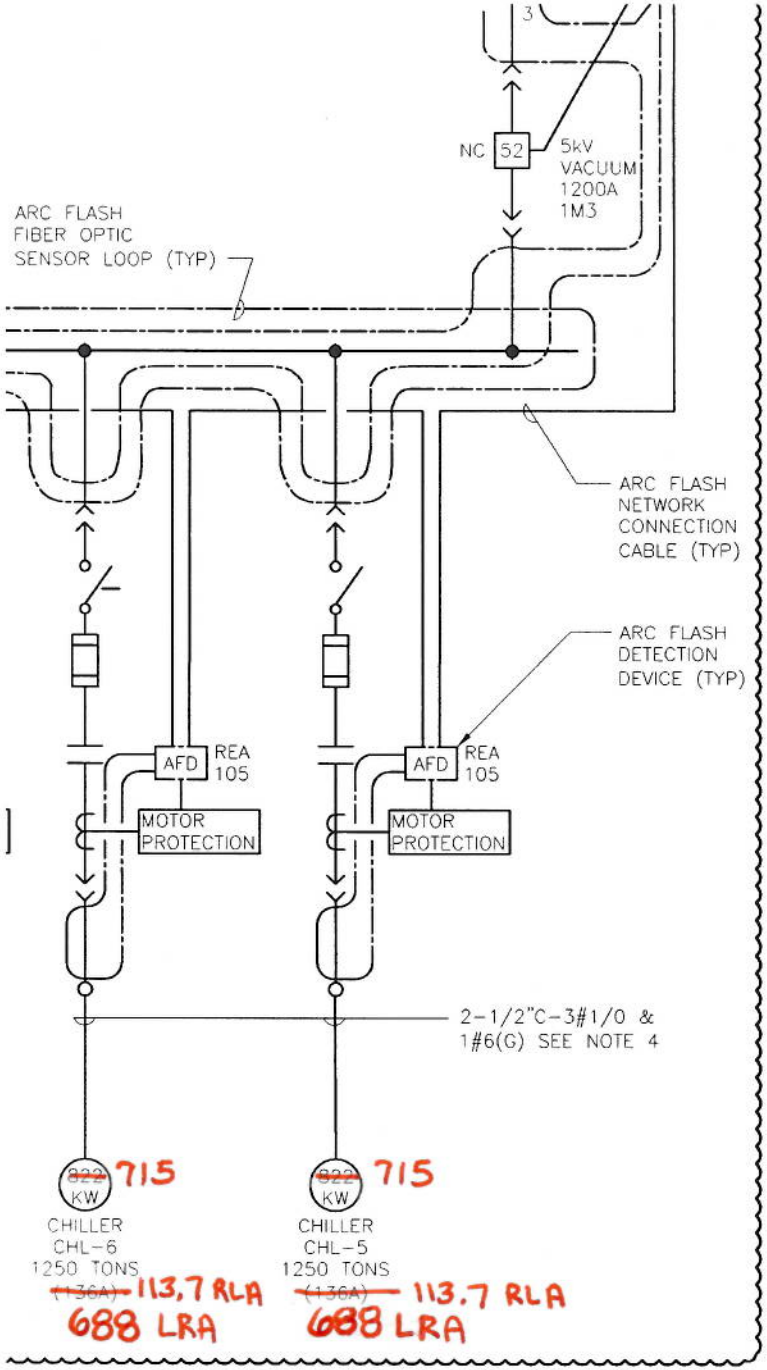

ONE LINE DIAGRAM

SCALE NONE

PART OF DWG E-603

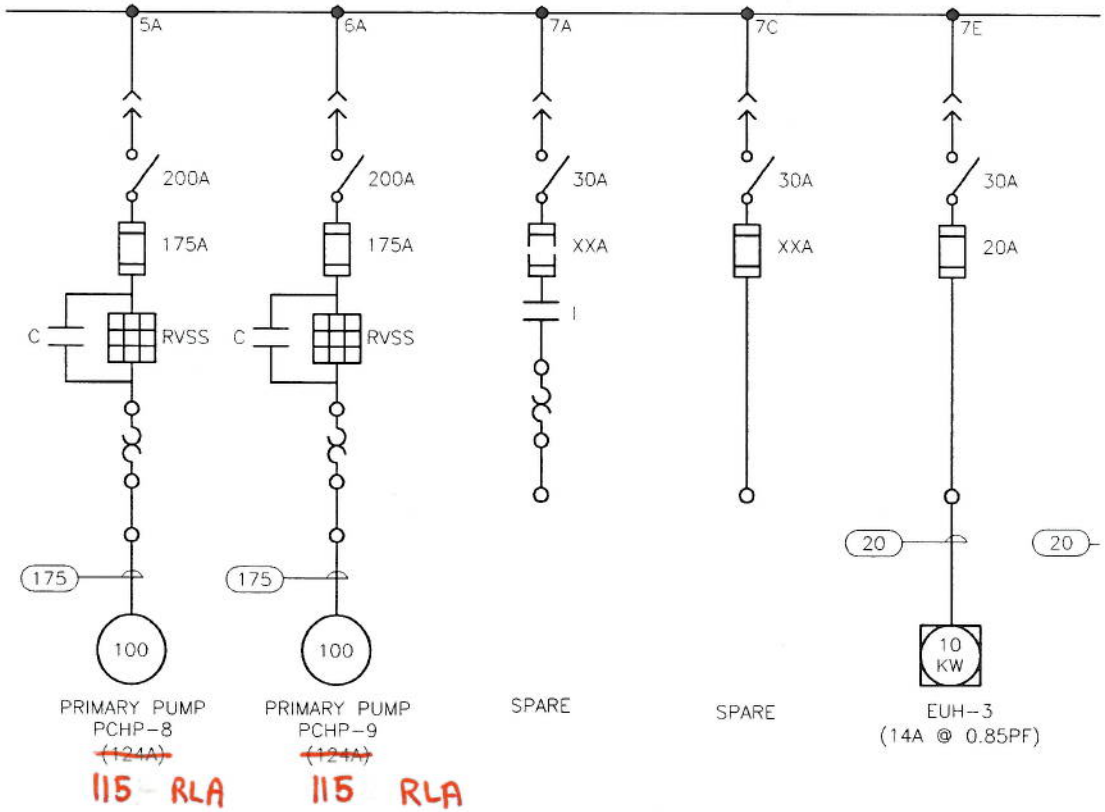

MCC-600A-2 ONE LINE DIAGRAM

SCALE: NONE

PART OF DWG E-606

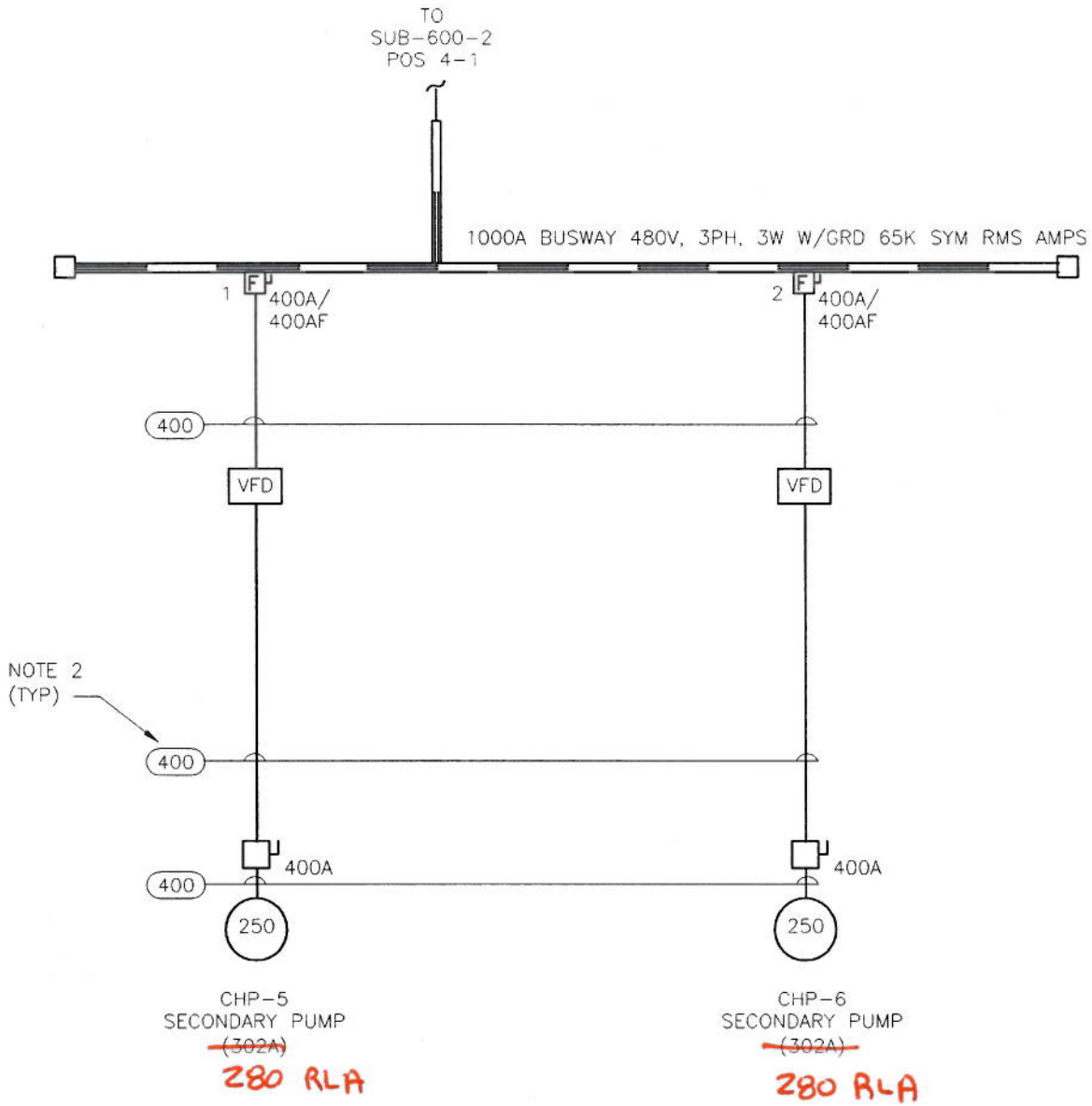

BUSWAY BW-600-4 ONE LINE DIAGRAM

SCALE: NONE

PART OF DWG E-606

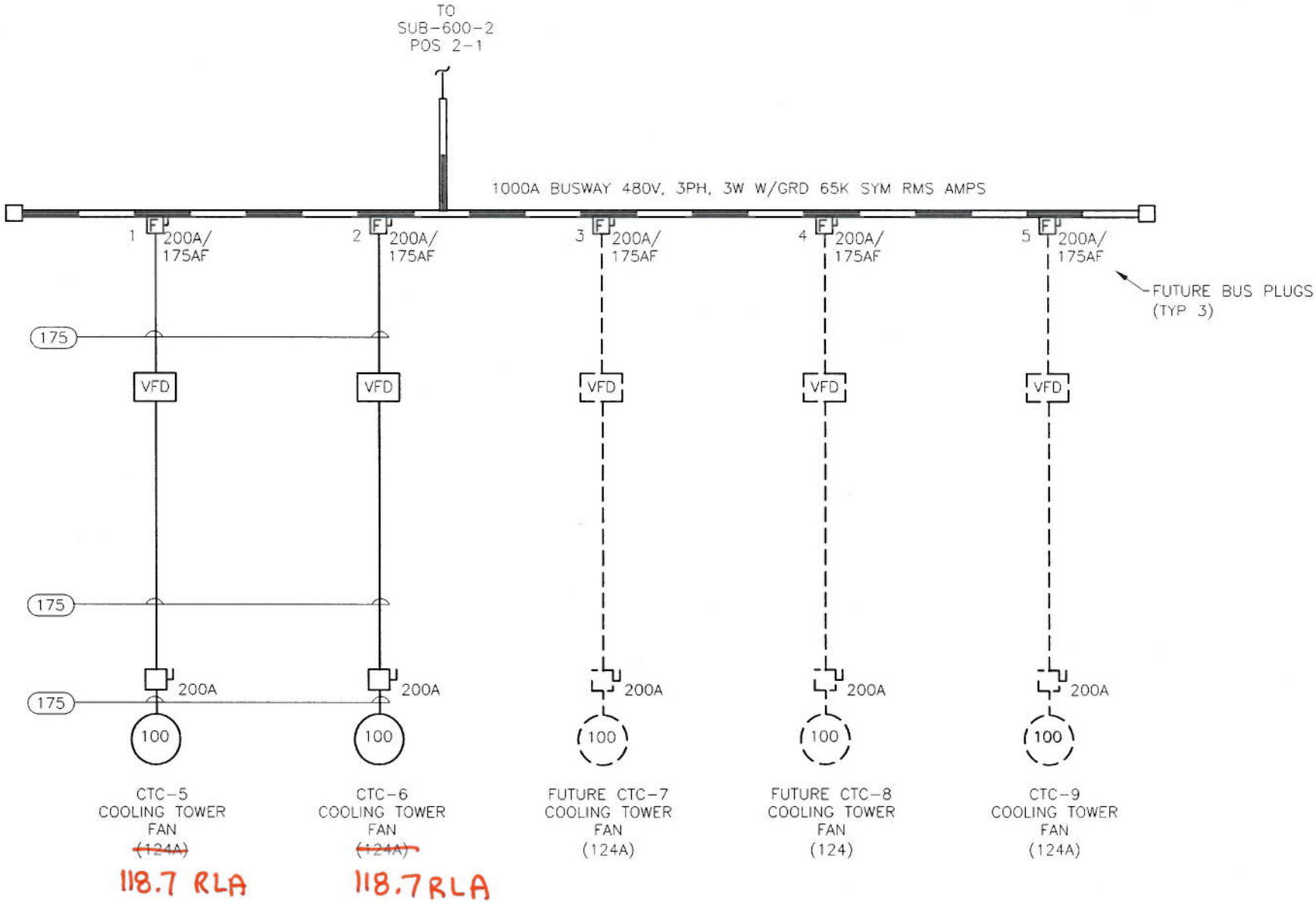

BUSWAY BW-600-6 ONE LINE DIAGRAM

SCALE: NONE

PART OF DWG E-606

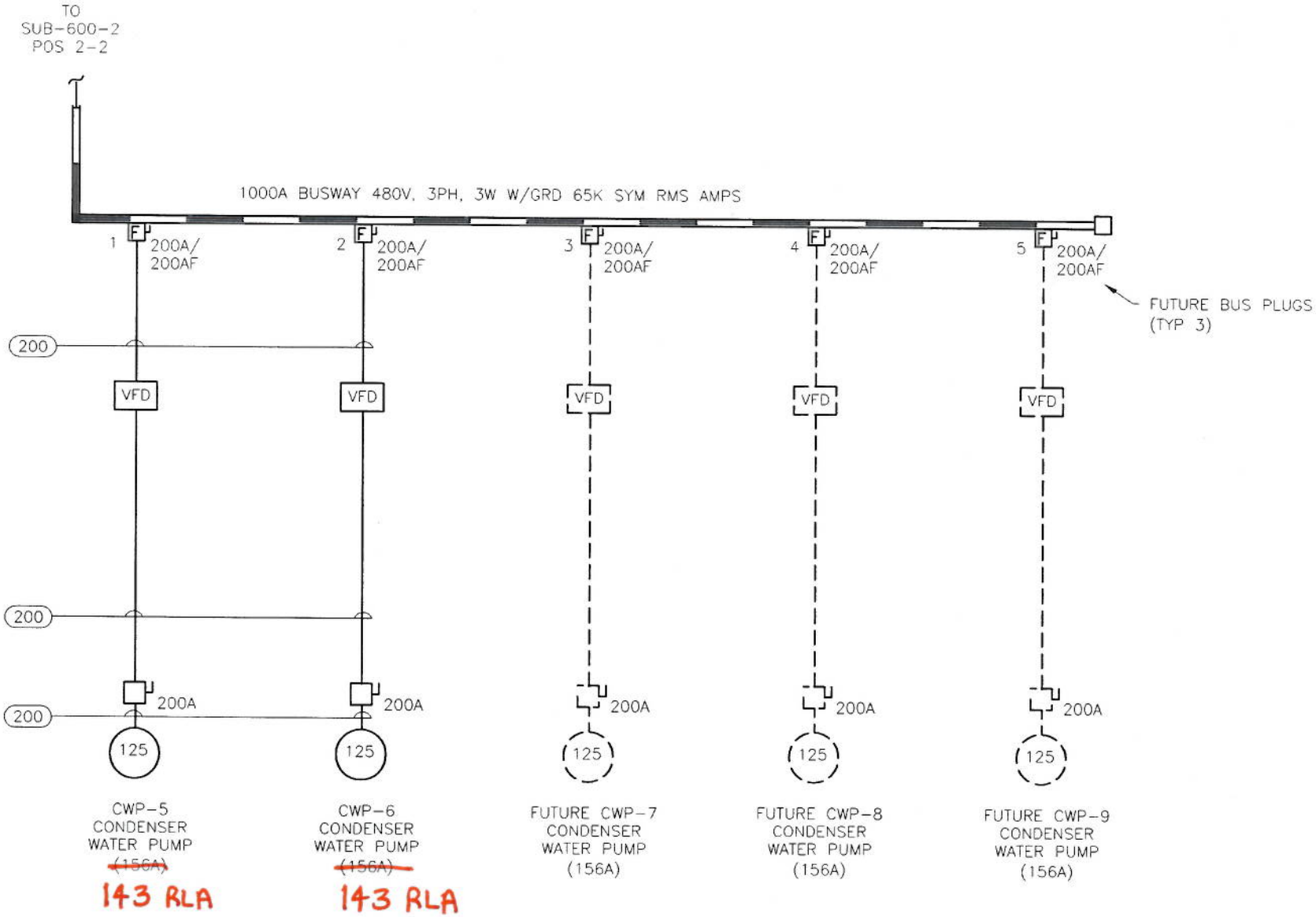

BUSWAY BW-600-7 ONE LINE DIAGRAM

SCALE: NONE