Brookhaven National Laboratory
Plant Engineering - E&CS Division
Engineering Change Notice Form

PROJECT: CCWF II **JOB No.** 11705

ECN Title: MCC-600-3, EF-6 **ECN No.** 48

Affected Documents: E-604

Requested Change (Attach sketch if applicable): Delete 30A local disconnect switch at EF-6. Wire from MCC-600-3 starter bucket directly to EF-6. There is no where to mount the disconnect switch, and NEC 430.102(B)(1) & (2) Exception (a) & (b) allows the motor disconnect to be deleted as long as the controller disconnect is capable of being locked in the open position.

Requested by: E. Irwin Date: 8-25-10

Resolution: (See attached sketch)

Approvals: A/E or Proj. Eng.: D. Danseglio Date: 8/26/2010

Project Coordinator: A. Raphael Date: 8/26/10

Manager: Date:

Contractor shall take the following action:

- ☐ Await change order from P&PM
- ☒ Proceed with change as described
- ☒ Provide cost proposal for change as described

Distribution:

E. W. Howell	Giffels	PPM
E&U	MPO	
O&M	DOE	
NSLS II	ECN File	

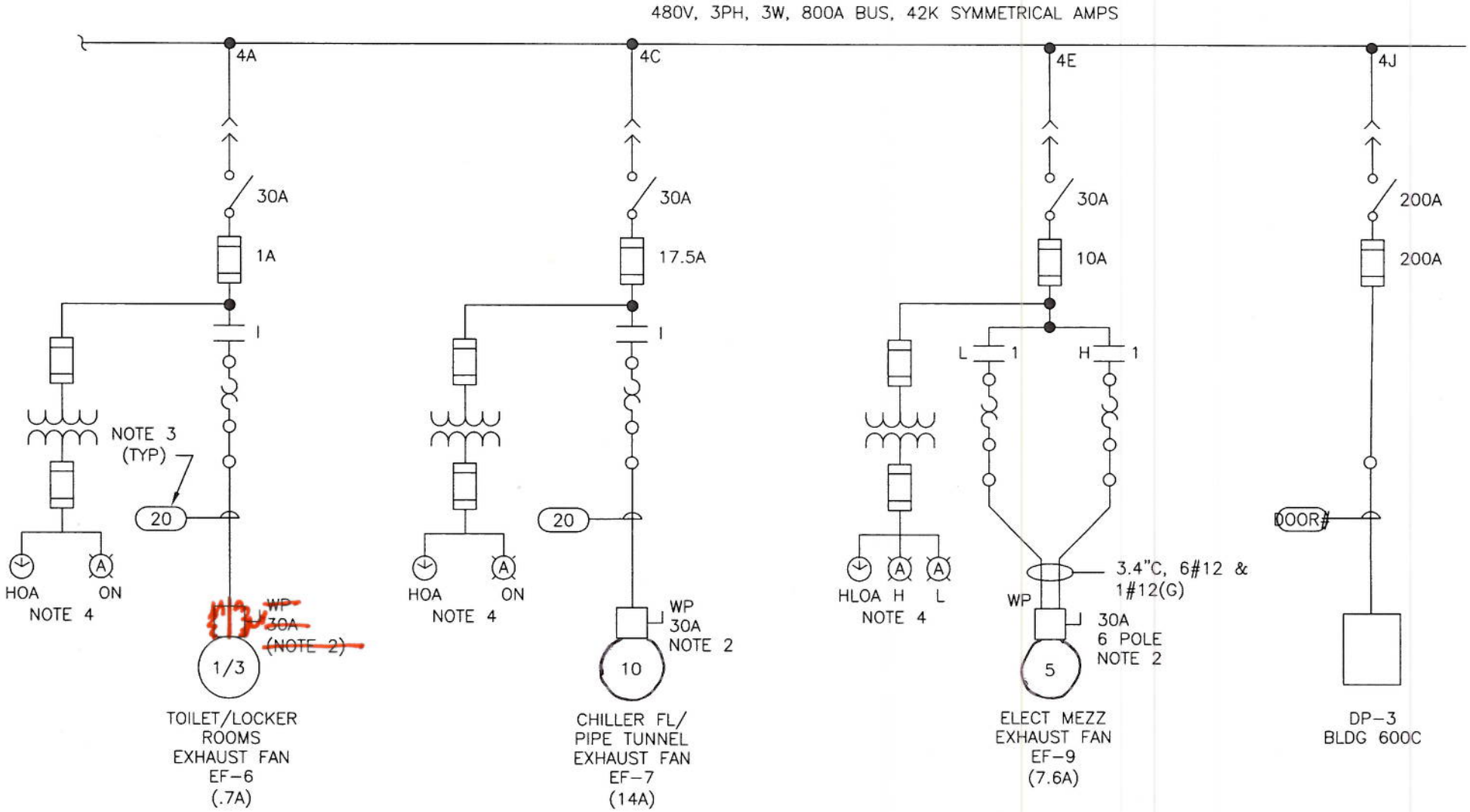

MCC-600-3 ONE LINE DIAGRAM

SCALE: NONE