Brookhaven National Laboratory
Plant Engineering - E&CS Division
Engineering Change Notice Form

PROJECT: CCWF II **JOB No.** 11705

ECN Title: Trane Chiller Remote Starter **ECN No.** 56A

Affected Documents:. Spec. 15652, Giffels Submittal 72145; E.W. Howell submittal 15652-004. GE Dwg. 1043930101, Sh 17, R2 (GE Power Vac Cab.), GE Dwg. 34036168, Sh 4, 2/17/2010 (GE 4kV Starter), Trane Dwg. Master 23097550, Rev. C, Trane Engrg. Spec. S6516-0516, Rev. H.

Requested Change (Attach sketch if applicable): Clarify interconnection requirements for Chillers 600CHL-5, 600CHL-6 remote starters based on Trane shop drawing submittals.

Requested by: E.W. Howell; prepared by John P. Perkins, PE Date: 14-Apr-11

Resolution: Refer to attached Circuit Wiring Diagrams ECN-56-E1 (Chiller 5) and ECN-56-2 (Chiller 6).

Approvals: A/E or Proj. Eng.: Date: 4/15/11

Project Coordinator: Date: 4/15/11

Manager: Date:

Contractor shall take the following action:

- ☐ Await change order from P&PM
- ☐ Proceed with change as described
- ☐ Provide cost proposal for change as described

Distribution:

E. W. Howell	Giffels	PPM
E&U	MPO	
O&M	DOE	
NSLS II	ECN File	

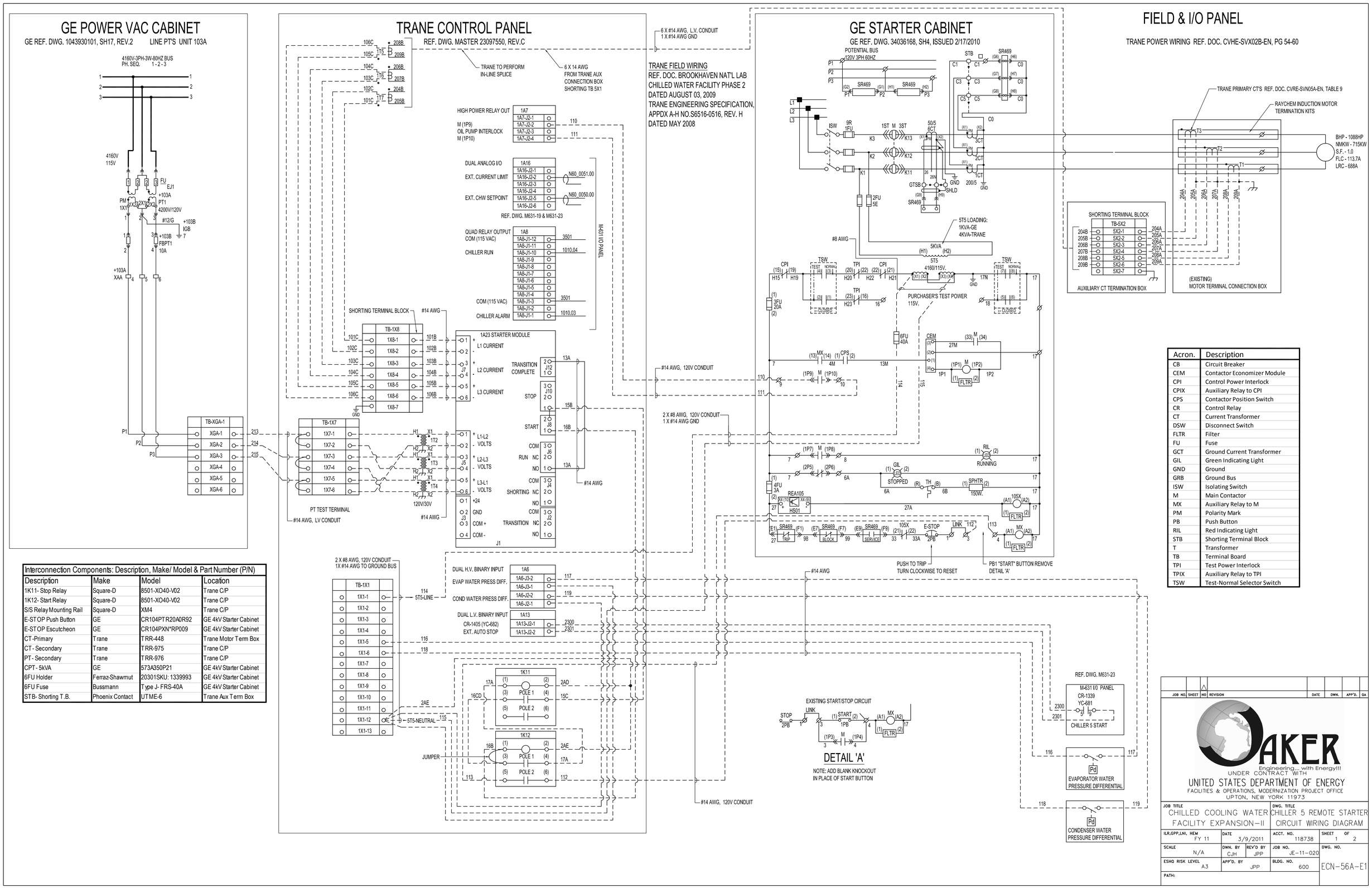

Acron.	Description
CB	Circuit Breaker
CEM	Contactor Economizer Module
CPI	Control Power Interlock
CPIX	Auxiliary Relay to CPI
CPS	Contactor Position Switch
CR	Control Relay
CT	Current Transformer
DSW	Disconnect Switch
FLTR	Filter
FU	Fuse
GCT	Ground Current Transformer
GIL	Green Indicating Light
GND	Ground
GRB	Ground Bus
ISW	Isolating Switch
M	Main Contactor
MX	Auxiliary Relay to M
PM	Polarity Mark
PB	Push Button
RIL	Red Indicating Light
STB	Shorting Terminal Block
T	Transformer
TB	Terminal Board
TPI	Test Power Interlock
TPIX	Auxiliary Relay to TPI
TSW	Test-Normal Selector Switch

Interconnection Components: Description, Make/ Model & Part Number (P/N)			
Description	Make	Model	Location
1K11- Stop Relay	Square-D	8501-XO40-V02	Trane C/P
1K12- Start Relay	Square-D	8501-XO40-V02	Trane C/P
S/S Relay Mounting Rail	Square-D	XM4	Trane C/P
E-STOP Push Button	GE	CR104PTR20A0R92	GE 4kV Starter Cabinet
E-STOP Escutcheon	GE	CR104PXN*RP009	GE 4kV Starter Cabinet
CT-Primary	Trane	TRR-448	Trane Motor Term Box
CT - Secondary	Trane	TRR-975	Trane C/P
PT - Secondary	Trane	TRR-976	Trane C/P
CPT - 5kVA	GE	573A350P21	GE 4kV Starter Cabinet
6FU Holder	Ferraz-Shawmut	20301SKU: 1339993	GE 4kV Starter Cabinet
6FU Fuse	Bussmann	Type J- FRS-40A	GE 4kV Starter Cabinet
STB- Shorting T.B.	Phoenix Contact	UTME-6	Trane Aux Term Box

JOB NO.	SHEET	NO	REVISION	DATE	DWN.	APP'D.	QA

BAKER Engineering... with Energy!!!
UNDER CONTRACT WITH
UNITED STATES DEPARTMENT OF ENERGY
FACILITES & OPERATIONS, MODERNIZATION PROJECT OFFICE
UPTON, NEW YORK 11973

JOB TITLE	DWG. TITLE
CHILLED COOLING WATER FACILITY EXPANSION–II	CHILLER 5 REMOTE STARTER CIRCUIT WIRING DIAGRAM

ILR,GPP,LNI, HEM	DATE		ACCT. NO.	SHEET	OF
FY 11	3/9/2011		118738	1	2
SCALE	DWN. BY	REV'D BY	JOB NO.	DWG. NO.	
N/A	CJH	JPP	JE–11–020	ECN–56A–E1	
ESHQ RISK LEVEL	APP'D. BY		BLDG. NO.		
A3	JPP		600		
PATH:					

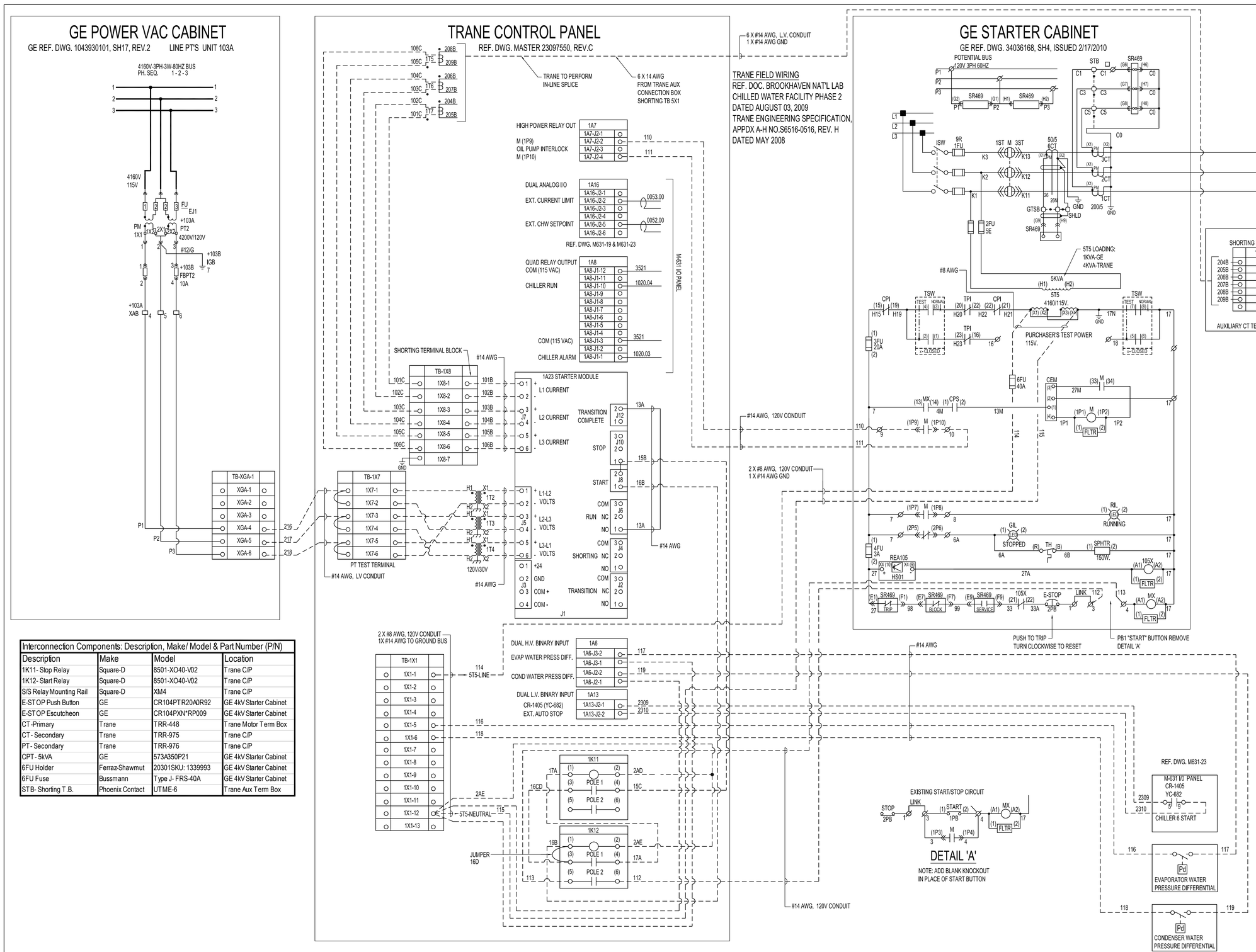

Acron.	Description
CB	Circuit Breaker
CEM	Contactor Economizer Module
CPI	Control Power Interlock
CPIX	Auxiliary Relay to CPI
CPS	Contactor Position Switch
CR	Control Relay
CT	Current Transformer
DSW	Disconnect Switch
FLTR	Filter
FU	Fuse
GCT	Ground Current Transformer
GIL	Green Indicating Light
GND	Ground
GRB	Ground Bus
ISW	Isolating Switch
M	Main Contactor
MX	Auxiliary Relay to M
PM	Polarity Mark
PB	Push Button
RIL	Red Indicating Light
STB	Shorting Terminal Block
T	Transformer
TB	Terminal Board
TPI	Test Power Interlock
TPIX	Auxiliary Relay to TPI
TSW	Test-Normal Selector Switch

Interconnection Components: Description, Make/ Model & Part Number (P/N)

Description	Make	Model	Location
1K11- Stop Relay	Square-D	8501-XO40-V02	Trane C/P
1K12- Start Relay	Square-D	8501-XO40-V02	Trane C/P
S/S Relay Mounting Rail	Square-D	XM4	Trane C/P
E-STOP Push Button	GE	CR104PTR20A0R92	GE 4kV Starter Cabinet
E-STOP Escutcheon	GE	CR104PXN*RP009	GE 4kV Starter Cabinet
CT-Primary	Trane	TRR-448	Trane Motor Term Box
CT- Secondary	Trane	TRR-975	Trane C/P
PT- Secondary	Trane	TRR-976	Trane C/P
CPT- 5kVA	GE	573A350P21	GE 4kV Starter Cabinet
6FU Holder	Ferraz-Shawmut	20301SKU: 1339993	GE 4kV Starter Cabinet
6FU Fuse	Bussmann	Type J- FRS-40A	GE 4kV Starter Cabinet
STB- Shorting T.B.	Phoenix Contact	UTME-6	Trane Aux Term Box

JOB NO.	SHEET	NO	REVISION	DATE	DWN.	APP'D.	QA

OAKER Engineering... with Energy!!!

UNDER CONTRACT WITH
UNITED STATES DEPARTMENT OF ENERGY
FACILITIES & OPERATIONS, MODERNIZATION PROJECT OFFICE
UPTON, NEW YORK 11973

JOB TITLE	CHILLED COOLING WATER FACILITY EXPANSION–II
DWG. TITLE	CHILLER 6 REMOTE STARTER CIRCUIT WIRING DIAGRAM
ILR,GPP,LNI, HEM	FY 11
DATE	3/9/2011
ACCT. NO.	118738
SHEET	2 OF 2
SCALE	N/A
DWN. BY	CJH
REV'D BY	JPP
JOB NO.	JE–11–020
DWG. NO.	ECN–56A–E2
ESHQ RISK LEVEL	A3
APP'D. BY	JPP
BLDG. NO.	600
PATH:	