Brookhaven National Laboratory
Plant Engineering - E&CS Division
Engineering Change Notice Form

PROJECT: CCWF II **JOB No.** 11705

ECN Title: Substation 600-B **ECN No.** 62

Affected Documents: CE-03, CE-05, ES-101, ES-402, ES-403

Requested Change (Attach sketch if applicable):

Haunches around the perimeter of the switchgear pad and transformer pad, not installed. Revisions were made to the grounding, conduit runs, gate width and location of the switchgear pad.

Requested by: A. Raphael Date: 06/04/10

Resolution: See the attached sketch.

Approvals: A/E or Proj. Eng.: B.Kimble Date: 01/07/11

Project Coordinator: A. Raphael Date: 01/07/11

Manager: Date:

Contractor shall take the following action:

- ☐ Await change order from P&PM
- ☒ Proceed with change as described
- ☐ Provide cost proposal for change as described

Distribution:

E. W. Howell	Giffels	PPM
E&U	MPO	
O&M	DOE	
NSLS II	ECN File	

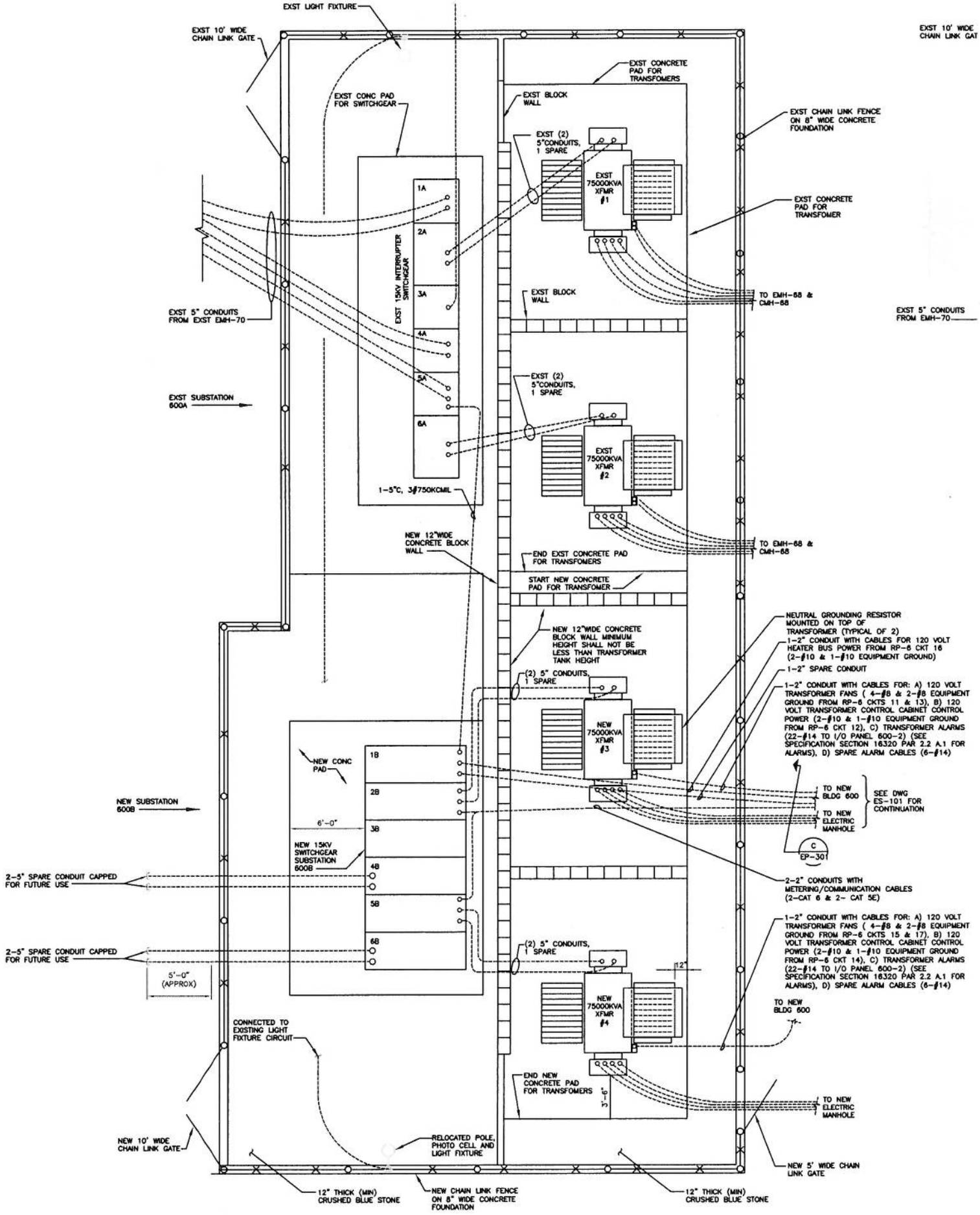

402B ENLARGED PLAN SITE SUBSTATIONS 600A & 600B

ES-101 1/4" = 1'-0"

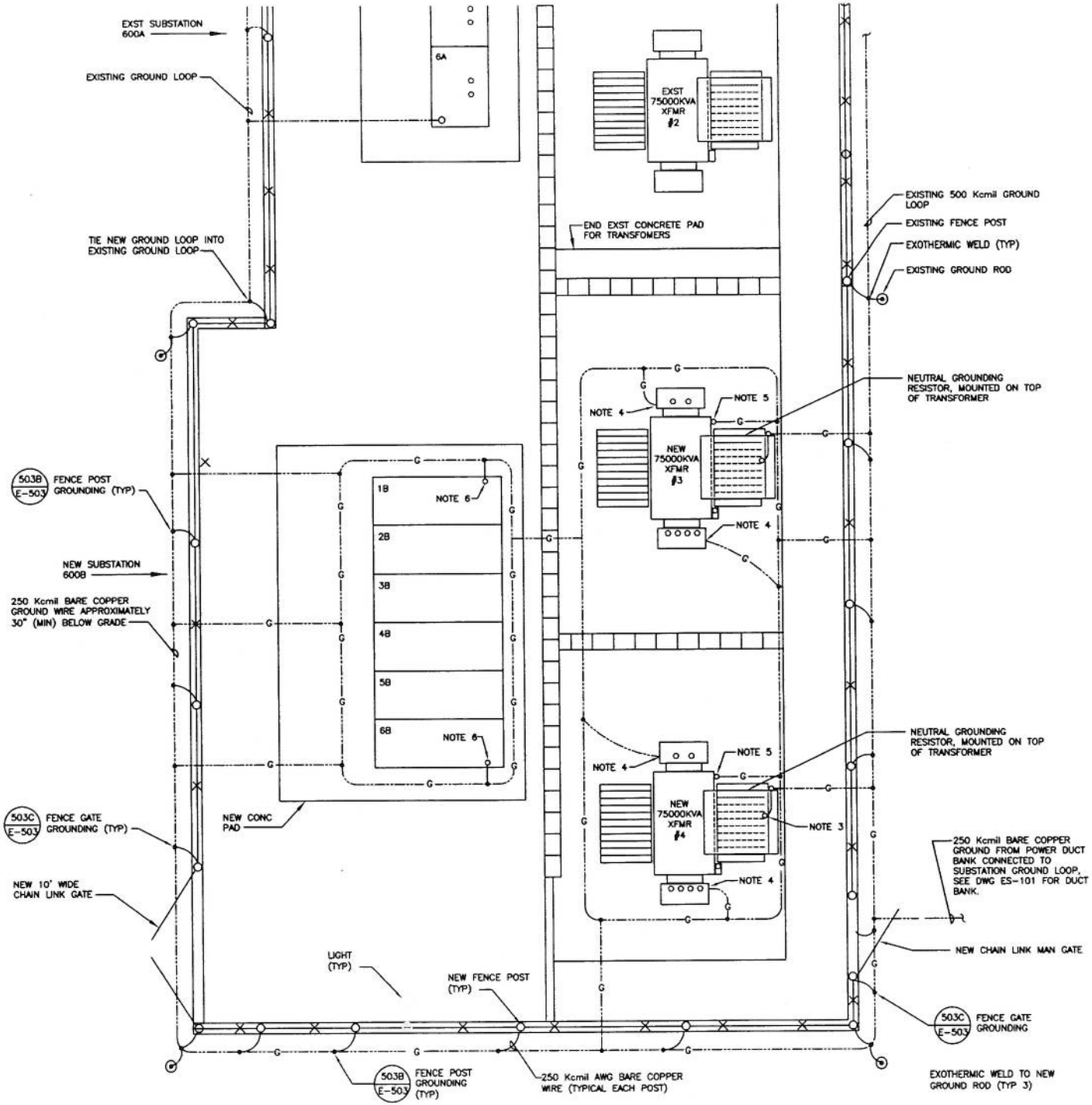

403A ENLARGED PLAN SITE GROUNDING

ES-101 1/4" = 1'-0"

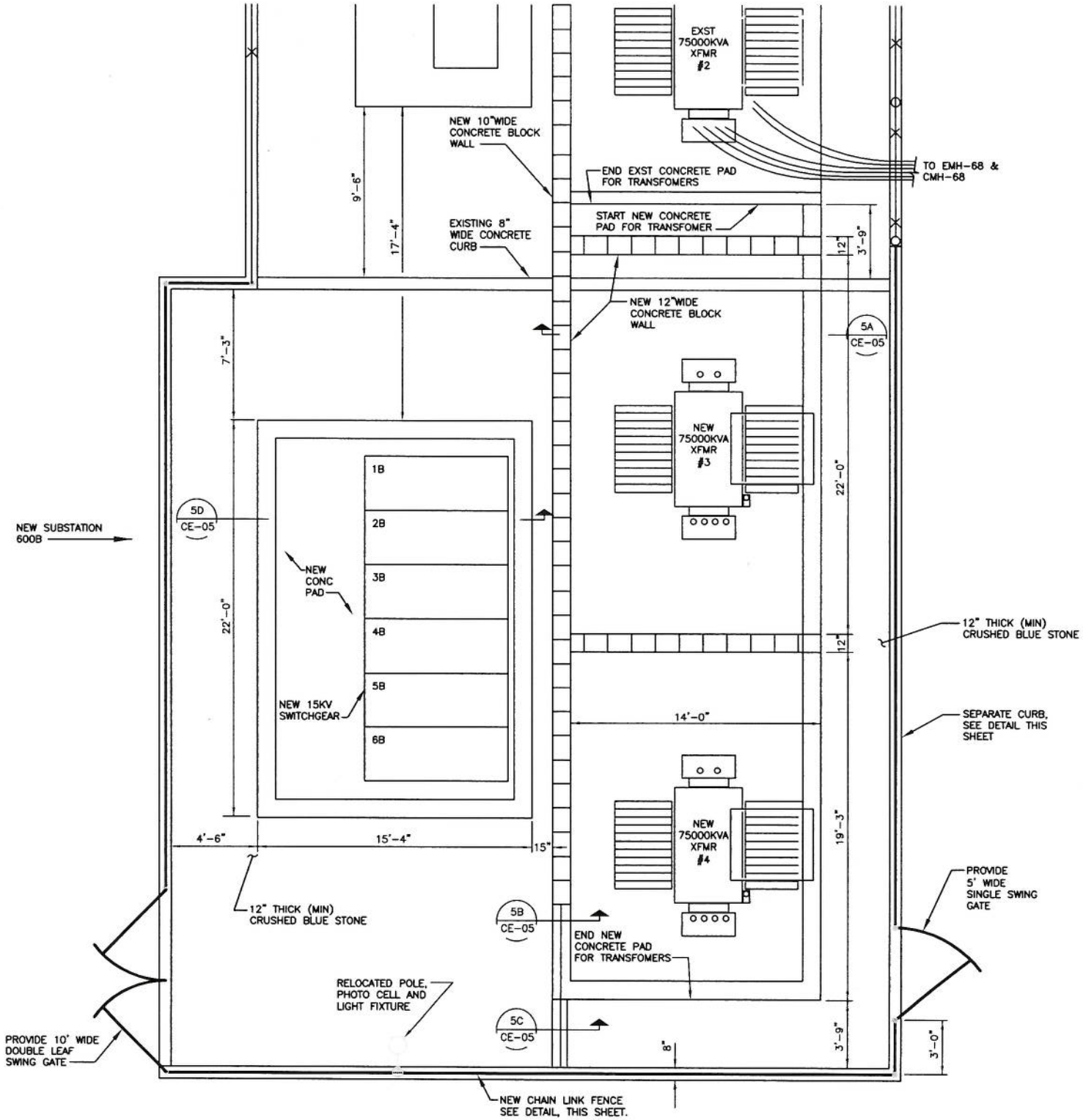
EXST
75000KVA
XFMR
#2
NEW 10"WIDE
CONCRETE BLOCK
WALL
END EXST CONCRETE PAD
FOR TRANSFOMERS
TO EMH-68 &
CMH-68
START NEW CONCRETE
PAD FOR TRANSFOMER
EXISTING 8"
WIDE CONCRETE
CURB
9'-6"
17'-4"
12"
3'-9"
NEW 12"WIDE
CONCRETE BLOCK
WALL
5A
CE-05
7'-3"
NEW
75000KVA
XFMR
#3
22'-0"
1B
2B
3B
4B
5B
6B
5D
CE-05
NEW SUBSTATION
600B
NEW
CONC
PAD
NEW 15KV
SWITCHGEAR
12" THICK (MIN)
CRUSHED BLUE STONE
14'-0"
SEPARATE CURB,
SEE DETAIL THIS
SHEET
NEW
75000KVA
XFMR
#4
19'-3"
4'-6"
15'-4"
15"
PROVIDE
5' WIDE
SINGLE SWING
GATE
12" THICK (MIN)
CRUSHED BLUE STONE
5B
CE-05
END NEW
CONCRETE PAD
FOR TRANSFOMERS
RELOCATED POLE,
PHOTO CELL AND
LIGHT FIXTURE
5C
CE-05
8"
3'-9"
3'-0"
PROVIDE 10' WIDE
DOUBLE LEAF
SWING GATE
NEW CHAIN LINK FENCE
SEE DETAIL, THIS SHEET.

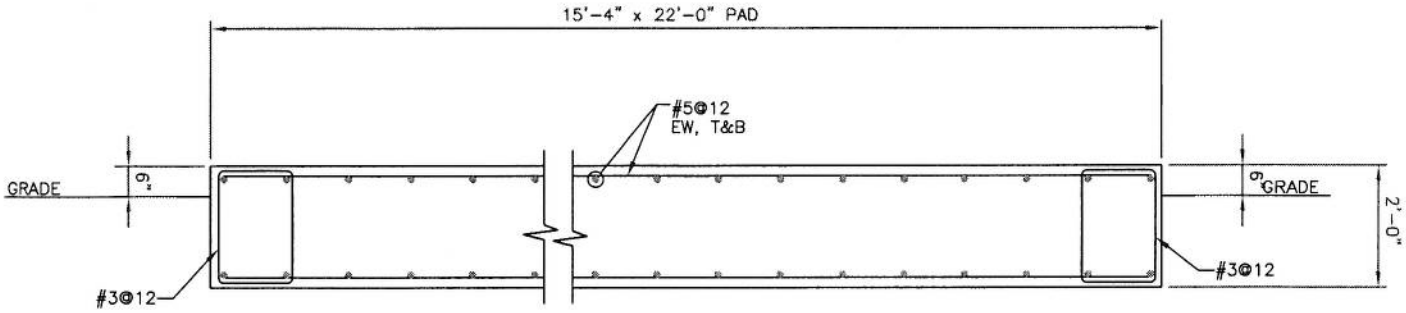

5D SECTION
CE-05 1/2" = 1'-0"

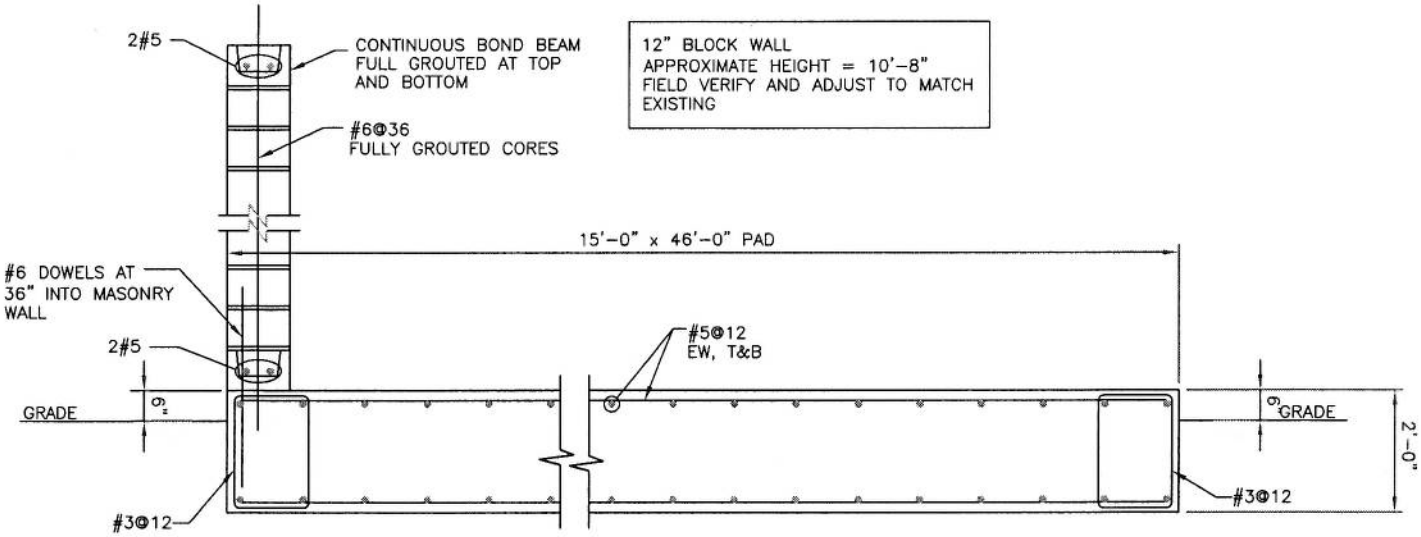

5A SECTION
CE-05 1/2" = 1'-0"

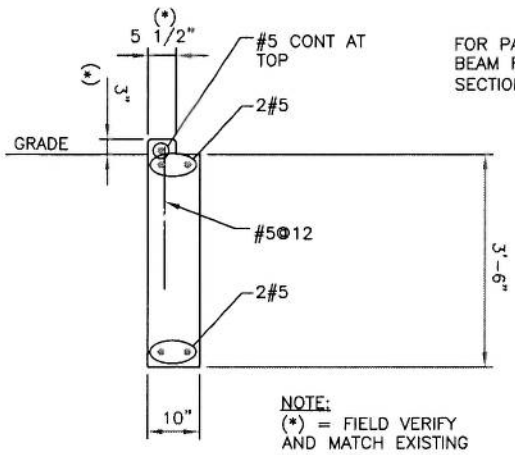

5C SECTION
CE-05 1/2" = 1'-0"

FOR PAD AND GRADE
BEAM REINFORCEMENT SEE
SECTION "5A" THIS SHEET

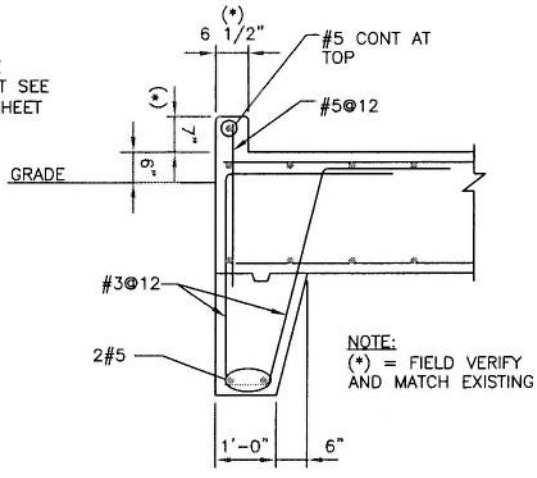

5B SECTION
CE-05 1/2" = 1'-0"