Specifications For

Brookhaven National Laboratory
Central Chilled Water Facility Phase II
Upton, New York
Job No. 11705

Title II Construction Bid Issue
February 19, 2009

Giffels, Partnership / IBI Group Project: SF070003

Prepared For:
Brookhaven National Laboratory
Upton, New York 11973

Prepared By:

Giffels, Partnership / IBI Group

25200 Telegraph Road, Suite 200, Southfield, Michigan 48033
P: (248) 936-8000; F: (248) 936-8111

This page intentionally left blank

Specifications for

Central Chilled Water Facility Phase II

(CCWF - II)

Brookhaven National Laboratory
Upton, New York Job. No. 11705

February 19, 2009

Giffels, Partnership / IBI Group

ESH&Q Risk Level Low (A3-Minor) Specification No. 11705

Brookhaven National Lab
Central Chilled Water Fac Ph II Exp

Project Manager: Kaplan, G

Specification Section Number	Title
Project Manual	
__Cover	Cover
__TitlePage	Title Page
__TOC	Table of Contents
Bidding Requirements, Contract Forms, and Conditions of the Contract	
00220	Soil Exploration Data
00220A	Appendix A - Soil Boring Logs
00700	General Conditions
00800	Supplementary Conditions
00800A	Work Permit
General Requirements	
01010	Summary Of Work
01027	Applications for Payments
01035	Modification Procedures
01102	Alteration Procedures
01230	Alternates
01300	Submittals
01300A	Standard Submittal Form
01352	LEED Requirements
01500	Temporary Facilities
01575	Temporary Erosion and Sedimentation Control
01600	Materials and Equipment
01630	Product Substitutions
01700	Project Closeout
01732	Waste Management
01734	Indoor Air Quality
01800	Cleaning and Disposal of Debris
Site Construction	
02057	Soils and Aggregates
02300	Earthwork
02510	Cooling Water and Fire Protection
02530	Sanitary Sewerage
02630	Storm Drainage
02740	Flexible Pavement

Brookhaven National Lab
Central Chilled Water Fac Ph II Exp

Project Manager: Kaplan, G

Specification Section Number	Title
Site Construction	
02820	Fence and Gates
Concrete	
03300	Cast-In-Place Concrete
03315	Slabs-On-Grade
03600	Grout
Masonry	
04810	Masonry Assemblies
Metals	
05120	Structural Steel
05120A	Appendix A-Shop Drawing Submittal Form
05310	Metal Roof Deck
05315	Metal Floor Deck
05500	Metal Fabrications
Wood and Plastics	
06100	Rough Carpentry
06200	Finish Carpentry
Thermal and Moisture Protection	
07110	Dampproofing
07533	PVC Single-Ply Roofing
07600	Roof Sheet Metal and Flashing
07720	Roof Accessories
07840	Firestopping
07900	Joint Sealants
Doors and Windows	
08110	Steel Doors and Frames
08310	Access Doors
08331	Overhead Coiling Doors
08341	Sound Control Doors and Frames
08710	Door Hardware
Finishes	
09250	Gypsum Board
09300	Tile
09651	Resilient Tile Flooring

Brookhaven National Lab
Central Chilled Water Fac Ph II Exp

Project Manager: Kaplan, G

Specification Section Number	Title
Finishes	
09900	Painting
09960	High Performance Coatings
Specialties	
10210	Metal Louvers
10440	Building Signage
10500	Metal Lockers
10810	Toilet Specialties
Special Construction	
13125	Pre-Engineered Building
13855	Instrumentation and Control Systems - General
13856	Instrumentation and Control Systems - Electrical Work
13865	Control Systems Equipment
13865A	Automatic Control Valves-Appendix A
13865A2	Automatic Control Valve Schedule
13865B	Flow Meters-Appendix B
13865B2	Flow Meter Schedule
13865C	Instrument List - Appendix C
13870	Refrigerant Gas Detection System
13875	I&C Systems Start-Up and Final Acceptance Testing
Mechanical	
15050	General Mechanical Requirements
15080	Thermal Insulation
15100	Underground Piping Systems
15105	Aboveground Piping Systems
15110	Valves
15120	Piping Specialties
15130	Pumping Equipment
15212	Compressed Air Dryer and Afterfilter
15215	Screw Type Air Compressor
15218	Compressed Air Receiver
15300	Fire Protection System
15400	Plumbing
15652	Refrigeration-Hermetic Centrifugal Chiller

Brookhaven National Lab
Central Chilled Water Fac Ph II Exp

Project Manager: Kaplan, G

Specification Section Number	Title
Mechanical	
15700	Environmental Equipment
15710	Steam and Condensate Specialties and Equipment
15770	Atmospheric Cooling Equipment
15800	Air Distribution and Exhaust
15950	Testing And Balancing
Electrical	
16010	Electrical General Requirements
16025	Electrical Systems
16050	Basic Materials and Methods
16050A	Appendix A - Nameplates and Labels
16100	Motor Control
16112	Busways
16115	Medium Voltage Cable
16120	Wire and Cable (600 Volts and Less)
16121	Wiring and Control Devices
16312	Load Center Unit Substation-Double Ended
16316	Medium Voltage Metal Clad Switchgear
16318	Medium Voltage Metal Enclosed Switchgear
16320	Power Transformer
16350	Arc Flash Mitigation System
16400	Distribution Equipment
16402	Underground Electric Service
16450	Grounding
16500	Lighting Systems
16611	Uninterruptible Power Supply Battery-Inverter, Auto-Bypass
16721	Fire Alarm System
16741	Paging System
16999	Electrical Acceptance Tests

SECTION 00220

SOIL EXPLORATION DATA

1.1 SUMMARY

A. A copy of the soil consultant's report on the exploration of the soil conditions is on file at MPO office and is available for review.

B. For the CONTRACTOR'S convenience, parts of the soil consultant's report are included in the CONTRACT DOCUMENTS. All such information represents only the conditions found during the exploration and does not constitute a representation, either expressed or implied, that the conditions indicated are typical of those throughout the Site or any part of the Site. The information is offered to assist the CONTRACTOR in evaluating the extent and complexity of the WORK. Design recommendations which may appear in the soil consultant's report are made only to the ARCHITECT-ENGINEER for evaluation purposes and are not in any manner a part of the CONTRACT DOCUMENTS nor of the CONTRACT between the CONTRACTOR and the OWNER.

C. Representative soil samples may be on file at the consultant's laboratory for examination.

D. Without cost to the OWNER, additional soil borings or other explorations may be made to further determine the Site conditions. Coordinate additional exploratory work with OWNER'S operations so as not to interfere with OWNER'S use of the site.

E. Upon completion of additional exploratory work, backfill the test holes and pits using removed material. If removed material is not sufficient, provide additional compactible material of similar character to the native soil. Compact the backfill to same density as adjacent soil.

F. The CONTRACTOR shall be fully responsible for any deductions or conclusions made on the basis of this information.

1.2 SOIL REPORT

A. Soil consultant's report, "Geotechnical Study – Utility Plant Expansion" by NTH Consultants, dated October 17, 2007, is available from OWNER upon request.

B. Soil Boring Log from the Soil Consultant's report is appended to this Section.

END OF SECTION

Revision History	
Date	**Rev. No.**
A	0
B	0
C	0
D	0
E	0
F	0
02-19-09	0

00220A

APPENDIX

SOIL BORING LOGS

THIS PAGE INTENTIONALLY LEFT BLANK

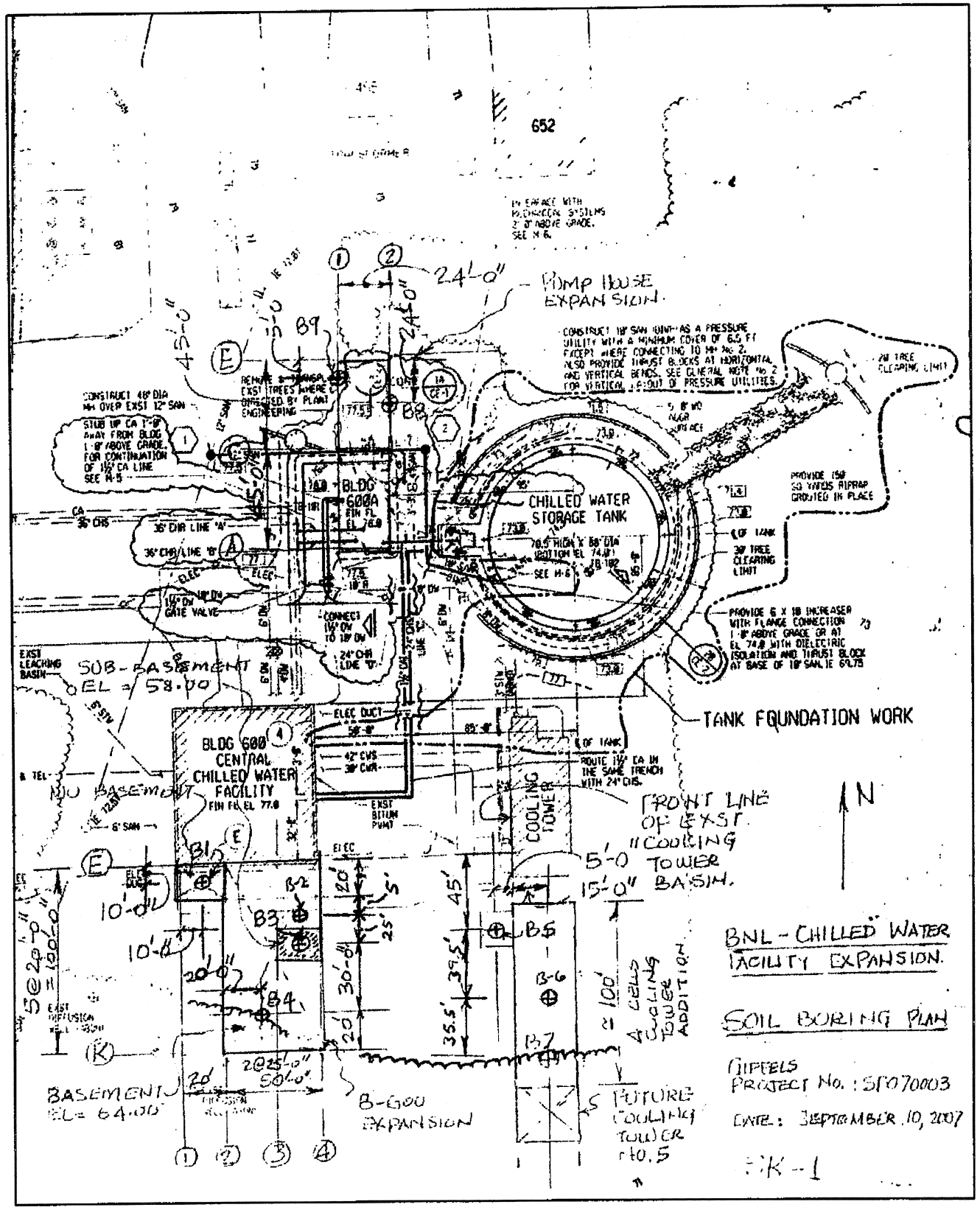

NTH PROJECT No.: 15-070842	CAD FILE NAME: 070842002	NTH Consultants, Ltd. Infrastructure Engineering and Environmental Services	SOIL BORING PLAN BROOKHAVEN NATIONAL LABS EXPANSION	FIGURE
DESIGNED BY: R.W.	PLOT DATE: 10-4-07		BROOKHAVEN SUFFOLK COUNTY, NEW YORK	2
DRAWN BY: J.M.R.	DRAWING SCALE: N.T.S.			
CHECKED BY: AML	INCEPTION DATE: 10-4-07			

LOG OF TEST BORING NO: B-1

Project Name: *Brookhaven National Labs Expansion*

Project Location: *Brookhaven, New York*

NTH Consultants, Ltd.

NTH Proj. No: *15-070842-20*

SUBSURFACE PROFILE				SOIL SAMPLE DATA				
ELEV. (FT)	PRO-FILE	GROUND SURFACE ELEVATION: 76.5+/-	DEPTH (FT.)	SAMPLE TYPE/NO.	BLOWS/ 6-INCHES	STD. PEN RESISTANCE (N)	MOISTURE CONTENT (PERCENT)	OTHER TESTS
		Asphalt pavement 0.35						
75		Medium compact brown silty fine to medium SAND, trace gravel, trace coarse sand (Alluvial Soil) (SM) 4.5		S-1	10 10 14 16	24	11.4	GS
				S-2	7 7 5 6	12		
		Loose light brown fine to medium SAND, trace silt, trace coarse sand, trace gravel (Alluvial Soil) (SW-SM) 8.0	5	S-3	3 4 4 4	8		
70				S-4	4 5 4 5	9		
		Medium compact light brown-white fine to medium SAND, trace silt, trace coarse sand, trace gravel (Alluvial Soil) (SW-SM) 15.0	10	S-5	4 6 6 7	12		
65			15	S-6	4 7 9 12	16		
		End of Boring						
60			20					
55			25					
50			30					
45			35					
40								

Total Depth: *15 FT*
Drilling Date: *9/26/07*
Inspector: *R. Walters*
Contractor: *Delta Well and Pump Company, Inc.*
Driller: *R. Devine II*
Drilling Method:
Hollow stem auger, Model F-10 top drive rig
Plugging Procedure:
Backfilled with soil cuttings

Water Level Observation (Depth):
Dry at completion

NOTES
Caved dry at 7.1 feet

LOG OF TEST BORING NO: B-2

Project Name: *Brookhaven National Labs Expansion*

Project Location: *Brookhaven, New York*

NTH Consultants, Ltd.

NTH Proj. No: *15-070842-20*

SUBSURFACE PROFILE				SOIL SAMPLE DATA				
ELEV. (FT)	PRO-FILE	GROUND SURFACE ELEVATION: 76.5+/-	DEPTH (FT.)	SAMPLE TYPE/NO.	BLOWS/ 6-INCHES	STD. PEN RESISTANCE (N)	MOISTURE CONTENT (PERCENT)	OTHER TESTS
		Topsoil 0.2						
75		Medium compact brown silty fine to medium SAND, trace coarse sand, trace gravel (Alluvial Soil) (SM) 1.5		S-1	5 9 10 14	19		
				S-2	5 7 8 8	15		
			5	S-3	5 8 10 19	18		
70		Loose to medium compact light brown fine to medium SAND, trace gravel, trace coarse sand, trace silt (Alluvial Soil) (SW-SM)		S-4	11 2 9 9	11		
			10	S-5	4 4 4 7	8		
65		11.5						
		Loose to medium compact light brown-white fine to medium SAND, trace silt, trace coarse sand (Alluvial Soil) (SW-SM)	15	S-6	5 12 12 10	24		
60		* Trace gravel with depth	20	S-7	3 5 4 5	9		
55		21.5						
			25	S-8	8 10 14 19	24		
50		Medium compact light brown-white fine to medium SAND, trace gravel, trace silt, trace coarse sand (Alluvial Soil) (SW-SM)	30	S-9	5 10 14 11	24		
45		35.0	35	S-10	3 6 7 6	13		
		End of Boring						
40								

Total Depth: *35 FT*
Drilling Date: *9/26/07*
Inspector: *R. Walters*
Contractor: *Delta Well and Pump Company, Inc.*
Driller: *R. Devine II*
Drilling Method:
Hollow stem auger, Model F-10 top drive rig
Plugging Procedure:
Backfilled with soil cuttings

Water Level Observation (Depth):
34.0 feet encountered
32.15 feet at completion

NOTES
Caved dry at 18.5 feet

LOG OF TEST BORING NO: B-3

Project Name: *Brookhaven National Labs Expansion*

Project Location: *Brookhaven, New York*

NTH Consultants, Ltd.

NTH Proj. No: *15-070842-20*

SUBSURFACE PROFILE				SOIL SAMPLE DATA				
ELEV. (FT)	PRO-FILE	GROUND SURFACE ELEVATION: 77+/-	DEPTH (FT.)	SAMPLE TYPE/NO.	BLOWS/ 6-INCHES	STD. PEN RESISTANCE (N)	MOISTURE CONTENT (PERCENT)	OTHER TESTS
		Topsoil 0.1						
75		Medium compact to compact brown fine to coarse SAND, trace silt, trace gravel (Alluvial Soil) (SW-SM) 4.0		S-1	11 11 23 16	34		
				S-2	7 7 8 6	15		
		Medium compact brown-light brown fine to coarse SAND, trace silt, trace gravel (Alluvial Soil) (SW-SM) 8.5	5	S-3	4 5 7 8	12		
70				S-4	14 11 10 12	21		
		Very loose to loose light brown fine to coarse SAND, trace gravel, trace silt (Alluvial Soil) (SW-SM) 14.5	10	S-5	5 4 4 5	8		
65			15	S-6	2 1 3 3	4		
60		Loose to medium compact light brown-white fine to coarse SAND, trace gravel, trace silt (Alluvial Soil) (SW-SM)	20	S-7	3 5 4 4	9		
55		* Encountered micaeous brown silty fine to medium SAND from 19.8 to 20.0 feet	25	S-8	9 11 14 14	25		
50			30	S-9	3 4 9 14	13	2.4	GS
45		* Trace fine sand with depth	35	S-10	6 6 7 9	13		
40								

Total Depth: *50 FT*
Drilling Date: *9/25/07*
Inspector: *R. Walters*
Contractor: *Delta Well and Pump Company, Inc.*
Driller: *R. Devine II*
Drilling Method:
Hollow stem auger, Model F-10 top drive rig
Plugging Procedure:
Backfilled with soil cuttings

Water Level Observation (Depth):
34.0 feet encountered
32.19 feet at completion

NOTES

LOG OF TEST BORING NO: B-3

Project Name: *Brookhaven National Labs Expansion*

Project Location: *Brookhaven, New York*

NTH Consultants, Ltd.

NTH Proj. No: *15-070842-20*

SUBSURFACE PROFILE				SOIL SAMPLE DATA				
ELEV. (FT)	PRO-FILE	GROUND SURFACE ELEVATION: 77+/-	DEPTH (FT.)	SAMPLE TYPE/NO.	BLOWS/ 6-INCHES	STD. PEN RESISTANCE (N)	MOISTURE CONTENT (PERCENT)	OTHER TESTS
		41.5		S-11	4 6 6 8	12		
35								
		Loose to medium compact light brown fine to coarse SAND, trace gravel, trace silt (Alluvial Soil) (SW-SM)	45	S-12	3 5 3 3	8		
30								
		50.0	50	S-13	5 5 7 6	12		
		End of Boring						
25								
			55					
20								
			60					
15								
			65					
10								
			70					
5								
			75					
0								

Total Depth: *50 FT*
Drilling Date: *9/25/07*
Inspector: *R. Walters*
Contractor: *Delta Well and Pump Company, Inc.*
Driller: *R. Devine II*
Drilling Method:
Hollow stem auger, Model F-10 top drive rig
Plugging Procedure:
Backfilled with soil cuttings

Water Level Observation (Depth):
34.0 feet encountered
32.19 feet at completion

NOTES

LOG OF TEST BORING NO: B-4

NTH Consultants, Ltd.

NTH Proj. No: *15-070842-20*

6 of 12

Project Name: *Brookhaven National Labs Expansion*

Project Location: *Brookhaven, New York*

SUBSURFACE PROFILE				SOIL SAMPLE DATA				
ELEV. (FT)	PRO-FILE	GROUND SURFACE ELEVATION: 77+/-	DEPTH (FT.)	SAMPLE TYPE/NO.	BLOWS/ 6-INCHES	STD. PEN RESISTANCE (N)	MOISTURE CONTENT (PERCENT)	OTHER TESTS
		Topsoil 0.25						
75		Loose light brown silty fine to coarse SAND, trace gravel (Alluvial Soil) (SM) 2.0		S-1	4 4 5 4	9		
		Loose to medium compact light brown fine to medium SAND, trace gravel, trace coarse sand, trace silt (Alluvial Soil) (SW-SM)		S-2	5 4 4 3	8		
			5	S-3	4 6 6 7	12		
70		* Encountered trace to little gravel with depth		S-4	6 5 4 6	9		
			10	S-5	10 8 11 12	19		
		11.5						
65		Medium compact light brown and white medium to coarse SAND, trace gravel, trace fine sand, trace silt (Alluvial Soil) (SW-SM)	15	S-6	6 7 9 9	16		
60			20	S-7	5 9 10 9	19		
		* Encountered little to some gravel from 19 to 19.5 feet 21.5						
55		Loose to medium compact light brown-white fine to coarse SAND, trace to little gravel, trace silt (Alluvial Soil) (SW-SM)	25	S-8	4 8 8 9	16		
50			30	S-9	6 8 10 14	18		
45		* Trace gravel with depth	35	S-10	4 4 6 8	10		
40								

Total Depth: *40 FT*
Drilling Date: *9/25/07*
Inspector: *R. Walters*
Contractor: *Delta Well and Pump Company, Inc.*
Driller: *R. Devine II*
Drilling Method:
Hollow stem auger, Model F-10 top drive rig
Plugging Procedure:
Backfilled with soil cuttings

Water Level Observation (Depth):
34.0 feet encountered
32.25 feet at completion

NOTES
Caved dry at 14.05 feet

LOG OF TEST BORING NO: B-4

NTH Consultants, Ltd.

Project Name: *Brookhaven National Labs Expansion*

Project Location: *Brookhaven, New York*

NTH Proj. No: *15-070842-20*

SUBSURFACE PROFILE				SOIL SAMPLE DATA				
ELEV. (FT)	PRO-FILE	GROUND SURFACE ELEVATION: 77+/-	DEPTH (FT.)	SAMPLE TYPE/NO.	BLOWS/ 6-INCHES	STD. PEN RESISTANCE (N)	MOISTURE CONTENT (PERCENT)	OTHER TESTS
		End of Boring 40.0		S-11	2 3 4 4	7		
35								
			45					
30								
			50					
25								
			55					
20								
			60					
15								
			65					
10								
			70					
5								
			75					
0								

Total Depth: *40 FT*
Drilling Date: *9/25/07*
Inspector: *R. Walters*
Contractor: *Delta Well and Pump Company, Inc.*
Driller: *R. Devine II*
Drilling Method:
Hollow stem auger, Model F-10 top drive rig
Plugging Procedure:
Backfilled with soil cuttings

Water Level Observation (Depth):
34.0 feet encountered
32.25 feet at completion

NOTES
Caved dry at 14.05 feet

LOG OF TEST BORING NO: B-5

Project Name: *Brookhaven National Labs Expansion*

Project Location: *Brookhaven, New York*

NTH Consultants, Ltd.

NTH Proj. No: *15-070842-20*

SUBSURFACE PROFILE				SOIL SAMPLE DATA				
ELEV. (FT)	PRO-FILE	GROUND SURFACE ELEVATION: 76.5+/-	DEPTH (FT.)	SAMPLE TYPE/NO.	BLOWS/ 6-INCHES	STD. PEN RESISTANCE (N)	MOISTURE CONTENT (PERCENT)	OTHER TESTS
		Topsoil 0.3						
75		Compact to very compact silty fine to medium SAND, trace gravel (Fill) (SM) 5.0		S-1	20 16 18 23	34		
				S-2	24 31 20 19	51		
			5	S-3	10 14 25 27	39		
70		Medium compact light brown fine to medium SAND, trace gravel, trace silt, trace coarse sand (Alluvial Soil) (SW-SM)		S-4	6 7 7 8	14		
			10	S-5	5 7 6 9	13		
65			15	S-6	4 7 8 7	15	3.1	GS
60		16.5 Loose to medium compact light brown-white fine to medium SAND, trace silt, trace coarse sand (Alluvial Soil) (SW-SM)	20	S-7	5 5 5 7	10		
55		25.0	25	S-8	4 5 9 9	14		
		End of Boring						
50			30					
45			35					
40								

Total Depth: *25 FT*
Drilling Date: *9/26/07*
Inspector: *R. Walters*
Contractor: *Delta Well and Pump Company, Inc.*
Driller: *R. Devine II*
Drilling Method:
Hollow stem auger, Model F-10 top drive rig
Plugging Procedure:
Backfilled with soil cuttings

Water Level Observation (Depth):
Dry at completion

NOTES
Caved dry at 13.25 feet

LOG OF TEST BORING NO: B-6

Project Name: *Brookhaven National Labs Expansion*

Project Location: *Brookhaven, New York*

NTH Consultants, Ltd.

NTH Proj. No: *15-070842-20*

SUBSURFACE PROFILE				SOIL SAMPLE DATA				
ELEV. (FT)	PRO-FILE	GROUND SURFACE ELEVATION: 72.5+/-	DEPTH (FT.)	SAMPLE TYPE/NO.	BLOWS/ 6-INCHES	STD. PEN RESISTANCE (N)	MOISTURE CONTENT (PERCENT)	OTHER TESTS
		Topsoil 0.4						
		Loose brown silty fine to medium SAND, trace coarse sand (Alluvial Soil) (SM) 2.5		S-1	4 5 4 4	9		
70		Loose brown fine to medium SAND, trace to little silt, trace gravel, trace coarse sand (Alluvial Soil) (SM) 6.0	5	S-2	5 5 5 5	10		
				S-3	3 5 4 4	9		
65		Medium compact light brown fine to medium SAND, trace gravel, trace silt (Alluvial Soil) (SW-SM)		S-4	5 10 13	23		
		* Encountered trace to little silt from 7.5 to 7.7 feet 11.5	10	S-5	6 8 21 18	29		
60		Loose to medium compact light brown-white fine to medium SAND, trace gravel, trace silt, trace coarse sand (Alluvial Soil) (SW-SM)	15	S-6	2 3 5 5	8		
55		20.0	20	S-7	7 8 8 9	16		
		End of Boring						
50			25					
45			30					
40			35					
35								

Total Depth: *20 FT*
Drilling Date: *9/26/07*
Inspector: *R. Walters*
Contractor: *Delta Well and Pump Company, Inc.*
Driller: *R. Devine II*
Drilling Method:
Hollow stem auger, Model F-10 top drive rig
Plugging Procedure:
Backfilled with soil cuttings

Water Level Observation (Depth):
Dry at completion

NOTES
Caved dry at 10.5 feet

LOG OF TEST BORING NO: B-7

Project Name: *Brookhaven National Labs Expansion*

Project Location: *Brookhaven, New York*

NTH Consultants, Ltd.

NTH Proj. No: *15-070842-20*

10 of 12

SUBSURFACE PROFILE				SOIL SAMPLE DATA				
PRO-FILE	GROUND SURFACE ELEVATION: 71+/-		DEPTH (FT.)	SAMPLE TYPE/NO.	BLOWS/ 6-INCHES	STD. PEN RESISTANCE (N)	MOISTURE CONTENT (PERCENT)	OTHER TESTS
	Topsoil	0.35						
	Very loose brown silty fine to medium SAND, trace coarse sand, trace gravel (Alluvial Soil) (SM)	2.0		S-1	1 2 2 2	4	12.6	GS
				S-2	2 3 4 5	7		
	Loose to medium compact light brown fine to medium SAND, trace silt, trace coarse sand, trace gravel (Alluvial Soil) (SW-SM)		5	S-3	5 10 14 20	24		
	* Encountered silty fine SAND, trace medium sand from 7.7 to 7.9 feet			S-4	6 8 8 10	16		
			10	S-5	4 5 5 9	10		
	* Grinding from 8.5 to 9.5 feet							
			15	S-6	2 3 3 4	6		
	* Grinding from 15 to 16.0 feet							
		20.0	20	S-7	4 6 7 8	13		
	End of Boring							
			25					
			30					
			35					

Total Depth: *20 FT*

Drilling Date: *9/27/07*

Inspector: *R. Walters*

Contractor: *Delta Well and Pump Company, Inc.*

Driller: *R. Devine II*

Drilling Method:
Hollow stem auger, Model F-10 top drive rig

Plugging Procedure:
Backfilled with soil cuttings

Water Level Observation (Depth):
Dry at completion

NOTES
Caved dry at 9 feet

LOG OF TEST BORING NO: B-8

Project Name: *Brookhaven National Labs Expansion*

Project Location: *Brookhaven, New York*

NTH Consultants, Ltd.

NTH Proj. No: *15-070842-20*

SUBSURFACE PROFILE				SOIL SAMPLE DATA				
ELEV. (FT)	PRO-FILE	GROUND SURFACE ELEVATION: 75+/-	DEPTH (FT.)	SAMPLE TYPE/NO.	BLOWS/ 6-INCHES	STD. PEN RESISTANCE (N)	MOISTURE CONTENT (PERCENT)	OTHER TESTS
		Topsoil 0.5						
		Concrete slab 0.9						
		Loose brown silty fine to medium SAND (Alluvial Soil) (SM) 3.0		S-1	0 2 2	4		
		Loose to medium compact light brown-white fine to medium SAND, trace silt, trace coarse sand (Alluvial Soil) (SW-SM) 6.0		S-2	4 3 3 4	6		
70			5	S-3	5 8 9 12	17		
		Loose to medium compact light brown fine to medium SAND, trace gravel, trace silt, trace coarse sand (Alluvial Soil) (SW-SM)		S-4	5 6 8 11	14	2.7	GS
65			10	S-5	4 2 9 8	11		
60		15.0	15	S-6	2 3 4 4	7		
		End of Boring						
55			20					
50			25					
45			30					
40			35					

Total Depth: *15 FT*
Drilling Date: *9/27/07*
Inspector: *R. Walters*
Contractor: *Delta Well and Pump Company, Inc.*
Driller: *R. Devine II*
Drilling Method:
Hollow stem auger, Model F-10 top drive rig
Plugging Procedure:
Backfilled with soil cuttings

Water Level Observation (Depth):
Dry at completion

NOTES
Caved dry at 6.5 feet

LOG OF TEST BORING NO: B-9

NTH Consultants, Ltd.

Project Name: *Brookhaven National Labs Expansion*

Project Location: *Brookhaven, New York*

NTH Proj. No: *15-070842-20*

SUBSURFACE PROFILE				SOIL SAMPLE DATA				
ELEV. (FT)	PRO-FILE	GROUND SURFACE ELEVATION: 75+/-	DEPTH (FT.)	SAMPLE TYPE/NO.	BLOWS/ 6-INCHES	STD. PEN RESISTANCE (N)	MOISTURE CONTENT (PERCENT)	OTHER TESTS
		Topsoil 0.4						
		Medium compact brown silty fine to medium SAND (Alluvial Soil) (SM) 2.5		S-1		7		
		* Encountered concrete slab from 1 to 1.4 feet		S-2	5 4 2 2	6		
70		Loose to medium compact light brown fine to medium SAND, trace silt, trace gravel, trace coarse sand (Alluvial Soil) (SW-SM)	5	S-3	7 5 4 3	9		
				S-4	3 3 6 13	9		
65			10	S-5	5 12 14 16	26		
		* Encountered trace to little gravel from 8 to 15.0 feet						
60		15.0	15	S-6	6 5 6 7	11		
		End of Boring						
55			20					
50			25					
45			30					
40			35					

Total Depth: *15 FT*
Drilling Date: *9/27/07*
Inspector: *R. Walters*
Contractor: *Delta Well and Pump Company, Inc.*
Driller: *R. Devine II*
Drilling Method:
Hollow stem auger, Model F-10 top drive rig
Plugging Procedure:
Backfilled with soil cuttings

Water Level Observation (Depth):
Dry at completion

NOTES
Caved dry at 6.3 feet

SECTION 00700

GENERAL CONDITIONS

A. The General Conditions:

1. The following supplements modify, and/or add to the General Documents and the Acceptance and Award Form.

2. Where any article, paragraph or subparagraph in said documents is supplemented by one of the following paragraphs, the provisions of such article, paragraph or subparagraph shall remain in effect and the supplemental provisions shall be considered as added thereto.

3. Where any article, paragraph, or subparagraph in said documents is amended, voided or superseded by any of the following paragraphs, the provisions of such article, paragraph or subparagraph not so amended, voided, or superseded shall remain in effect.

B. Execution and Correlation:

1. All work mentioned or indicated in the Contract Documents shall be performed by the Contractor as part of this Contract unless it is specifically indicated in the Contract Documents that such work is to be done by others.

2. Should the Drawings or the Specifications disagree in themselves, with regard to quality or quantity, the Contractor shall provide the better quality or greater quantity of work and/or materials unless otherwise directed by written modifications to the Contract in accordance with applicable provisions of these Conditions.

3. The Contractor, and all Subcontractors, shall refer to all of the Drawings, including those showing primarily the work of the mechanical, electrical and other specialized trades, and to all of the Sections of the Specifications, and shall perform all work reasonably inferrable therefrom as being necessary to produce the indicated results.

4. All indications or notations which apply to one of a number of similar situations, materials or processes shall be deemed to apply to all such situations, materials, or processes wherever they appear in the Work, except where a contrary result is clearly indicated by the Contract Documents.

C. Definitions:

1. As used in these Specifications, the following have the meaning shown opposite each:

a. BNL – Brookhaven Science Associates, operator of Brookhaven National Laboratory, and its authorized representatives of various Divisions and Departments.

b. FOD – BNL's Facilities & Operations Directorate.

c. MPO – BNL's Modernization Project Office and its authorized representative.

d. BNL Site – Land occupied by Brookhaven National Laboratory, in Brookhaven Township, Suffolk County, New York.

e. Site – Immediate area of BNL Site assigned to Contractor for performance of work.

f. Work or Project – Includes but is not limited to all labor, materials, tools, and equipment required and reasonably inferred by Contract to complete all construction.

g. Contractor – Person or entity identified in Lump Sum Contract and responsible for completion of all work.

h. Subcontractor – Person or entity directly contracting with Contractor including one who furnishes material worked to a special design according to Drawings and Specifications, but not including one who merely furnishes materials not so worked.

2. Wherever the terms "shown on drawings" are used in the Specifications, they shall mean "noted", "indicated", "scheduled", "detailed", or any other diagrammatic or written reference made on the drawings.

3. Wherever the terms "Provide" or "Provided" are used in these Specifications, they shall mean "FURNISH AND INSTALL". The term "Furnish" shall mean "to fit out and/or supply" material required for project use. The term "INSTALL" shall mean "set", "connect", "erect", "apply" or to "otherwise fix into position for use".

4. Wherever the terms "material" or "materials" are used in the Specifications, they shall mean any "product", "equipment", "device", "assembly" or "item" required under the contract, as indicated by trade or brand name, manufacturers' name, standard specification reference or other description.

5. The terms "approved" or "approval" shall mean the written approval of MPO.

6. The terms "directed", "required", "permitted", "ordered", "designated", "prescribed" and similar words shall mean the direction, requirement, permission, order, designation or prescription of MPO; the terms "approved", "acceptable", "satisfactory" and similar words shall mean approved by, acceptable or satisfactory to MPO; and the terms "necessary", "reasonable", "proper", "correct" and similar words shall mean necessary, reasonable, proper, or correct, in the judgement of MPO and/or BNL.

7. "Piping" includes in addition to pipe or tubing, all fittings, flanges, unions, valves, strainers, drains, hangers and other accessories relative to such piping.

8. "Concealed" means hidden from sight in chases, furred spaces, shafts, hung ceiling, embedded in construction or in crawl spaces.

9. "Exposed" means not installed underground or "concealed" as defined above.

10. "Invert Elevations" means the inside bottom of pipe.

11. "New" shall mean manufactured within the past twenty-four (24) months and never before used.

D. Review and Intent of Contract Documents:

1. The Contractor shall, prior to starting the work on any single portion and at frequent intervals during the progress of the work, carefully study and compare the General Documents, General Conditions, Drawings, Specifications, Addenda and other Contract Documents and shall at once report to MPO any error, inconsistency or omission he may discover.

2. Any necessary change shall be ordered as provided in Section 01035, and other provisions of the Contract Documents. Should Contractor proceed with the work, without such notice to MPO, having discovered such errors, inconsistencies or omissions, all costs arising therefrom shall be borne by the Contractor.

E. Specifications and Standards:

1. Applicable codes and standards for material furnished and work installed shall include all state laws, local ordinances, requirements of governmental agencies having jurisdiction, and applicable requirements of the latest editions of the following codes and standards including but not limited to:

ADA	Americans with Disabilities Act
BNL ES&H	BNL Environmental Safety and Health
BNL RCM	BNL Radiation Control Manual
NYSDOT	New York State Department of Transportation, Office of Engineering, Standard Specification, Construction and Materials.
NEC	National Electrical Code
OSHA	Occupational Safety & Health Administration
EPA	Environmental Protection Agency
CFR	Code of Federal Regulations
FED-STD	Federal Standard
FS	Federal Specification
ASSE	American Society of Sanitary Engineers
NFPA	National Fire Protection Association NFPA-101.

NYSBC	Building Code of New York State
NYCRR	New York State Codes, Rules and Regulations
UL	Underwriter's Laboratories
NEMA	National Electric Manufacturers Association
ASHRAE	American Society of Heating, Refrigeration and Air Conditioning
ASME	American Society of Mechanical Engineers
ANSI	American National Standards Institute
ASA	American Standards Association
AWWA	American Water Works Association
NBS	National Bureau of Standards
FM	Factory Mutual
SCDH	Suffolk County Department of Health
ASTM	American Society for Testing and Materials

In case of conflict, MOST STRINGENT codes will govern.

2. Where specific performance requirements are listed herein, it is the intent of this Specification that all manufacturers, fabricators, suppliers, installers, contractors, subcontractors, specialty and sub-subcontractors will provide services satisfying these requirements whether mentioned by trade or manufacturer's name or submitted for approval as a substitute.

3. Where no explicit quality or standards for materials or workmanship are established for work, such work shall be of such quality consistent with industry standards and of the construction quality established for the Project generally. Conform to specified manufacturer's published specifications and installation instructions unless otherwise specified or indicated.

4. Meet requirements of BNL Standards-Based Management System; ES&H Standards and other applicable SBMS standards, and all other codes and standards specified. In cases of conflict, the standard providing the greater protection shall govern.

5. BNL is an ISO 14001 certified laboratory. It shall be the duty and the responsibility of the Contractor and his subs to comply with the BNL standards and procedures in the area of environmental control, hazardous waste generation, spill prevention, and all other standards specified herein.

6. Copies are available for reference at MPO.

7. Volatile Organic Compounds (VOC's) and their emissions are controlled under the New York Codes, Rules and Regulations of the State of New York. Architectural surface coatings must comply with 6NYCRR Part 205.

    a. For the purpose of the BNL location, Nassau, Suffolk, Westchester and Rockland Counties fall under the compliance rules of the New York City metropolitan area.

b. All coatings and coated products to be used in the work, shall comply with the appropriate rules and regulations.

8. Federal agencies, to the extent practicable, are required to amend procurement practices so as to minimize the purchase of products manufactured with ozone depleting substances. The Contractor shall, therefore, provide materials that use low or non-ozone depleting substances during their manufacture and/or installation. Materials that do not comply shall be identified in the contractor's submittal for approval.

9. Federal agencies, to the maximum extent possible, are required to use recovered materials in construction products and manufactured materials. Specific products using recovered materials are covered within the applicable Specification sections.

F. Drawings:

1. Drawings are generally done to scale as noted. Contractor shall not, however, scale the drawings for establishing dimensions and/or layout. Scaling of drawings by Contractor shall be at Contractor’s own risk. Dimensions indicated on the documents shall be used. Request clarification if discrepancies noted.

2. Drawings of existing buildings and building site are available for reference at MPO office.

3. The Contractor shall not perform any portion of the Work at any time without Contract Documents or, where required, approved Shop Drawings, Product Data or Samples for such portion of the Work as stipulated in Article 42.16 of the Attachment A.

4. Should the Contractor elect to release work for purchase, fabrication or installation without these submittal approvals, it shall be at his own risk and expense should the work be subsequently disapproved.

5. The Contractor shall give MPO timely notice of any additional design drawings, specifications, or instructions required to define the Work in greater detail, or to permit the proper progress of the Work and MPO will provide such information with reasonable promptness so as to cause no delay in the Work.

6. Whenever the Contractor proposes a substitution for a specified item of the work, MPO may require said Contractor to produce reasonable evidence that a material meets such requirements, such as certified reports of past tests by qualified testing laboratories, reports of studies by qualified experts, or other evidence which, in the opinion of MPO, would lead to a reasonable certainty that any material used, or proposed to be used, in the Work meets the requirements of the Contract Documents. All such data shall be furnished at said Contractor's expense. Coordinate with Section 01600 "Materials and Equipment".

7. The Contract Documents are intended to produce a facility of consistent character and quality of design. All components of the project including visible items of mechanical and electrical equipment have been selected to have a coordinated design in relation to the overall appearance of the project. MPO shall judge the design and appearance of proposed substitutes on the basis of their suitability in relation to the overall design of the project.

G. Work Permits:

1. The work of this Contract is controlled by the requirements of BNL Standards-Based Management System; "Work Planning and Control for Experiments and Operations," latest edition.

2. A Work Permit, prepared by BNL and signed by the Contractor, shall be posted or on hand at the project site. By signing the Work Permit, the Contractor indicates that they understand the hazards of the job and the permits required.

3. A Tool Box Meeting shall be held by the Contractor to discuss any requirements noted on the Work Permit with all Contractor and Subcontractor personnel assigned to the Work. A Tool Box Meeting Log shall be kept on the Job Site and be available for auditing by BNL.

H. Notice to Proceed:

1. The Contractor shall not knowingly, without formal notice from MPO, prematurely commence operations on the BNL Site. The Notice to Proceed will not be issued by MPO prior to receipt, by Contracts and Procurement, of all required bonds and insurance documents, and prior to receipt, and approval by Modernization Project Office, of the required Safety Plan.

2. The Notice to Proceed will be issued, in accordance with Clause 1 above, along with a BNL Integrated Safety Management (ISM) Flowdown Form. This form shall be completed by every Subcontractor to be used on this Project and returned to MPO, by the Contractor, as part of the requirements of Section 01300, "Submittals," Clause A.2, "Administrative Submittals."

3. Work may proceed, however, in the preparation and submittal of required submissions and the ordering of materials and equipment that do not require prior approval by MPO.

I. Use of Site:

1. The right of possession of the premises and the improvements made thereon by the Contractor shall remain at all times in BNL. The Contractor's right to entry and use thereof arises solely from the permission granted by BNL under the Contract Documents.

2. The Contractor shall confine the use of the premises for all purposes, to the areas occupied by the construction and related storage areas as and if shown.

3. The Contractor shall repair or replace any existing trees, shrubbery or other planting damaged by operations and/or workmen employed in performance of the contract.

4. It shall be the responsibility of the Contractor to provide necessary and required security measures to safeguard the construction site and materials, both stored and installed, from theft, vandalism and intrusion of unauthorized persons during all working hours, non-working hours, weekends and holidays.

J. Work Hours:

1. The Contractor shall perform all work on weekdays, excluding BNL holidays, between 8:00 a.m. and 5:00 p.m., unless otherwise specified or approved. The BNL holiday list is available upon request.

2. Notify MPO 24 hours in advance to request approval to work outside of the above working hours. Advise MPO of all planned activities and submit a list of all contractor and subcontractor employees who are expected on-site during the off-hour period. All employees working during off-hours must possess a valid BNL contractor employee photo identification badge.

3. If off-hours work request is approved, MPO will notify BNL Police Headquarters and the Main Gate of the days and hours that work is planned. Failure to notify MPO will be cause for BNL Police to deny access to the job-site.

K. Identification of Employees:

1. All Contractor and Subcontractor employees must attend the Contractor/Vendor Orientation Training Course (Clause N below) and be approved by BNL in order to work on the BNL site. A contractor employee photo identification badge will then be issued in order to have access to the site.

2. U.S. citizens must bring proof of citizenship, photo ID and proof of Social Security number. Acceptable citizenship proof is a passport, birth certificate, naturalization papers, voting eligibility, or similar documentation. Drivers' license, military ID cards, union cards, and Social Security cards are insufficient by themselves as proof of citizenship. Proof of Social Security number includes Social Security card, pay stub, W-2 form or medical insurance card. Handwritten documents are not acceptable. Upon arrival at the BNL Main Gate, they will be sent to the Visitors Trailer to receive a temporary pass, which allows them access to the site to attend CVO training.

3. All Non-U.S. citizen workers, including Permanent Resident Aliens (PRA), requiring access to BNL must complete a BNL Form 473C. The workers shall fully complete the entire form. Blank 473C forms are available from PE and should be reproduced for use by all Contractors' foreign national workers.

   a. The completed Form 473C shall be faxed to BNL at (631) 344-5999 a minimum of thirty (30) working days prior to required access to the BNL site. Workers from countries on DOE's Sensitive Countries Listing (available on request) must allow forty-five (45) days for processing prior to access to the BNL site.

b. PE will notify the worker's employer, as noted on Form 473C, when the worker is eligible to come to BNL and complete the process for a non-U.S. citizen to work at the BNL site. The worker must bring their original passport (with I-94 attached) and applicable visa with any INS documentation supporting the visa status and/or renewals (e.g., Form I-20 for F-1 students or Form IAP-66/DS2019 for J-1 visa holders) to Brookhaven upon their initial check-in and each time their visa status changes thereafter. Individuals with employment authorization cards must bring their card with them upon their initial check-in at BNL.

c. Permanent resident aliens (PRAs) holding green cards must bring their green card with them upon their initial check-in at BNL. Permanent resident aliens without green cards must bring their passport containing a valid I-551 stamp in it when they arrive at Brookhaven. The worker or employer must notify PE 24 hours prior to the worker's initial visit.

d. Upon arrival at the BNL Main Gate, Non-U.S. citizen workers will be sent to the Visitors Trailer to receive a temporary badge, which allows them to attend CVO training. All foreign national contractor employees are responsible to ensure they remain in legal INS status. Their BNL ID badges will expire on the expiration date of their current legal status or one year after issuance, whichever comes first. At that point, they must reapply with updated documentation to continue eligibility to work at BNL.

4. The Contractor shall assure that <u>all</u> Contractor and Subcontractor employees promptly obtain a current BNL contractor employee photo identification badge. Contractor Vendor Orientation (CVO) training must be completed before a badge will be issued. Badges can be obtained in the Badging Office on the Ground Floor of the Research Support Center, Bldg. 400, Monday through Thursday, 8:30 a.m. to 4:00 p.m, and Friday, 8:30 a.m. to 1:00 p.m. In order to keep badging times to a minimum, the Contractor should limit sending all of his employees at the same time.

5. Contractor and Subcontractor employees shall wear the badge so as to be visible at all times while on-site.

6. Contractor employee identification badges are valid for one (1) year after issuance and will require renewal at the Badging Office, Bldg. 400. Badges will be provided at no cost to the Contractor. Immediately upon release of employees or project completion, Contractor's Superintendent shall return badges to the Badging Office. (BNL will retain badges for re-issue for one year.)

7. Contractor employees shall report lost identification badges immediately to the Badging Office, Bldg. 400.

L. Contractor Training Requirements:

1. All Contractor and Subcontractor employees are required to attend BNL's Contractor/Vendor Orientation Training on their first day on-site.

2. Contractor/Vendor Orientation Training is a one and one-half (1-1/2) hour overview of BNL and OSHA safety requirements. The orientation is offered 8:30 a.m. weekdays in Building 938. Upon completion of the orientation, a card will be issued that must be signed by Construction Inspection, Bldg. 650T. The Contractors' employee (U.S. citizens as well as foreign nationals) information must then be entered in the BNL Guest Information System (GIS). To facilitate this process, the following personnel are trained to enter data in GIS: Donna Pfeiffer in Building 185, and Claudia Hatton, Cindy Klemm and Denise Bingham-Miesell in Building 134C. The employee must then return to the Badging Office, Bldg. 400, to obtain the employee identification badge. This safety orientation will be valid for a period of one year. Satisfactory completion will be indicated by issue of employee identification badge.

3. Contractor and Subcontractor employees who have not attended the Safety Orientation will be directed to stop work until they have done so.

4. All Contractor and Subcontractor employees who may be required to "Work On or Near" electrical circuits within the BNL electrical distribution system are required to complete BNL's Electrical Safety I training course. This course is available on the Web at http://training.bnl.gov/elecsaf1 , and is valid training for one (1) year.

5. In addition to completing the course, each organization's electrical work Foreman/Supervisors must discuss NFPA 70E requirements and specific hazard and risk information with their staff. This job briefing should discuss specific electrical work procedures required to accomplish the work of this project. BNL can provide a document that can be used as guidance for this discussion. This job level discussion can be informal but a record of this briefing shall be documented.

6. Contractor shall provide a list of workers that he authorizes to "Work On or Near" and perform LOTO. Contractor and Subcontractor employees who may be required to "Work On or Near" electrical circuits and who have not completed the Web-based BNL Electrical Safety 1 training and NFPA 70E briefing will not be allowed to perform such work until they have done so.

7. All Contractor and Subcontractor employees who may be required to "Work On or Near" electrical circuits must complete an approved NFPA 70E training seminar. Contractor can provide equivalent "in house" NFPA 70E training to his/her employees in lieu of taking "outside" training from an authorized company. Contractor's program shall follow the guidelines of NFPA 70E and thoroughly demonstrate that all employees have been properly trained in all facets associated with NFPA 70E. If the Contractor decides to provide his/her own NFPA 70E training, Contractor's program shall be submitted to BNL for approval. All Contractor and Subcontractor employees that "Work On or Near" electrical circuits shall have taken and passed a CPR training program that has been approved by BNL.

M. Pre-Construction Meeting:

1. MPO will set up a Pre-Construction Meeting, at which time the ES&H issues, Safety Awareness issues, Submittal procedures, and Site Organization procedures will be addressed. The Contractor's Superintendents, Supervisors and Foreman are required to attend the Pre-Construction Meeting.

N. Construction Schedule and Notification:

1. Within three (3) weeks after signed Contract, submit, directly to MPO, a detailed work schedule showing the work being completed by the Contract completion date. Coordinate with Section 01300 "Submittals".

2. MPO must be notified and made aware of all construction work in progress. MPO will provide appropriate telephone extension numbers for notifications.

3. When construction has not been previously scheduled, notify MPO Construction Inspector each day before 8:30 a.m. of planned activities.

4. Special scheduling, when appropriate, will be agreed upon at a meeting, set up by MPO, to prepare a rough work schedule. The Contractor shall respond, within one (1) week, with a formal work schedule.

5. When work falls behind schedule due to Contractor's fault or negligence, increase all labor and overtime to assure completion within schedule.

6. Do not utilize men or materials which would cause work stoppage on BNL Site.

   a. Radiation Generating Devices are of special concern. The following industrial equipment, known to contain radiological sources or able to generate radiation, if brought to the BNL Site, require the Contractor to notify the Project Manager, in advance, and require a Radiological Work Permit to be approved prior to their use on site. RWPs require Health Physics review.

      1) Radiography Equipment

      2) Moisture Density Gauges

      3) Soil Density Gauges

      4) X-Ray Equipment

7. BNL's presence is required during all off hour work. For off hour work not specified, the Contract will be backcharged on an hourly rate based on BNL's published "Standard Rates Distributed Technical Services" schedule of direct expense recovery rate for engineering construction services. The rate schedule is available through MPO. This backcharge includes off hour work directed by BNL due to the Contractor's failure to meet schedule completion dates.

8. BNL will utilize all available contractual remedies to enforce schedule compliance. Should the Contractor encounter delays caused by BNL, it is the Contractor's responsibility to promptly notify the contracting officer and to request an extension of the contract compliance date.

O. Subcontractor Approval:

1. BNL reserves the right to approve or disapprove Subcontractors. Submit to the MPO all proposed Subcontractors for approval. Coordinate with Section 01300 "Submittals".

P. Coordination:

1. Arrange and coordinate work, be responsible for acts and omissions of all parties involved in the work, be responsible for satisfactory performance of all work, ensure that each trade is fully informed of full extent of work required. Work of a trade is not necessarily limited to the Drawing or Specification page describing the work to be done by that trade.

2. Coordinate installation of all equipment and shop fabricated material, including that supplied by BNL. BNL assumes no responsibility for contractual relations between Contractor and other parties.

3. Coordinate and schedule all work with all BNL activities and operations through MPO.

Q. Transport and Traffic:

1. Schedule, confine, and perform work, as directed, so as not to interfere with BNL traffic on existing roads, walks, parking and other paved areas. Park all vehicles in designated parking areas. Load and unload vehicles where directed. Comply with all BNL traffic regulations. Violations will be backcharged from the Contract amount.

2. In transporting materials and equipment, use designated roads and railroad on BNL Site. Obtain information concerning these facilities from MPO. When necessary to maintain work schedule, ship all materials, including Subcontractors' items, from point of origin to BNL Site by direct means equal to, or better than, express service.

3. In transporting radioactive materials and waste, or hazardous waste, a DOE-MCAP approved transporter must perform the transportation. The MPO Waste Management Representative will coordinate all shipments of radioactive materials and waste, or hazardous waste.

4. Shipments requiring a manifest (radioactive or hazardous) shall be prepared by a qualified broker. The broker shall sign as the shipper of record for radioactive shipments, with a qualified BNL Waste Management Representative approving the document. A Hazardous Waste Manifest shall be prepared by a qualified broker and signed by a BNL Waste Management Representative.

5. Obtain property pass through MPO for removal of Contractor's materials and equipment from BNL Site. Schedule removals during specified work hours.

R. Open Flame Operations:

1. It shall be the duty and responsibility of the Contractor performing any cutting or welding to comply with the provisions of BNL Standards-Based Management System; ES&H Standards, and the National Fire Protection Association's National Fire Codes pertaining to such work. The Contractor shall read and be familiar with the provisions of these standards and codes. The Contractor shall be responsible for all damages resulting from failure to so comply.

2. Notify MPO forty-eight (48) hours in advance of cutting, welding, or similar open flame operations.

3. Provide any required fire watch and take all required precautions where directed.

4. MPO will make arrangements for a Cutting/Welding Permit. No open flame operations shall proceed prior to the issuance of the written Cutting/Welding Permit nor shall work continue after expiration date of permit.

S. Protection of Property:

1. Contractor shall be responsible for the security of property within the Work Site.

2. Protect, with whatever means and methods required, all new and existing property from damage by and as a result of work in this Contract as approved, including disappearance. Refer to Attachment A, Article 14, Contractor’s Responsibilities.

3. Repair, refinish, replace and otherwise correct all damage, and replace any missing materials, as directed and approved by MPO.

T. Service and System Interruptions:

1. Do not interrupt service until directed. Notify MPO two (2) weeks in advance of all proposed service interruptions unless otherwise specified or directed.

2. Keep all interruptions to a minimum. Complete all possible prior work and prefabrication, and have all labor and materials on Site, as approved, prior to interruption.

3. Do not modify, disconnect and, in any way, impair fire protection and detection systems without approval.

4. Notify MPO forty-eight (48) hours in advance of all work on fire protection systems.

U. Cutting, Patching, and Penetrations:

1. Cut, drill, alter, remove, and replace all existing construction as required for performance of work. Patch and finish all changed and damaged work to match existing construction as approved.

2. Seal all penetrations through fire rated systems with an approved fire and/or smoke stop material, Hilti North American Fire Stopping Systems, or equal as approved by MPO, capable of maintaining the level of fire protection of the wall, partition, floor or ceiling penetrated.

   a. Systems selected shall be appropriate for the joint and/or penetration involved, such as floor to floor, wall to wall, floor to wall, head of wall, and whether there is movement or no movement capability.

V. Job Meetings:

1. Job meetings will be held at the job site at least monthly unless otherwise designated by MPO.

2. The Contractor and his field superintendent, and the subcontractors or vendors whose presence is necessary, shall attend job meetings.

3. Decisions, instructions and interpretations agreed upon at such meetings will be recorded in a "Memorandum of Meeting" prepared by MPO and furnished to the Contractor and each attendee for necessary action.

W. Salvage:

1. Salvage is that material and equipment, as defined in the Specifications, to be removed by the Contractor from the Project facility, but is to remain the property of BNL.

2. Remove all specified salvageable material and equipment and pass it through the vehicle radiation monitor. Place, where directed by, and turn over to, MPO, on the BNL Site.

3. Remove all non-salvageable material and equipment and legally dispose of same off the BNL Site.

4. All removed salvageable material and equipment, as defined in the Specifications, shall remain property of BNL.

5. All removed non-salvageable materials and equipment shall pass through the vehicle radiation monitor prior to exiting the BNL site.

X. Construction Waste Management:

1. Waste and demolition materials shall be segregated into disposal categories:

   a. Radioactive waste is any refuse, solid or liquid, that must be managed for its radioactive content.

   b. Hazardous waste is any refuse, solid or liquid, that is a by-product of processes/activities that can pose a hazard to health or environment that must be managed for its hazardous nature (usually listed by EPA).

c. Mixed waste is any refuse that contains both Low-Level Radioactive Waste (LLRW) as well as hazardous waste.

d. Non-hazardous waste is any refuse, other than construction debris, that is considered industrial or special in nature (oil, anti-freeze, etc.). The BNL Standards-Based Management System (SBMS) contains the full descriptions.

e. Universal waste is any battery containing hazardous constituents such as mercury/lithium/ lead/nickel cadmium, certain pesticides, as well as mercury-containing thermostats and fluorescent lamps and tubes.

f. Construction rubbish and debris is any refuse as a result of the normal construction or earth clearing activity such as packing and shipping materials, discarded lumber and wood materials, metals, insulation, gypboard, piping, electrical scrap, tree branches, roots, and sweepings.

2. Radioactive waste and mixed waste disposal will be coordinated by the MPO Waste Management Representative, Gary Olsen, (631) 344-8580.

3. Hazardous waste and mixed waste shall be disposed of by the Contractor at the BNL Waste Management Facility, or at an approved off-site facility coordinated by the MPO Waste Management Representative.

4. Universal waste shall be disposed of by the Contractor at the BNL Waste Management Facility, or at an approved off-site facility coordinated by the MPO Waste Management Representative.

5. Non-hazardous waste shall be disposed of by the Contractor at the BNL Waste Management Facility, or at an off-site disposal facility approved by BNL.

6. Construction rubbish and debris shall be disposed per Section 01800.

END OF SECTION

Revision History	
Date	**Rev. No.**
F	0
02-19-09	0

SECTION 00800

SUPPLEMENTARY CONDITIONS

A. Substantial Completion:

1. Substantial Completion is the stage in the progress of the Work when the Work or a designated portion thereof is sufficiently complete, as determined by MPO in accordance with the Contract Documents, so as to be able to be occupied or utilized for its intended use.

B. BNL-Supplied Items:

1. BNL will supply certain pre-purchased items for installation by the Contractor. Provide support systems to receive the equipment at the project site, and mechanical and electrical connections.

2. BNL will arrange and pay for delivery to the project site in accordance with the Contractor's Construction Schedule, and inspect deliveries with the Contractor for damage.

3. If items are damaged, defective or missing, BNL will arrange for replacement. BNL will arrange for manufacturer's field services, and delivery of warranties and bonds to the Contractor.

4. The Contractor shall designate delivery dates in the Contractor's Construction Schedule and shall receive, unload and handle items at the site. The Contractor is responsible for protecting items from damage, including damage from exposure to the elements, and for repair or replacement of items damaged as a result of his operations.

5. Shop Drawings and Manufacturer’s Data will be available at MPO.

6. Check all items in presence of MPO Construction Services Representative to insure they are complete with all parts and appurtenances, and free from damage. Move items from point of delivery on the project site and completely install and connect. Handle all items with care.

7. List of BNL-Supplied items:

   a. Son-oxide system

C. Safety Requirements:

1. All Contractor and Subcontractor employees are required to attend BNL's Contractor/Vendor Orientation Training (see Section 00700.N, General Conditions).

2. All Contractor and Subcontractor employees who work on or near energized parts as defined in NFPA 70E shall complete the Electrical Safety 1 Training Course. The course is available on the Web at http://training.bnl.gov/course/elecsaf1, and is valid for one (1) year. In addition to completing this course, each organization’s Electrical Work Supervisor must discuss the “Standard for Electrical Safety in the Workplace” (NFPA 70E) requirements and specific hazard(s) and risk information with their staff. This job briefing should discuss specific electrical

work procedures and protective equipment requirements required to accomplish the work of this Contract. This job level discussion can be informal; however, a record of this briefing shall be documented. All Contractor and Subcontractor employees that "Work On or Near" electrical circuits shall have taken and passed a CPR training program that has been approved by BNL.

3. MPO will arrange and ESH&Q Division will provide additional safety instructions, as required. All personnel shall conform to special requirements for wearing TLD's, personal protective equipment, protective clothing, respirators, and other safety measures as required. TLD's, only, will be provided by BNL at no charge, unless otherwise specified.

D. Industrial Hygiene Monitoring:

1. All work on this Project with regard to, and of, the conditions listed must be done within the occupational exposure limits for Industrial Hygiene hazards set in OSHA 29CFR1926, 29CFR1910, and ACGIH *Threshold Limit Values*®. Compliance with the OSHA Permissible Exposure Limits and American Conference of Governmental Industrial Hygienists (ACGIH) *Threshold Limit Values*® shall be determined by representative personnel exposure monitoring and dosimetry conducted by the Contractor and his Industrial Hygienist. Monitoring shall be continuously performed during the total duration of the hazardous condition. The details of the project's exposure monitoring equipment, methods, and monitoring strategy shall be included in the Contractor's Environmental, Health and Safety Plan. Conditions that require industrial hygiene monitoring include, but are not limited to:

   a. Asbestos

   b. Beryllium

   c. Working with Chemicals, Adhesives, or Lead

   d. Release of Silica (grinding, drilling, core boring, jackhammering of concrete, masonry, mortar, etc.)

   e. Confined Spaces

   f. Heat Stress

   g. Carcinogens

   h. Noise and Hearing Conditions

   i. RF/Microwave/Non-Ionizing Radiation

   j. Static Magnetic Fields

2. The Contractor is required to provide qualified monitoring and hazard assessment personnel (per DOE G440.1-3 *Occupational Exposure Assessment*) to conduct all Industrial Hygiene monitoring.

3. The Contractor is required to conduct monitoring with calibrated equipment using NIOSH or OSHA approved methods, and to have analysis conducted by an American Industrial Hygiene Association (AIHA) Proficiency Analytical Testing certified laboratory or by National Institute of Standards and Technology (NIST) traceable calibrated direct reading instrumentation. All instrumentation used for surveys shall have been calibrated in compliance with the manufacturer's specification prior to use in the field.

4. Copies of all equipment calibration, field sampling sheets, laboratory analysis reports, and hazard assessment evaluation reports are to be provided to MPO, in accordance with the Shop Drawings, Manufacturers Data, and Samples Section of these Specifications.

E. Welding Inspections:

1. Radiographic examination of welds shall not be performed by the Contractor.

2. BNL reserves the right to perform radiographic (x-ray) welding inspections on any welds performed by the Contractor under this contract that appear, after visual inspection, not to comply with the Specifications.

F. Wildfire Danger:

1. This work will be performed in a wildland area of BNL, where brush fires are a real concern. The Contractor shall ensure that the conduct of operations minimizes the potential of the occurrence of wildland fires.

2. Preventing the parking of vehicles on grassy areas with engines running, and control of disposal of smoking materials, is the responsibility of the Contractor's Safety Representative.

3. Ensure gasoline-engine-driven portable generators and air compressors are equipped with spark arresters and that personnel are aware of fire break names if calls to the Fire Department [Ext. 2222 or (631) 344-2222] become necessary.

G. Schedule of Values:

1. Contractor shall submit no later than 2 weeks after contract signing the following Schedule of Values breakdown. Separate the Construction Safety costs from the cost figure for General and Special Conditions, and list separately:

   a. General Conditions

   b. Payment and Performance Bonds

   c. Occupational Medicine Program

   d. Construction Safety

   e. Mobilization

   f. LEED Requirements

g. Utilities – Switch Yard:

1) Earthwork and Site Preparation

2) Concrete Equipment Pads

3) Transformer and Switchgear

4) Manholes

5) Firewall

6) Fencing

7) Grounding

8) 15kV Ductbank and Cable

9) 480V Ductbank and Cable

h. Site Work – General:

1) Outdoor Lighting

2) Asphalt

i. Underground Piping:

1) Excavation and Site Preparation

2) Condenser Water Piping

3) Backfill and Compaction

j. Building 600:

1) Excavation and Site Preparation and Erosion Control

2) Shoring

3) Concrete Footings and Foundation

4) Building Backfill and Compaction

5) Paving

6) Concrete Slabs and Decks

7) Concrete Walls

8) Metal Deck

9) Structural Frame

10) Roof

11) Exterior Walls

12) Domestic Water Piping

13) Sprinkler System

14) Floor Drains and Piping

15) Sanitary Piping

16) Storm Water Piping

17) Compressed Air Piping

18) Instrumentation and Control System

19) Chillers 5 and 6 Delivery

20) Chillers 5 and 6 Installation

21) Chilled Water Secondary Pumps

22) Condenser Water Pumps

23) Chiller Installation

24) Refrigeration Gas Detection System

25) HVAC Equipment

26) Ductwork

27) HVAC Controls and EMCS

28) Electrical Power Equipment

29) Electrical Conduit Installation

30) Electrical Wire and Cable

31) Electrical Devices

32) Building Grounding

33) Lighting

34) Locker Room Fixtures

35) Chilled Water Piping

36) Condenser Water Piping

37) Steam and Condensate Piping

38) Steam Reducing Station

39) Telephone and Data Systems

40) Paging System

41) Fire Alarm System

42) Painting

43) Piping Insulation

44) Duct Insulation

45) Interior Architectural

k. Building 600A (Pumphouse):

1) Excavation and Site Preparation

2) Concrete Footings and Slab

3) Backfill and Compaction

4) Structural Frame

5) Pre-Engineered Building

6) Sanitary Piping

7) Compressed Air Piping

8) Chilled Water Piping

9) HVAC Equipment

10) Chilled Water Primary Pumps

11) Bypass Control Valve

12) Primary Pump Control Valves

13) Electrical Equipment

14) Electrical Conduit Installation

15) Electrical Wire and Cable

16) Lighting

17) Instrumentation and Control

l. Cooling Tower System:

1) Excavation and Site Preparation

2) Concrete Basin

3) Cooling Tower Equipment

4) Cooling Tower Installation

5) Piping and Control Valves

6) Electric Conduit and Wiring

7) Heat Trace System

8) Instrumentation and Controls

9) Ductbank and Manholes

10) Temporary Basin Cover

m. Sonoxide Water Treatment System

n. Control System Commissioning

o. As-Built Drawings

p. O&M Manuals

q. Alternate No. 1

r. Alternate No. 2

s. Alternate No. 3

H. LEED Submittals:

1. Refer to Section 01352L – LEED Requirements, for type, required submittals, credits, options and other specifics required of the Contractor for this project.

I. Special Service Interruptions:

1. Refer to General Conditions, Clause 00700.W, Service and System Interruptions.

2. Service interruptions may occur only when permitted during scheduled shutdowns.

3. Scheduled shutdowns for Chilled Water must occur between November and April.

4. Notify MPO four (4) weeks in advance of all proposed service interruption unless otherwise specified or directed.

5. All materials, prefabricated where directed, and labor must be on Site before a shutdown will be permitted.

6. Increase labor force, use overtime or both, as directed, to insure completion of work in specified time. Include all overtime costs required to complete installation.

7. Work requiring a power shutdown, must be completely installed, tested, and ready for use in a period not to exceed time specified by MPO.

J. Surveys and Stakeout:

1. MPO will establish base lines and bench marks at the site of the work from which the Contractor shall complete the layout of the work to be performed under the Contract. From the basic data established by MPO, the Contractor shall establish reference control points and complete the layout of the work.

2. In addition, MPO will mark and/or stake out all known underground utility locations. Locations are approximate. Contractor shall be responsible to maintain the markings and/or the stakeouts for as long as they are required. Any excavating near these locations shall be by hand to locate utilities exactly.

3. The Contractor shall be responsible for all measurements that may be required for execution of the work to the exact position and elevation as prescribed in the specifications, shown on the drawings, or as the same may be modified at the direction of MPO to meet changed conditions or as result of modification to the Contract.

4. Further, the Contractor shall be responsible for the establishment of points, wall and partition lines required by the Subcontractors in laying out their work.

5. The Contractor shall furnish such stakes and other required equipment, tools and materials, and all labor as may be required in laying out any part of the work from the base lines and bench marks established by MPO.

6. If, for any reason, bench marks and/or utility location markings, monuments are disturbed, it shall be the responsibility of the Contractor to re-establish them, without cost to BNL, as directed by MPO. MPO may require that construction work be suspended at any time when location and limit marks established by the Contractor are not reasonably adequate to permit checking completed work or the work in progress.

7. MPO will back charge the Contractor for any re-establishment of stakeouts performed by BNL that were disturbed by the Contractor.

K. Construction Safety:

1. The Contractor is solely responsible for Construction Safety for the duration of this Contract. Contractor shall prepare and submit a Construction Safety Plan within two (2) weeks of the Contract signing and before the commencement of any work on site. A Safety Plan Outline with an Occupational Medicine Program example is available from MPO and copies will be handed out at the Pre-Bid meeting. This plan will be reviewed and approved by BNL and shall include the following:

   a. Specific assignment of an individual, employed by the Contractor and named in the Plan, as well as one (1) alternate, as Safety Representative, who will be responsible for job site construction safety. The Safety Representative and alternate must demonstrate, with verification of completion of the "30-Hour OSHA Compliance for the Construction Industry" construction safety course, and familiarity with 29 CFR 1926, the ability to supervise the type of work for which they will be responsible. Sources for training can be obtained from MPO. The Safety Representative or alternate shall be on the Project Site whenever construction activities are being performed.

   b. A letter or certificate of compliance indicating that the Contractor is aware of, and has reviewed, and will comply with the safety regulations of OSHA Standards (29 CFR 1926/1910), ES&H Standards in the BNL Standards-Based Management System, and the Standard for Electrical Safety in the Workplace (NFPA 70E).

   c. A descriptive outline of the Contractor's safety program indicating:

      1) Provisions for emergency aid.

      2) Excavation safety including specific identification of "Competent Person" (per OSHA), including his/her qualifications. Competent Person must have had formal training, have knowledge of existing standards, and have authority to take actions deemed necessary.

      3) A comprehensive occupational medicine program, under the direction and control of an occupational medicine physician, that provides these services in full compliance with all provisions of Section 8 ("Occupational Medicine") of Appendix A of the Federal Regulations 10 CFR 851 ("the Rule"), including the following provisions:

         a) plans and implements the occupational services,

         b) is, or is under the direction of, a physician licensed in the state of New York,

         c) is staffed by health care professionals with valid New York State licenses in their respective professions,

d) determines the content of the worker health evaluations in accordance with current sound and acceptable medical practices and all pertinent statutory and regulatory requirements.

4) A program for training employees in the recognitions and avoidance of unsafe conditions and in the safety regulations applicable to this project. The construction contractor shall conduct informal "tool box" safety and health training sessions at least weekly for all employees on the worksite. Depending on the size and nature of the project, this may be accomplished in single or multiple sessions and may address different topics for different work crews. Outlines of all "tool box" training sessions shall be prepared by the construction contractor and annotated with the date, time, and names of all employees in attendance.

5) A program certifying that all service, maintenance, and/or construction of electrical equipment is performed in strict compliance with NFPA 70E. All Contractors and service providers must be trained in NFPA 70E and wear the appropriate PPE. See General Conditions, Clause O for Contractor training requirements.

6) A program certifying that all temporary staging, platforms, scaffolding, planking, bracing, scaffold towers and walkway work is to be designed, erected, used and maintained, and dismantled in accordance with OSHA 29 CFR 1926, BNL SBMS and Modernization Project Office ES&H-802. The Contractor's Competent Person shall have been formally OSHA-trained in scaffolds standards and safety and shall assure that all personnel engaged in the erection and/or dismantling of scaffolding have been OSHA-trained in the proper scaffold procedures and precautions. The Contractor's Competent Person shall also assure, through Tool Box training at the Site, that all personnel working on or from the scaffolds have been trained in the proper procedures and precautions while using the scaffolding.

7) A program to provide for the frequent and regular inspection and reporting of job site conditions relating to safety. An inventory of all chemicals used to perform the work, with their material safety data sheets, shall be maintained at the job site.

8) A program certifying the safe operating condition and assuring the proper maintenance of earth moving equipment, cranes, vehicles and other such equipment, including an environmental protection spill prevention plan. A Rigging Plan shall be submitted in accordance with the conditions noted in the Supplementary Conditions clause, "SHOP DRAWINGS, MANUFACTURERS DATA, AND SAMPLES", above, whenever this equipment is to be used on Site.

9) A program certifying the safe operating condition and assuring the proper maintenance of permanent and/or temporary light, power and electrical equipment, including protective devices (GFCI) for portable electric tools.

10) Provisions through meetings, established contacts or other means, for the mutual exchange of information with contractor and subcontractor personnel on:

- Changes in scope of work
- Recognized hazards
- Identified inspection deficiencies
- Future phases of work
- Potential problem areas
- Coordination of crafts

11) Upon approval of the Safety Plan, the Contractor shall make any revisions noted and resubmit five (5) copies of the Plan to MPO for distribution.

2. All workers shall be able to comprehend the scope of work and safety instructions required to perform the job. All workers employed by the Contractor and the Sub-Contractor shall acknowledge, in writing, that they have read and understood the Project Safety Plan. If workers cannot read or speak English or are hearing impaired, an interpreter shall be provided by the contractor to ensure that the scope of work, information regarding hazards associated with the work-site, and safety requirements are relayed to them in a manner in which they can understand. The interpreter shall sign that he has explained the plan, and shall be at the work-site whenever these workers are on the job. The approved Safety Plan shall be available at the job site to all Contractor and Sub-Contractor employees.

3. When Confined Space Entry is required, the Contractor shall have a written Confined Space Entry Program which complies with OSHA and BNL standards.

a. The program will require the Competent Person (as defined by OSHA) to:

1) Establish procedures and practices for safe entry and to determine if a permit is required.

2) Have air monitors to check concentration of oxygen, explosive/flammable gases and the specific contaminants of concern (e.g. hydrogen sulfide in sewer utility holes).

3) Test and monitor conditions to identify and evaluate hazards.

4) Prevent unauthorized entry.

5) Station an attendant outside permit spaces during entry.

6) Post procedures to summon rescuers and prevent unauthorized personnel from attempting rescue.

7) Develop a system for preparing, issuing, using, and canceling entry permits.

b. Permits are required to include an identification of the confined space, its hazards, a list of authorized entrants, the purpose of their entry, and the date and duration of their permits; the current attendants and entry supervisor; and both the results of tests performed and any measures necessary to isolate the permit space and eliminate or control the hazards. The permit must also describe the acceptable entry conditions, emergency equipment and the means to summon rescue and emergency services.

c. Authorized entrants into confined spaces must be trained to be aware of any hazards they may face and be able to recognize signs and symptoms of exposure. They must also be familiar with any emergency equipment in the confined space.

4. The Contractor shall be required to include the applicable safety requirements in all contracts with all tiers of subcontractors.

5. Prior to the start of construction, a pre-construction meeting shall be scheduled with the Contractor to review specific safety requirements of the project.

6. Lock-Out/Tag-Out is the required method of control when performing service, maintenance, or construction around any machinery where personnel could be injured by startup of the equipment or release of stored energy. A Lock-Out/Tag-Out program shall be included in the Construction Safety Plan that complies with OSHA and is tailored to BNL's LOTO program. Sources of energy shall be, but not limited to, mechanical (kinetic/potential), electrical, electromagnetic, chemical, thermal, hydraulic, and pneumatic. Contractor shall provide his own locks (types specified by BNL), lockout devices, and red tags for Lock-Out/Tag-Out of energy sources(s). A logbook shall also be maintained and kept in a designated area assigned by BNL.

a. It is BNL Policy that working on or near energized electrical circuits will only be allowed when all methods available to perform the work in a de-energized state have been evaluated and determined to be infeasible. Working on or near energized conductors is subject to the restrictions and provisions of the Standard for Electrical Safety in the Workplace (NFPA 70E), and BNL Procedure MPO-ESH-102 Electrical Safety.

b. In order to comply with this Policy, the Contractor shall ensure that all employees who may be required to "Work On or Near" electrical circuits within the BNL AC Distribution System and all associated equipment shall be authorized employees. An authorized employee is deemed as an individual who has been qualified in the skills and knowledge related to the service, maintenance, construction and/or operation of electrical equipment and installations, and has received safety training on the hazards involved, including the wearing of the appropriate personal protective equipment (PPE).

c. BNL shall have the ability to request the Contractor to provide the appropriate documentation, which will clearly indicate the qualifications and training of any and/or all employees performing such work.

d. Contractor will arrange for the issuance of a "Working On or Near" Permit as required by the above stated Policy and MPO-ESH-102 Electrical Safety. The Contractor shall give BNL a minimum of 48 hours notice of any requirement to "Work On or Near" to allow time for the BNL permitting process. Working on or near operations that only involve testing, diagnostic work, and/or service tasks on equipment for voltages less than 600 Volts AC to ground may be covered by a testing, troubleshooting, and voltage monitoring energized work permit, which may cover the entire project period. Operations involving "Working On or Near" for voltages greater than 50 Volts AC to ground may require a specific "Working On or Near" Permit for each work situation required. Work will proceed when the "Working On or Near" Permit is completed and all parties performing the work have been informed of the hazards involved and what PPE is to be worn. An authorized Supervisor from the Contractor who is performing the work and a BNL designated Manager must sign the permit before any work can be performed.

7. Concrete and/or Masonry Penetrations are of specific safety concern at BNL. It is BNL policy that the Contractor ensure safe penetration into or through any existing concrete or masonry surface.

a. BNL Standards-Based Management System, ES&H Standards and Facilities & Operations Policies and Procedures shall be followed, including the completion of appropriate Penetration Permits and the provision and use of utility locating/detecting equipment.

b. In order to comply with these guides, the Contractor shall provide trained "Authorized Employees" and shall submit, for MPO review and approval, the name and type of the utility locating/detecting equipment to be used, as well as the specific names of the trained personnel who will perform the locating task with this equipment and who will execute the penetration work.

c. Non-aggressive penetrations cannot be executed without first using utility locating/detecting equipment and obtaining approval by MPO.

d. Aggressive penetrations cannot be executed without first using utility locating/detecting equipment followed by the completion and approval of a MPO Aggressive Penetration Permit.

8. No work at the Site will be permitted to proceed and no payment requisitions will be authorized until the Construction Safety Plan is submitted and approved. Contractor shall proceed, however, with ordering of equipment and materials upon Contract signing, as specified in Section 01300.

9. BNL will not tolerate non-adherence to safety requirements under this Contract. These requirements shall include, but not be limited to, all applicable OSHA Safety requirements, the BNL Standards-Based Management System; ES&H Standards, all applicable codes and regulations, and the approved Safety Plan. Failure to comply will result in BNL's direction to stop work in accordance with Article 27 of Attachment A. Non-compliance could also mean the barring of the violating individuals from the BNL Site. Repeated safety violations may also result in a permanent Work Stoppage under Article 30.

10. A draft Work Permit is included at the end of this Section. Contractor shall address all issues and concerns noted on this Work Permit within the Construction Safety Plan.

END OF SECTION

Revision History	
Date	**Rev. No.**
F	0
02-19-09	0

BROOKHAVEN NATIONAL LABORATORY

DRAFT

Work Permit # ____
Work Order # ____
Job# 11705 Activity# 01300/01300

1. Work requester fills out this section. ☐ **Standing Work Permit**

Requester: A. Raphael	Date: 1/20/09	Ext.: 5854	Dept/Div/Group: MPO
Other Contact person (if different from requester):			Ext.:
Work Control Coordinator: R. McKay		Start Date: Spring 2009	Est. End Date: Spring 2011
Brief Description of Work: Construct CCWF II Addition to Bldg. 600			
Building: 600	Room:	Equipment:	Service Provider: TBD

2. WCC, Requester/Designee, Service Provider, and ESS&H (as necessary) fill out this section or attach analysis

ESS&H ANALYSIS

Radiation Concerns	☒ None	☐ Activation	☐ Airborne	☐ Contamination	☐ Radiation	☐ NORM	☐ Other
☐ Special nuclear materials involved, notify Isotope Special Materials Group					☐ Fissionable materials involved, notify Laboratory Criticality Officer	
Radiation Generating Devices:	☐ Radiography	☐ Moisture Density Gauges			☐ Soil Density Gauges	☐ X-ray Equipment

Safety and Security Concerns	☐ None	☐ Explosives	☐ Transport of Haz/Rad Material	
☒ Adding/Removing Walls or Roofs	☐ Critical Lift	☒ Fumes/Mist/Dust*	☐ Magnetic Fields*	☒ Pressurized Systems
☐ Asbestos*	☐ Cryogenic	☒ Heat/Cold Stress	☐ Nanomaterials/particles*	☐ Railroad Work
☐ Beryllium*	☒ Electrical	☐ Hydraulic	☒ Noise*	☒ Rigging
☐ Biohazard*	☒ Elevated Work	☐ Lasers*	☐ Non-ionizing Radiation*	☒ Security Concerns
☐ Chemicals/Corrosives*	☒ Excavation	☐ Lead*	☐ Oxygen Deficiency*	☒ Suspect/Counterfeit Items
☒ Confined Space*	☐ Ergonomics*	☒ Material Handling	☐ Penetrating Fire Walls	☐ Vacuum
* Industrial Hygiene (IH) Review Required				☒ Other Ticks/chiggers

Environmental Concerns	☐ None	☐ Work impacts Environmental Permit No.	
☐ Atmospheric Discharges (rad/non-rad)	☐ Land Use Institutional Controls	☐ Soil Activation/contamination	☐ Waste-Mixed
☐ Chemical or Rad Material Storage or Use	☐ Liquid Discharges	☒ Waste-Clean	☐ Waste-Radioactive
☐ Cesspools (UIC)	☐ Oil/PCB Management	☐ Waste-Hazardous	☐ Waste-Regulated Medical
☐ High water/power consumption	☐ Spill potential	☐ Waste-Industrial	☐ Underground Duct/Piping
Waste disposition by: MPO			☐ Other
Pollution Prevention (P2)/Waste Minimization Opportunity:	☒ No ☐ Yes		

FACILITY CONCERNS	☐ **None**		
☒ Access/Egress Limitations	☐ Electrical Noise	☒ Potential to Cause a False Alarm	☐ Vibrations
	☒ Impacts Facility Use Agreement	☐ Temperature Change	☒ Other Work around existing facility
☒ Configuration Control	☐ Maintenance Work on Ventilation Systems	☒ Utility Interruptions	

WORK CONTROLS

Work Practices

☐ None	☒ Exhaust Ventilation	☒ Lockout/Tagout	☐ Spill Containment	☒ Security (see Instruction Sheet)
☒ Back-up Person/Watch	☐ HP Coverage	☒ Posting/Warning Signs	☐ Time Limitation	☐ Other
☒ Barricades	☐ IH Survey	☒ Scaffolding-requires inspection	☐ Warning Alarm (i.e. "high level")	

Personal Protective Equipment

☐ None	☒ Ear Plugs	☒ Gloves	☐ Lab Coat	☒ Safety Glasses	
☐ Coveralls	☐ Ear Muffs	☐ Goggles	☐ Respirator*	☐ Safety Harness	
☐ Disposable Clothing	☐ Face Shield	☒ Hard Hat	☐ Shoe Covers	☒ Safety Shoes	☒ Other Traffic vest, welding ppe

Permits Required (Permits must be valid when job is scheduled.)

☐ None	☒ Cutting/Welding	☒ Impair Fire Protection Systems
☒ Concrete/Masonry Penetration	☒ Digging/Core Drilling	☐ Rad Work Permit-RWP No
☒ Confined Space Entry	☐ Electrical Working Hot	☐ Other

Dosimetry/Monitoring

☐ None	☐ Heat Stress Monitor	☐ Real Time Monitor	☐ TLD
☐ Air Effluent	☒ Noise Survey/Dosimeter	☐ Self-reading Pencil Dosimeter	☐ Waste Characterization
☐ Ground Water	☒ O_2/Combustible Gas	☐ Self-reading Digital Dosimeter	☐ Other
☐ Liquid Effluent	☐ Passive Vapor Monitor	☐ Sorbent Tube/Filter Pump	

Training Requirements (List specific training requirements)

CVO, Electrical Safety

Based on analysis above, the Walkdown Team determines the risk, complexity, and coordination ratings below:				**If using the permit when all hazard ratings are low, only the following need to sign: (Although allowed, there is no need to use back of form)**	
ESS&H Risk Level:	☐ Low	☒ Moderate	☐ High	WCC:	Date:
Complexity Level:	☐ Low	☒ Moderate	☐ High	Service Provider:	Date:
Work Coordination:	☐ Low	☒ Moderate	☐ High	Authorization to start	Date:
				(Departmental Sup/WCC/Designee)	

3. Both work requester and service provider contribute to work plan (use attachments for detailed plans)

Work Plan (procedures, timing, equipment, and personnel availability need to be addressed):
Contractor to address each concern in the project ESH Plan.

Special Working Conditions Required (e.g., Industrial Hygiene hold points or other monitoring)

Notifications to operations and Operational Limits Requirements:

Post Work Testing, Notification or Documentation Required:

Job Safety Analysis Required: ☐ Yes ☒ No | Walkdown Completed (Required): ☐ Yes

Reviewed by: Primary Reviewer signature means that the hazards and risks that could impact ESS&H have been identified, a Walkdown was completed and the hazards will be controlled according to BNL requirements.

Title	Name (print)	Signature	Life #	Date
Primary Reviewer	A. Raphael	[illegible]	19856	2/2/09
ES&H Professional	D. Famam	[illegible]	20179	2/3/09
Building Manager	W. Chaloupka/R. McKay	[illegible]	14691	2-9-09
Service Provider	TBD			
Work Control Coordinator	R. McKay/M. Toscano	[illegible]	19188	2/3/09
Safety and Health Services (i.e. IH Rep)	F			
Other	F. Zanoni	Furoza Zanoni	22856	2/9/09
	Review Done: ☐ in series	☐ team		

4. Job site personnel fill out this section.

Note: Signature indicates personnel performing work have read and understand the hazards and permit requirements (including any attachments).

Job Supervisor:		Contractor Supervisor:	
Workers:	Life#:	Workers :	Life#:

Workers are encouraged to provide feedback on ESS&H concerns or on ideas for improved job work flow. Use feedback form or space below.

5. Department/Division Line Manager or Designee

Conditions are appropriate to start work: (Permit has been reviewed, work controls are in place and site is ready for job.)

Name:	Signature:	Life#:	Date:

6. Worker provides feedback.

Worker Feedback (use attached sheets as necessary)

a) WCM/WCC: Are there any changes as a result of worker feedback? ☐ Yes ☐ No

Note: See work planning and control subject area section 2.6.

7. Post Job Review/Closeout: Work Control Coordinator (authorizing dept.) checks quality of completed permit and ensures the work site is left in an acceptable condition. (WCC can delegate clean up of work area to work supervisor.) The WCC ensures that the change process to update drawings, placards, postings, procedures, etc. are initiated , if necessary.

Name:	Signature:	Life#:	Date:

Comments:

SECTION 01010

SUMMARY OF WORK

PART 1 GENERAL

1.1 SUMMARY

A. Description

1. The work of this Central Chilled Water Facility expansion Contract shall include all labor, material, equipment and administrative tasks required to provide a complete and operable Chilled Water Facility as shown on the Drawings and specified herein. The Work includes interfacing and connecting to existing facilities and systems.
2. The following outline highlights the principal elements of the scope of work for the Base Bid and Alternate Nos. 1 and 2 for this Contract:
   a. Under Alternate No. 1 submit the amount to be added to the Base Bid if the instrument air compressor and air dryer, as described in paragraph 4a, are added.
   b. Under Alternate No. 2, submit the amount to be added to the Base Bid if the chiller condenser tube brush cleaning system, as described in paragraph 4b, is added.
   c. Under Alternate No. 3, submit the amount to be added to the Base Bid if the two (2) Wonderware Intouch 9.5 HMI stations, as described in paragraph 4c, are added
3. Base Bid: Central Chilled Water Facility Expansion (CCWF)
   a. Civil Work, including but not limited to: site clearing, grubbing, removal of trees top-soil, earthwork, grading, erosion control, cooling tower, bituminous paving and underground utilities. Top-soil and excavated earth disposal on-site as directed by BNL.
   b. Architectural Work, including but not limited to: providing a five bay expansion of the CCWF Building 600, the Fire Control Center addition to Building 600, re-roofing Building 600, Pump House Building 600A expansion, pre-fabricated Building 600C and miscellaneous Work in existing Central Chilled Water Facility (CCWF) Building 600.
   c. Structural Work, including but not limited to: foundations for the CCWF Building 600 expansion, Fire Control Center addition to Building 600, Pump House Building 600A expansion, Building 600C and outdoor electrical substation 600B. The concrete basin and stair tower for two cooling tower cells and three future cells. Structure for the CCWF Building 600 expansion and Fire Control Center addition and miscellaneous work in existing CCWF Building 600.
   d. Mechanical Work, including but not limited to: two chillers, secondary chilled water pumps, condenser water pumps and associated piping systems in CCWF Building 600 expansion; two primary chilled water pumps and associated piping systems in Pump House Building 600A expansion; two cooling tower cells and Sonoxide condenser water treatment system. Only the Sonoxide equipment will be provided by BNL. CCWF Building 600 expansion mechanical systems include HVAC, plumbing, steam and condensate, compressed air, domestic water, service water and fire protection. Building 600A expansion mechanical systems include heating, ventilation

and plumbing. WORK in existing CCWF Building 600 includes steam and condensate piping, domestic water, service water, fire protection and fire protection piping to the CCWF expansion and miscellaneous Work in existing CCWF Building 600.

e. Electrical work, including but not limited to: new motor control center(s), power distribution and lighting in CCWF Building 600 and Building 600A expansions and cooling tower. Expansion of outdoor substation 600B, power and lighting for Sonoxide System Building 600C and site lighting. Miscellaneous work in existing CCWF Building 600;

f. Instrument and Control Work, including but not limited to: providing, installing, and configuring Control System components to extend the existing Control System, and providing, installing, calibrating, and commissioning all new instruments, controls, and control panels, as required for the proper operation of the Chilled Water System in the CCWF Building 600 expansion, Primary Pumphouse Building 600A expansion and cooling tower system. PLC and HMI programming and software commissioning is by others.

g. Drainage and disposal of any chilled water or condenser water contained in the existing piping systems shall be as directed by BNL Site Environmental Office, and shall not cause detrimental erosion or other damage.

4. Alternates

a. Alternate No. 1, Instrument Air Compressor and Desiccant Air Dryer system: includes compressor, dryer, after filters, compressed air receiver tank, interconnecting piping, chilled water supply and return piping, back-up service water supply piping, cooling water circulating pump and associated valves, instrumentation and control and compressed air piping to the compressed air distribution header in the CCWF Building 600 expansion. Compressor is specified in Section 15215 and Dryer and Afterfilter in Section 15212.

b. Alternate No. 2, Chiller Condenser Tube Brush Cleaning System: includes the 4-way condenser water flow reversing valves, pneumatic control system, and tube cleaning brushes and baskets as specified in Section 15120.

c. Alternate No. 3, Two (2) Wonderware InTouch 9.5 HMI stations: includes personal computers, 60k InTouch runtime license, configuration and programming, as specified in Section 13855, Section 13865 and Section 13875. Refer to drawing M-622 for Control System architecture.

1.2 WORK BY OTHERS

A. Other contracts will be let and run concurrently and shall interface with the Contract. The Bidder and the Contractor are responsible for the proper assessment of the information which has a bearing on the scope of work of this Contract and obtaining clarification where necessary.

B. BNL will provide the following:

1. Sonoxide condenser water treatment system equipment to be installed by the Contractor.
2. Main PLC Panel as shown on drawings M-630-1 through M-630-24 will be provided and installed by BNL, except as noted on the drawings. ControlNet and redundancy connections to the panel are by the Contractor.

C. The A/E firm, Giffels Inc., will provide the following:

1. HMI screen modifications and additions, and PLC and HMI programming, including loading, debugging and checkout of the control programs, subsequent to Contractor's completion of the Chilled Water System expansion and confirmation of control wiring continuity.

END OF SECTION

Revision History	
Date	**Rev. No.**
E	0
F	0
02-19-09	0

THIS PAGE INTENTIONALLY LEFT BLANK

SECTION 01027

APPLICATIONS FOR PAYMENT

A. General:

1. Coordinate the Schedule of Values and Applications for Payment with the Contractor's Construction Schedule, Submittal Schedule, and List of Subcontracts.

2. Schedule of Values:

   a. Coordinate preparation of the Schedule of Values (Section 00800) with preparation of the Contractor's Construction Schedule.

   b. Correlate line items in the Schedule of Values with other required administrative schedules and forms, including:

      1) Contractor's Construction Schedule.

      2) Application for Payment forms, including Continuation Sheets.

      3) List of subcontractors.

      4) List of products.

      5) List of principal suppliers and fabricators.

      6) Schedule of submittals.

   c. Submit the Schedule of Values within two (2) weeks of signed Contract. Applications for Payment cannot be processed without an approved Schedule of Values.

3. Format and Content:

   a. Use the Schedule of Values listing in Section 00800 to establish the format for the Schedule of Values submission.

   b. Include the following Project identification:

      1) Project name: CCWF Phase II Expansion

      2) Building No: 600

      3) Job number: 11705

      4) Contractor's name and address.

      5) Date of submittal.

   c. Arrange the Schedule of Values in tabular form to be used in the preparation of the Applications for Payment.

d. Provide a breakdown of the Contract Sum in sufficient detail to facilitate evaluation of Applications for Payment. Break down subcontract amounts into several line items, where appropriate. Round amounts to nearest whole dollar; the total shall equal the Contract Sum.

e. The cost of Construction Safety shall be separated out of the General and Supplementary Conditions, and listed separately.

f. Temporary facilities and items that are not direct cost of work-in-place may be shown as separate line items or distributed as general overhead expense.

g. MPO will review the Schedule of Values for an equitable distribution of value for work to be completed. Contractor shall revise and resubmit the Schedule of Values until accepted by MPO.

B. Applications for Payment:

1. Applications for Payment shall be consistent with previous applications and payments as certified by the Construction Inspection Supervisor and paid for by BNL.

2. Payment-Application Times:

a. Payment dates are indicated in the Agreement. The period covered by each application is the period indicated in the Agreement.

3. Payment-Application Forms:

a. Use BNL Form F 2685 and Tabulation Sheet F 2686 as the forms for Applications for Payment, attached to this Section.

4. Application Preparation:

a. Complete every entry, including notarization and execution by a person authorized to sign on behalf of the Contractor. MPO will return incomplete applications without action.

b. Entries shall match data on the Schedule of Values and the Contractor's Construction Schedule. Use updated schedules if revisions were made.

c. Include amounts of approved Change Orders and Construction Change Directives issued prior to the last day of the construction period covered by the application.

5. Transmittal:

a. Submit 3 executed original copies of each Application for Payment to Phil Gardner, Procurement and Property Management Division, Bldg. 134C.

b. Transmit each copy with a transmittal listing attachments and recording appropriate information related to the application.

C. Initial Application for Payment:

1. Administrative actions and submittals that must precede or coincide with submittal of the first Application for Payment incude the following:

   a. Approved Safety Plan.

   b. List of subcontractors.

   c. List of principal suppliers and fabricators.

   d. Schedule of Values.

   e. Contractor's Construction Schedule (preliminary if not final).

   f. Submittal Schedule (preliminary if not final).

   g. List of Contractor's staff assignments.

   h. Certificates of insurance and insurance policies.

   i. Performance and payment bonds.

D. Application for Payment at Substantial Completion:

1. Following issuance of the Certificate of Substantial Completion, submit an Application for Payment. This application shall reflect Certificates of Partial Substantial Completion issued previously for BNL occupancy of designated portions of the Work.

   a. Administrative actions and submittals that shall precede or coincide with this application include the following:

      1) Warranties and maintenance agreements.

      2) Test/adjust/balance records.

      3) Recycled materials reports.

      4) Preventative maintenance program data.

      5) Operation and maintenance data.

      6) Changeover information related to BNL's occupancy.

      7) As-built record documentation.

      8) Certifications of specification compliance.

      9) Final cleaning.

E. Final Payment Application:

1. Administrative actions and submittals that must precede or coincide with submittal of the final Application for Payment include the following:

   a. Completion of Project closeout requirements.

   b. Completion of items specified for completion after Substantial Completion.

   c. Transmittal of Project construction records to MPO.

   d. Removal of temporary facilities and services.

   e. Removal of construction cores from door locks for BNL changeover.

END OF SECTION 01027

APPLICATION FOR PAYMENT

TO:

FROM (CONTRACTOR):

BLDG. NO: _____

JOB NO: _____

CONTRACT NO: _____

PROJECT NAME: _____

PAYMENT NO: _____

DATE: _____

PERIOD TO: _____

CHANGE ORDER SUMMARY			
NUMBER	DATE APPROVED	ADDITIONS	DEDUCTIONS
	TOTALS		
NET CHANGE BY CHANGE ORDERS			

THIS CONTRACTOR CERTIFIES THAT TO THE BEST OF HIS KNOWLEDGE AND INFORMATION THE WORK COVERED BY THIS APPLICATION HAS BEEN COMPLETED IN ACCORDANCE WITH THE CONTRACT DOCUMENTS, THAT ALL AMOUNTS HAVE BEEN PAID BY THE CONTRACTOR FOR WORK FOR WHICH PREVIOUS PAYMENTS WERE ISSUED, AND THE CURRENT PAYMENT SHOWN IS NOW DUE.

1. INITIAL CONTRACT AMOUNT ..... $ _____
2. APPROVED CHANGE ORDERS AMOUNT ..... $ _____
3. CONTRACT AMOUNT TO DATE..... $ _____
4. TOTAL VALUE OF WORK COMPLETED TO DATE..... $ _____
5. RETAINAGE _____% (OF COMPLETED WORK) ..... $ _____
6. SUB-TOTAL: (LINE 4 MINUS 5) ..... $ _____
7. LESS PREVIOUS PAYMENTS..... $ _____
8. CURRENT PAYMENT DUE..... $ _____
9. BALANCE TO FINISH, PLUS RETAINAGE (LINE 3 MINUS 6)..... $ _____

CONTRACTOR:

BY: _____ DATE: _____

BNL USE ONLY

_____
Contract Specialist

_____
Supervising Engineer

_____
Field Inspector

FINAL PAYMENT YES ___ NO ___

APPROVED FOR PAYMENT

_____
Authorized Signature

ACCOUNT _____

THIS PAGE INTENTIONALLY LEFT BLANK

TABULATION SHEET PAGE _____ OF _____

BLDG. NO: _____ PAYMENT NO: _____

JOB NO: _____ DATE: _____

CONTRACT NO: _____ PERIOD TO: _____

PROJECT NAME: _____

ITEM NO. **A**	DESCRIPTION OF WORK **B**	SCHEDULED VALUE **C**	WORK COMPLETED			TOTAL COMPLETED TO DATE **F**	% **(F ÷ C)**	BALANCE TO FINISH **(C – F)**
			PREVIOUS APPLICATION **D**	THIS APPLICATION **E**	% **(E ÷ C)**			
	TOTAL THIS SHEET							

Revision History	
Date	**Rev. No.**
02-19-09	0

SECTION 01035

MODIFICATION PROCEDURES

A. General:

1. This section specifies administrative and procedural requirements for handling and processing Contract modifications, and is supplemental to the terms and conditions of Attachment A, General Terms and Conditions for Construction and Labor Hour Contracts, latest edition, to the Construction Contract.

B. Minor Changes in the Work:

1. Supplemental instructions authorizing minor changes in the Work, if, in the opinion of BNL, do not involve adjustment to Contract Sum or Schedule, may be issued from time to time by MPO representatives, through the Field Change Request (FCR) Procedure.

2. If, in the opinion of the Contractor, after review of the supplemental instructions, an adjustment is involved, the terms of Article 22, Changes, of Attachment A shall govern.

C. Change Order Proposal Requests:

1. Proposal requests that require adjustment to the Contract Sum or Schedule if accepted, will be issued by BNL through the FCR Procedure or the Engineering Change Notice (ECN) Procedure. A detailed description of the proposed change and supplemental or revised Drawings and Specification will be included. Proposal requests are for information only and shall not be considered as instruction to stop work in progress, or to execute the change, unless the FCR or ECN states so specifically.

a. Unless otherwise indicated, within ten (10) days of receipt, submit an estimate of cost to execute the change.

1) Include a list of quantities of products to be purchased and unit costs, along with the cost of purchases to be made. If requested, furnish survey data to substantiate quantities.

2) Indicate applicable delivery charges, equipment rental, and amounts of trade discounts.

3) Include a statement indicating the effect the proposed change in the Work will have on the Contract Schedule.

D. Contractor Initiated Change Order Proposal Requests:

1. When unforeseen conditions require modifications to the Contract, the Contractor may propose changes by submitting a request to BNL.

   a. Include a statement outlining reasons for the change. Provide a complete description of the change. Indicate effect of the proposed change on the Contract Sum and Schedule.

   b. Include a list of quantities of products to be purchased and unit costs, along with amount of purchases to be made. If requested, furnish survey data to substantiate quantities.

   c. Indicate applicable delivery charges, equipment rental, and amounts of trade discounts.

   d. Comply with requirements in Section 01630 "Product Substitutions" if the change requires substitution of one product or system for product or system specified.

E. Construction Change Directive:

1. When BNL and Contractor are not in agreement on terms of a Change Order Proposal Request, BNL may issue Construction Change Directive instructing the Contractor to proceed with a change, for subsequent inclusion in a Change Order, to be negotiated between both parties at a future date.

   a. Construction Change Directive will contain a complete description of the change and designate method to be followed to determine change in the Contract Sum or Schedule.

   b. Maintain detailed records of man hours utilized and materials provided for work required by the Construction Change Directive.

   c. After completion of the change submit an itemized account and supporting data necessary to substantiate cost and time adjustments to the Contract.

   d. Upon receipt of this detailed documentation, the data will be reviewed, the final cost negotiated and a formal change to the contract issued as specified below.

F. Change Order Procedures:

1. Upon BNL's approval of a Change Order Proposal Request, BNL will issue a Change Order for signatures of BNL and Contractor, as provided in the Conditions of the Contract.

END OF SECTION 01035

Revision History	
Date	**Rev. No.**
02-19-09	0

SECTION 01102

ALTERATION PROCEDURES

PART 1 GENERAL

1.1 SUMMARY

A. Description
   1. Perform all alteration and removal work, including the alteration and removal work incidental to that shown or specified, to complete the alteration and removal work as shown on the DRAWINGS or specified in this SECTION.
   2. The Work of this SECTION is the responsibility of the Building Work Contractor.
   3. Work in close coordination with the other Contractors on the Project to accomplish the alterations for the whole Project.
   4. In addition to WORK shown:
      a. Modify existing construction that interferes with new construction, to the extent of the interference.
      b. Cut and later patch all holes and openings in existing construction necessary for connection of building work; for the passage or connection of structural members; and for the building alterations in connection with mechanical and electrical work.
      c. Properly repair all surfaces left in place and scheduled to be exposed, that have been damaged due to alterations, and damaged surfaces previously concealed that will be left exposed due to alterations, even though such damage was not caused by work of this CONTRACT.
   5. Be responsible for a complete job, whether done as work under this SECTION or assigned to the particular trades involved.
   6. Make proper and approved connections of new work to existing construction and necessary adjustments of either, or both, to produce a complete and finished project. Patching and new work shall match existing construction, including finishes, painting, unless otherwise shown, or specified, and shall comply with applicable requirements of individual technical Sections of Specifications.
   7. To the greatest extent possible removed materials shall be recycled or reused on site to avoid land fill disposal and to meet the intent of LEED NC 2.2, MR Credits 2.1 and 2.2, Construction Waste Management.

B. Occupancy and Use Of Existing Facilities
   1. The OWNER will occupy and use the facilities adjacent to the areas of Work during the entire construction period. Plan and coordinate activities with the OWNER in order to provide all necessary controls for the abatement of dust, noise, and inconvenience to OWNER’S personnel during all phases of the Work. Do not shut down any services or block off any areas without prior approval of the OWNER.
   2. The OWNER will vacate the existing areas requiring work, to conform with the schedule of work and sequence of construction and will remove all portable items of furniture, equipment and fixtures prior to the start of the work.

3. Coordinate limits the work area required with OWNER to accomplish WORK before OWNER starts vacating areas.

C. Scheduling the Work

1. The work shall be mutually scheduled by the Architectural, Mechanical and Electrical Contractors, and the OWNER to fit the WORK of the separate contracts and of the OWNER'S operations, and to facilitate completion of the WORK.
2. The work may be scheduled during the entire 24 hours of any weekday, provided no laws are violated and that the operations are so conducted as not to create a public nuisance or to disturb the peace. If the WORK is stopped by public authority due to such nuisance, disturbance or law violation, do whatever is necessary to maintain the schedule.
3. Work that will interfere with the OWNER'S operations or use of his facilities, including the shutting down of mechanical and electrical services, shall be scheduled, with the approval of the OWNER, so as to cause a minimum amount of interruption. The scheduling shall consider both the times, the types, and the areas or places of such interferences, and shall include routes and times of ingress and egress of workmen and materials.
4. When existing building is occupied, maintain free, clear, unobstructed, safe egress through existing exits and through and safely beyond new construction as required by state and local fire safety codes.
5. Provide adequate and proper protection, including heat, to the existing buildings and premises occupied by the OWNER during the execution and completion of the Work in such manner that the OWNER'S operations may be carried on without interference, interruption or inconvenience at all times during the construction operations.
6. Phasing Sequence:
   a. Because of the problems inherent in remodeling the building under conditions of full operation, there must be a high degree of cooperation between all parties involved in the planning and construction process. Consequently, the Work - alteration, removal and new construction - must be planned and executed carefully. Each phased work area shall be complete and cleaned before advancing to the next phasing area.
   b. Consult and coordinate the work with the other contractors and with the Phasing Plan. A schedule of the work shall be presented to the OWNER for review before starting the work. The work schedule shall be laid out in bar chart form.
   c. The CONTRACT work schedule shall be based on a normal work week. Should the CONTRACT work fail to progress according to the schedule and if, in the opinion of the ARCHITECT-ENGINEER the Work cannot be completed within the CONTRACT TIME or such extensions thereof as may have been granted, work such additional time over the normal work week, including Saturdays, Sundays, and holidays as required to meet the scheduled time for completion, without additional cost to the OWNER.
   d. OWNER'S operations outside of specific phased areas in which work is being performed, must be maintained to insure normal operations in such major phased areas. If certain work is required within a work area, and cannot be accomplished so as to maintain the function of operations outside such area, such work when directed by the ARCHITECT-ENGINEER shall be performed on a premium time basis after hours of normal use by such normal operation. Premium time work will be considered

as CHANGES IN THE WORK and will be paid for per the CONTRACT DOCUMENTS.

e. Clean areas to be put back into service during the phasing sequences. All work must be scheduled. Notify the OWNER 72 hours in advance of when an area is needed to work in that is in use by the OWNER so the OWNER can vacate the area and remove portable equipment, material and furniture.

D. Survey

1. Prior to submitting shop drawings or beginning shop fabrication or field construction of Work in connection with the alterations, survey existing construction including structure, finish and equipment adjacent to construction to be removed. Be responsible for the accurate tie-in of the new work to the existing construction.

E. Conduct Of Operations

1. Conduct operations in such manner as to create a minimum of noise, dust, and other disturbance.
2. Do not allow removed materials, rubbish and debris to accumulate. Keep the construction areas and all public and private property used in connection with the WORK in a neat orderly condition.
   a. Plan and coordinate activities with the OWNER in order to provide all necessary controls for the abatement of dust, noise, and inconvenience to OWNER'S personnel and operations during all phases of the work. Do not shut down or block off any areas without prior approval of the OWNER.
   b. Do not interrupt existing utilities except as specified or when approved in writing by the OWNER, and then only after temporary utility services have been provided by the CONTRACTOR and approved by the OWNER.
   c. Conduct alterations and debris removal in such a manner as to insure minimum interference with streets, walks, passageways and other facilities occupied by the OWNER; such facilities shall not be closed off to traffic or in any way obstructed without prior written permission.
3. At the completion of the Work, remove all temporary enclosures and protective devices and leave the premises clean.
4. Methods shall be such as to assure safe working conditions in accordance with applicable safety laws; to prevent collapse of any section; and to prevent damage to facilities indicated to remain in place and to new construction.

F. Fire Protection

1. Perform thermal and flame-cutting operations per the hazards precaution requirements of the CONTRACT DOCUMENTS.
2. If cutting torches are used, take all precautions necessary to prevent setting of fires, including use of fireproof tarpaulins and maintenance of fire extinguishing apparatus adjacent to cutting area. Also, obtain daily permit from OWNER'S Plant Protection Department for using cutting torches, prior to their use.

G. Removed Materials

1. Removed materials not indicated for turning over to the OWNER or indicated for reuse, as well as rubble and debris resulting from such operations, shall become the property of the CONTRACTOR and shall be removed daily from the PROJECT site and legally disposed of off the PROJECT site.
2. In removing salvageable items that are scheduled or specified for reuse or that are to be turned over to the OWNER, exercise care in removing such items so as not to damage them.
3. If the construction schedule does not allow immediate reinstallation of removed items to be reused, provide adequate storage facilities for such items in storage area designated by OWNER, transport such items to the storage area, store them, and protect them from damage during storage.
4. When the construction schedule calls for installation of stored items to be reused, remove such items from storage, transport them to location(s) of installation, install them, and clean up storage area.

H. Support Of Existing Structure

1. Prior to removing existing construction, provide temporary sheeting, underpinning, shoring and bracing to carry the loads and stresses withstood in place by the items to be removed.
2. Such temporary construction shall be placed so as not to block fire exitways of the existing building, so as not to interfere with OWNER'S operations, and so as to allow space for performing the required alterations.
3. Be responsible for the adequacy of temporary support of structure, as well as for damage to the existing building and contents thereof resulting from inadequate sheeting, underpinning, shoring and bracing.

I. Temporary Partitions And Closures

1. Provide weathertight partitions or closures at exterior openings to isolate the areas from the rest of the building and to protect the building from the elements where alteration operations would expose the interior to the elements.
   a. Provide weatherproof partitions of wood framing and plywood sheathing (tape joints and paint wood with exterior type paint) where shown or directed, acceptable to the OWNER; provide access doors as required, complete with hardware, lockable where required for OWNER'S security.
   b. NOTE: Existing exterior walls to be removed may be left in place (where noted approved) to serve as separation walls during construction, and then be removed when approved or directed by the ARCHITECT-ENGINEER and OWNER.
2. Provide dust-tight partitions around interior areas to isolate the areas from the rest of the building where alteration operations would create dust conditions, including dust-tight closures below supported floor slabs when making new openings therein and weathertight closures over roof decks when making new openings therein.
   a. Where OWNER'S operations, personnel and equipment are subject to flying dust, debris, etc. from removal or construction operations, provide heavy duty vinyl sheet secured to ceiling and floor construction in manner acceptable to the OWNER; where required to permit passage of materials and personnel, sheets shall be overlapped a minimum of three feet.

3. To prevent as much as possible the spread of dust and noise during this work, the following procedures must be followed.
    a. Where drilling, coring, cutting or other dust-producing operations are contemplated, equip all such equipment with vacuum pick-up devices to hold free dust production to a minimum.
    b. Where operations are contemplated that will produce noise, clear such operations with the OWNER prior to commencement of such work or provide sound barriers or other noise suppressants to reduce or eliminate air-borne noises.
4. Place temporary partitions so as to provide adequate space to carry on the alteration operations but so as not to interfere with OWNER'S operations, and so as not to encroach on fire exitways of the existing building. Place partitions where shown on DRAWINGS and, if not shown, where approved by the OWNER.
5. Temporary partitions shall be of flame-resistant construction. Submit proposed method of partition construction for approval.
6. Openings made in exterior walls and roof shall be closed the same day that they are opened, either by permanent construction or with vandalproof, weatherproof, dust-tight temporary closures. No openings in exterior walls or roof shall be allowed to remain open; security of the building must be maintained at all times.

J. Protections
1. Provide, and later remove, temporary barriers, warning signs, blinker lights, and other safety measures, as required for the protection of personnel, both OWNER'S and CONTRACTOR'S, and the public per the CONTRACT DOCUMENTS.
2. Adjacent Structures: During the alteration operations, protect from damage, adjacent buildings, pavements and surfaces which are to remain. If adjacent structures are damaged, repair such structures at no cost to the OWNER.
3. Roof: Prior to starting work or allowing traffic on the existing decking, provide approved temporary 3/4 inch thick plywood protection on the existing built-up roofing system during operations on the roof. Be responsible for repairing damage that occurs to the existing built-up roofing system due to CONTRACT operations.
4. Face of Building: Methods for transporting materials between ground and roof and for removing trash, rubbish and debris shall be safe methods which will not damage exterior face of building, endanger persons or damage property.
5. Utilities: Protect existing utilities and services, as well as OWNER'S service systems, within and adjacent to the alteration operations, from damage on account of such operations. If utilities or services are uncovered that are not shown on the DRAWINGS, advise the ARCHITECT-ENGINEER and the OWNER and do not work in the immediate areas until instructed to do so.
6. Disconnect, cap and abandon existing utilities and services exposed as a result of the alteration operations that are not required to remain in use; remove existing services as part of the demolition where so indicated or required; relocate existing services where so indicated or required.
7. Protect the finished floors which are to remain, and over which materials or equipment shall be moved, to preserve the condition of the existing floor. Use not less than 1/4 inch thick plywood or flakeboard laid over heavy duty kraft or red rosin paper with joints lapped.

8. Floor slabs that are to remain which materials or equipment shall be moved across shall be protected to preserve the condition of existing floor. CONTRACTOR is required to survey the existing floor and report all defects (cracks, stains, spalls, etc.) prior to moving on the floor. CONTRACTOR is responsible for damage beyond that which was reported and will be held accountable for all repair work required, including total slab replacement.
9. Whenever materials or equipment need to be lifted over or near an existing, occupied building, give advance notice and arrange with the OWNER to have any potentially endangered spaces vacated. No such lifting shall be done without the permission of the OWNER.

PART 2 PRODUCTS – (NOT USED)

PART 3 EXECUTION

3.1 GENERAL

A. Make proper and approved connections of new Work to existing construction and all necessary adjustments of either or both as required to produce a complete and finished job. Patching and new Work shall match existing construction, unless otherwise shown or specified, and shall comply with the applicable requirements of the individual technical SECTIONS of the SPECIFICATIONS.

3.2 SALVAGEABLE MATERIALS AND EQUIPMENT

A. Remove all salvageable materials and equipment to cause the least possible damage thereto. Handle, store and protect all removed items which are to be reused in the Work, or are to be retained as OWNER'S property.

B. Provide identification tags on all items boxed or placed in containers. Indicate thereon the type, size and quantity of materials.

3.3 WORKMANSHIP

A. Concrete
1. When cutting concrete, blade-cut 1-1/2 inches deep (unless other depth is noted) at the surface to achieve straightline edges and leave edges square and without taper or slope. Break out concrete in easily handled volumes and dispose of as directed or specified.
2. Where required, leave sufficient reinforcing in place to bond to new work; otherwise, cut off flush with face of concrete.

B. Masonry
1. When joining new to existing masonry, unless otherwise directed, remove masonry unit from each alternating course so as to toothbond the WORK.

C. Built-Up Bituminous Roofing System
   1. Carefully remove existing, built-up roofing system and insulation, if the system includes insulation, as required for new construction and for new openings and penetrations in existing roof where shown.
   2. Immediately upon removal of a section of existing roofing system, install temporary water cut-offs in such a manner that rain water and condensation cannot enter the existing built-up roofing remaining in place.
   3. Install new single ply membrane roofing system over exposed existing roof structure and new roof structure.

D. Miscellaneous Metals
   1. Remove shop-fabricated items as whole units, such as access doors and frames, steel gratings, metal ladders, wire mesh partitions, metal railings, and similar items. Light gage metal items, such as metal gutters, roofing and siding, and similar items shall be salvaged, unless designated as scrap metal.

E. Carpentry
   1. Gypsum board, fireboard, and other composition sheathing boards shall be classified as debris.
   2. Bolts, nuts, washers and other rough hardware shall be classified as debris.

F. Mechanical Equipment and Fixtures
   1. Disconnect mechanical work to be removed at the nearest convenient connection to existing services which are to remain.
   2. Salvage each item of equipment and fixtures as a unit; tag and store as directed. Salvage each unit with its normal operating equipment.
   3. Do not remove equipment until approved by the OWNER.
   4. Disconnect the mechanical equipment and fixtures at fittings. Remove service valves and attach them to the unit.
   5. Remove all water, dirt, dust, and foreign matter from units. Drain all tanks, piping, and fixtures and steam clean interiors if previously used to store flammable, explosive, or other dangerous liquids. Seal all openings with caps, plates, or plugs, as approved.
   6. Motors attached by flexible connections shall be secured to the unit.
   7. Charge the lubricating system with the proper oil or grease, as directed.
   8. Disconnect piping at unions, flanges, and valves, and at fittings as required to reduce the pipe into straight lengths for practicable storage. Pile salvaged piping according to size and type, as directed. Piping which previously contained gas, gasoline, oil, or other dangerous fluids shall be carefully dismantled, with precautions taken to prevent injury to persons and property. Store such piping outdoors until all fumes or danger of injury are removed. Box prefabricated supports, hangers, plates, valves, and specialty items according to size and type. Sprinkler heads shall be individually wrapped in plastic bags before boxing. Piping not designated for salvage, or damaged in removal, shall be considered as scrap metal.
   9. All removed duct work shall be classified as scrap metal.
   10. Remove and salvage all fixtures associated with plumbing, heating, air-conditioning, refrigeration, and other mechanical system installations. Tag fixture units for

identification; store, and protect from damage. Broken, damaged, or otherwise unserviceable units, shall be classified as debris.

11. Remove and salvage all motors and machinery items associated with the plumbing, heating, air-conditioning, refrigeration, and other mechanical system installations. Salvage, box and store the auxiliary units and accessories with the main unit. Tag such items for identification; store, and protect from damage.
12. Verify all existing work. Where existing connections are partial or require modification in order to match or connect Work under this CONTRACT, provide all necessary materials, labor and equipment required to modify the existing work. In addition, maintain integrity of the existing systems. Rectify any contamination, degradation of cleanliness or damage to the existing systems.
13. Refer to 15000 Series SECTIONS of the SPECIFICATIONS for specific directions regarding particular systems.

G. Electrical Equipment and Fixtures

1. Salvage motors, motor controllers, and operating and control equipment and attach to the driven equipment. Salvage wiring systems and components. Box all loose items and tag for identification. Disconnect all primary, secondary, control, communication and signal circuits at the point of attachment to their distribution system.
2. Remove and salvage all electrical fixtures. Remove unprotected glassware from the fixture and salvage separately. Salvage, box and tag lamps and protect from breakage.
3. Remove and salvage all switches, receptacles, switchgear, transformers, regulators, instruments, plates, circuit breakers, panelboards, outlet boxes and similar items. Box and tag for identification according to type and size.
4. Remove and salvage all conductors, including insulated wire, non-metallic sheathed and flexible armored cable. Conductors less than 10 feet in length shall have the insulation removed and stock-piled as scrap metal.
5. Salvage all conduit except where embedded in concrete or masonry. Corroded, bent or damaged conduit shall be stock-piled as scrap metal. Straight, undamaged lengths shall be sorted and stock-piled according to size and type.
6. Remove and salvage all wiring ducts or troughs. Plug-in ducts and wiring troughs shall be disassembled into unit lengths. Remove plug-in or disconnecting devices from the busway, and store separately.
7. Refer to 16000 Series SECTIONS of the SPECIFICATIONS for specific directions regarding particular systems.

H. Access To Disconnect Work

1. Access to areas of work within the existing building, such as for disconnecting and reconnecting mechanical or electrical services that are remote from the actual work area, shall be through the service entrances or the areaway adjacent to such actual work area.

3.4 PRELIMINARY WORK

A. The OWNER will disconnect and seal the utilities serving each area of alterations or removal prior to the start of the work.

B. Utilities serving each area of alterations or removal will be shut-off by the OWNER. The CONTRACTOR shall disconnect and seal as required, prior to the start of the work.

C. Shut off utilities serving each area of alterations or removal as approved by the OWNER. Disconnect and seal as required, prior to the start of the work. In order for the OWNER to have use of such utilities as long as possible, such disconnection in certain areas may need to be done during weekends or other nonregular times.

3.5 MAJOR WORK ITEMS

A. No attempt has been made to enumerate or describe in detail Scope on the Drawings or herein, each and every alteration and removal work item required as part of the work of this Contract, but only to identify the principal items required. Alteration and removal work includes, but is not limited to, the following work:

1. Modify existing building construction as required for connection and construction of the new work, and related components.
2. Provide new openings in existing construction and block up existing openings as required.
3. Modify existing parapets and roofs required to receive new construction, adjoining new roof, roofing, expansion joints and flashings. Provide new roof openings as required.
4. At existing roof areas specifically noted to be re-roofed, remove existing roofing and insulation down to deck. Install new roof insulation and roofing system as specified.
5. Saw-cut and remove existing concrete floor slabs where noted and as required for new underground services, foundations, etc. Replace removed and damaged portions of concrete slabs that are to remain.
6. Remove existing items such as, railroad rails and ties, fencing, ramps, stairs, railings, guard posts, etc., as required.
7. Salvage and reuse or relocate existing items as specified.
8. Patch holes, openings and damaged areas in floors, walls, ceilings, and roof left by removal of existing, or installation of new piping, ducts, conduits, grilles, diffusers, light fixtures, equipment and other items. Use materials and methods to match the existing surfaces for such patching work.
9. Existing conditions, including Mechanical and Electrical services, which interfere with the installation of the new required work shall be removed by the CONTRACTOR to allow the new construction and then replaced or relocated at the direction of the OWNER, at no additional cost to the OWNER.

3.6 ALTERATIONS

A. General

1. Cut, patch, repair, and perform other alterations using mechanics skilled in the particular trade of work required. Where required to patch or extend existing construction, or both, match the existing exposed surface materials in finish, color, texture, and patterns.

B. Cleaning

1. Clean the existing surfaces that are to remain in the areas of work of this CONTRACT. Clean partitions after all work is done in the area.

C. Repairing

1. Repair all damage caused by work of this CONTRACT, at no additional cost to the OWNER.

END OF SECTION

Revision History	
Date	**Rev. No.**
02-19-09	0

DO/djo
P:__PROJECTS_SF07\sf070003.0001nsls ii ccwf expansion\SPC\01102.doc

SECTION 01230

ALTERNATES

A. General:

1. This Section includes administrative and procedural requirements for Alternates.

B. Definitions:

1. Alternate: An amount proposed by bidders and stated on the Bid Form for certain work and/or item defined in the Bidding Requirements that may be added to or deducted from the Base Bid amount if BNL decides to accept a corresponding change either in the amount of construction to be completed or in the products, materials, equipment, systems, or installation methods described in the Contract Documents.

   a. The cost or credit for each Alternate is the net addition to or deduction from the Contract Sum to incorporate Alternate into the Work. No other adjustments are made to the Contract Sum.

C. Procedures:

1. Coordination: Modify or adjust affected adjacent work as necessary to completely integrate work of the Alternate into Project.

   a. Include as part of each Alternate, miscellaneous devices, accessory objects, and similar items incidental to or required for a complete installation whether or not indicated as part of the Alternate.

2. Description of all workmanship and materials in the Specifications and Drawings shall have the same meaning and force when applied to similar workmanship and materials in the Alternates.

3. Notification: Immediately following award of the Contract, notify each party involved, in writing, of the status of each Alternate. Indicate if Alternates have been accepted, rejected, or deferred for later consideration. Include a complete description of negotiated modifications to each of the Alternates.

4. Execute accepted Alternates under the same conditions as other work of the Contract.

5. Schedule: A schedule of Alternates is included below. The appropriate sections of the Specifications contain requirements for materials and methods necessary to achieve the work described under each Alternate.

D. Schedule of Alternates:

1. See Section 01010 Summary of Work.

END OF SECTION

Revision History	
Date	**Rev. No.**
F	0
02-19-09	0

SECTION 01300

SUBMITTALS

A. General:

1. Extent:

a. This Section includes administrative and procedural requirements for submittals required for performance of the Work, including the following:

1) Contractor's Construction Schedule.

2) Submittal Schedule.

3) Coordination Drawings.

4) Daily Construction Reports.

5) Shop Drawings.

6) Product Data.

7) Samples.

8) Quality Assurance Submittals.

2. Administrative Submittals:

a. Refer to other Division 1 Sections and other Contract Documents for requirements for administrative submittals. Such submittals include, but are not limited to, the following:

1) Schedule of Values.

2) Applications for Payment.

3) Performance and Payment Bonds.

4) Insurance Certificates.

5) List of Subcontractors with Completed ISM Flowdown Forms.

6) Construction Safety Plan.

7) Occupational Medicine Program.

8) Rigging Plans.

9) Product List.

10) Recycled Materials Reports.

11) Certification of Specification Compliance.

12) Preventative Maintenance Program Data.

13) Operation and Maintenance Data.

14) LEED Requirements.

B. Definitions:

1. Shop Drawings and Manufacturer's Data include installation drawings, setting diagrams, layouts, schematics, descriptive literature, illustrations, schedules, performance and test data, similar materials and samples furnished by Contractor to explain and show in detail, specific portions of work required by Contract.

2. Coordination Drawings show the relationship and integration of different construction elements that require careful coordination during fabrication or installation to fit in the space provided or to function as intended.

3. Samples are full-size physical examples submitted or erected on-site to illustrate finishes, coatings, or finish materials. Field samples are used to establish the standard by which the Work will be judged.

C. Submittal Procedures:

1. Coordination:

a. Coordinate preparation and processing of submittals with performance of construction activities. Transmit each submittal sufficiently in advance of performance of related construction activities to avoid delay.

b. Submittals to MPO by Contractor, or through the Contractor from subcontractor, or any low tier subcontractor, pursuant to a construction contract, shall show in detail (i) the proposed fabrication and assembly of structural elements and (ii) the installation (i.e., layout, form, fit, setting, and attachment details) of materials or equipment.

c. Coordinate each submittal with fabrication, purchasing, testing, delivery, other submittals, and related activities that require sequential activity.

d. Coordinate transmittal of different types of submittals for related elements of the Work so processing will not be delayed by the need to review submittals concurrently for coordination.

1) MPO reserves the right to withhold action on a submittal requiring coordination with other submittals until all related submittals are received.

e. These contract conditions shall be included in all subcontracts hereunder at any tier.

2. Processing:

   a. Before submitting any data for approval, the Contractor shall coordinate all such drawings and data, and check them for accuracy, completeness, and compliance with Contract requirements. The Contractor shall see that all work contiguous with and having bearing on the work indicated on drawings is accurately and distinctly illustrated and that work shown is in conformity with contract requirements.

   b. The Contractor shall indicate his approval on all submittals as evidence of the above coordination and review. Shop drawings and data submitted to BNL without evidence of Contractor's approval, may be returned for resubmission. Contractor's received stamp is not considered as approval.

   c. To avoid the need to delay installation as a result of the time required to process submittals, allow sufficient time for submittal review, including time for resubmittals.

      1) Allow 15 working days for review. Allow additional time if MPO must delay processing to permit coordination with subsequent submittals.

      2) If resubmittal is necessary, process the same as the initial submittal.

      3) Allow 10 working days for reprocessing each submittal.

      4) No extension of Contract Time will be authorized because of failure to transmit submittals to MPO sufficiently in advance of the Work to permit processing.

   d. The General Conditions portion of the Contractor's monthly payment requisitions may be reduced if required Shop Drawings, Manufacturers Data, Samples and any other required submissions are not received, or until they are received in a timely manner.

3. Submittal Preparation:

   a. Place a permanent label or title block on each submittal for identification. Indicate the name of the entity that prepared each submittal on the label or title block.

      1) Provide a space approximately 4 by 5 inches (100 by 125 mm) on the label or beside the title block on Shop Drawings to record the Contractor's review and approval markings and the action taken.

   b. Include the following information on the label for processing and recording action taken.

      1) Project Name and Building Number.

      2) BNL Job Number.

      3) Date and Specification Section Reference.

      4) Name and address of the Contractor, subcontractor, supplier and manufacturer.

4. Submittal Transmittal:

a. Package each submittal appropriately for transmittal and handling. Transmit each submittal from the Contractor to MPO using a transmittal form. MPO will not accept submittals received from sources other than the Contractor.

b. On the transmittal, record relevant information and requests for data. On the form, or separate sheet, record deviations from Contract Document requirements, including variations and limitations. Attach Contractor's Certification of Specification Compliance forms stating that information complies with Contract Document requirements.

1) Transmittal Form: Use Giffels Standard Transmittal forms.

2) Submit only one Spec. Section per Transmittal.

c. Send four (4) copies of each submission to each of the following addresses:

Brookhaven National Laboratory	Giffels Inc.
Alan Raphael	Bill Harrison
Building 134-C, Box 5000	25200 Telegraph Road, Suite 200
Upton, New York 11973	Southfield, MI 48033

d. Mark all transmittal forms as follows:

JOB TITLE: CCWF Phase II Expansion
JOB NO. 11705, BLDG. NO. 600
SPEC. SECTION: _____, DATE: _____
SUBMITTAL NO: _____
SUBCONTRACTOR SUPPLIER: _____

D. Contractor's Construction Schedule:

1. Gantt-Chart Schedule:

a. Prepare a fully developed, horizontal Gantt-chart construction schedule using a scheduling software program. Submit within three (3) weeks after the date of the signed Contract.

1) Provide a separate time bar for each significant construction activity. Provide a continuous vertical line to identify the first working day of each week. Use the same breakdown of units of the Work as indicated in the "Schedule of Values."

2) Prepare the schedule on a sheet, or series of sheets, of sufficient width to show data for the entire construction period. Minimum size shall be 24″ × 36″.

3) Secure time commitments for performing critical elements of the Work from parties involved. Coordinate each element on the schedule with other construction activities; include minor elements involved in the sequence of the Work. Show each

activity in proper sequence. Indicate graphically the sequences necessary for completion of related portions of the Work.

4) Coordinate the Contractor's Construction Schedule with the Schedule of Values, list of subcontracts, Submittal Schedule, progress reports, payment requests, and other schedules.

Indicate completion in advance of the date established for Substantial Completion. Indicate Substantial Completion on the schedule to allow time for the BNL procedures necessary for certification of Substantial Completion.

2. Phasing:

a. On the schedule, show utility shutdowns for connections to existing equipment. Minimize disruptions to the existing CCWP operations.

3. Work Stages:

a. Indicate important stages of construction for each major portion of the Work, including submittal review, testing, and installation.

4. Distribution:

a. Following any necessary revisions and subsequent approval by MPO of the initial submittal, print and distribute copies to MPO, subcontractors, and other parties required to comply with scheduled dates. Post copies in the temporary field office.

1) When revisions are made, distribute to the same parties and post in the same locations. Delete parties from distribution when they have completed their assigned portion of the Work and are no longer involved in construction activities.

5. Schedule Updating:

a. Revise the schedule after each meeting, event, or activity where revisions have been recognized or made. Issue the updated schedule concurrently with the report of each meeting.

E. Submittal Schedule:

1. After development and acceptance of the Contractor's Construction Schedule, prepare a complete schedule of submittals. Submit the schedule within 10 days of the date required for submittal of the Contractor's Construction Schedule.

a. Required Submissions:

Item	Shop Dwg.	Mfrs. Data	Samples	Other Data
* 1. Schedule of Values				X

		Item	Shop Dwg.	Mfrs. Data	Samples	Other Data
*	2.	List of Subcontractors with Completed ISM Flowdown Forms				X
*	3.	Construction Safety Plan				X
*	4.	Occupational Medicine Program				X
	5.	Construction Schedule				X
	6.	Rigging Plans				X
	7.	Submittal Schedule				X
	8.	Product List				X
	9.	Recycled Materials Reports				X
	10.	Certification of Specification Compliance				X
	11.	Preventative Maintenance Program Data				X
	12.	Operation and Maintenance Data				X
	13.	LEED Requirements				X
	14.	Storm Manholes	X	X		
	15.	Storm Drywells	X	X		
	16.	Sanitary Manholes	X	X		
	17.	Storm Grates & Castings	X	X		
	18.	Storm Piping	X	X		
	19.	Sanitary Piping	X	X		
	20.	Fire Protection Water Piping	X	X		
	21.	Cooling Tower Water Piping	X	X		
	22.	Temporary Fencing	X	X		
	23.	Asphaltic Concrete Pavement	X	X		
	24.	Grass Seed Mixture	X	X		
	25.	Concrete Design Mixes, materials and curing procedures	X	X		
	26.	Concrete Reinforcement	X	X		
	27.	Grout	X	X		
	28.	Masonry Materials	X	X		
	29.	Unit Masonry Assemblies	X	X		
	30.	Damp Proofing Material	X	X		
	31.	Structural Steel	X	X		
	32.	Steel Deck	X	X		
	33.	Cold Formed Metal Framing	X	X		
	34.	Metal Fabrications	X	X		

Item	Shop Dwg.	Mfrs. Data	Samples	Other Data
35. Monorail Data Sheets	X	X		
36. Metal Stairs	X	X		
37. Gratings and Floor Plates	X	X		
38. Pre-engineered Building Design Calculations and Drawings	X	X		
39. Railings	X	X		
40. Finish Carpentry	X	X		
41. Sheet Waterproofing	X	X	X	
42. Board and Batt Insulation	X	X		
43. Pre-Fabricated Metal Building	X	X		
44. Insulated Metal Wall Panels	X	X	X	
45. Membrane Roofing	X	X	X	
46. Sheet Metal Flashing and Trim	X	X		
47. Manufactured Roof Specialties	X	X		
48. Firestopping Materials	X	X		
49. Joint Sealers	X	X		
50. Doors and Windows	X	X		
51. Steel Doors and Frames	X	X		
52. Tile Materials	X	X	X	
53. Suspended Acoustical Ceilings	X	X	X	
54. Paints and Coatings	X	X		
55. Toilet Compartments & Hardware	X	X		
56. Solid Plastic Lockers and Benches	X	X		
57. Fire Extinguishers, Cabinets and Accessories	X	X		
58. Toilet and Bath Accessories	X	X		
59. Residential Equipment	X	X		
60. Pumps	X	X		
61. Chilled Water Piping	X	X		
62. Cooling Tower Water Piping	X	X		
63. Compressed Air Piping	X	X		
64. Steam Piping	X	X		
65. Condensate Piping	X	X		
66. Steam and Condensate Specialties & Equipment	X	X		

Item	Shop Dwg.	Mfrs. Data	Samples	Other Data
67. Centrifugal Chillers	X	X		
68. Chiller tube cleaning system	X	X		
69. Air Compressor, Filters, Dryer & appurtenances	X	X		
70. Controls	X	X		
71. Control Processor	X	X		
72. Fire Protection Piping & Appurtenances	X	X		
73. Plumbing Piping & Appurtenances	X	X		
74. Pipe Hangers and Supports	X	X		
75. Valves	X	X		
76. Tags, Charts and Identification	X	X	X	
77. Plumbing Fixtures	X	X		
78. HVAC Piping and Appurtenances	X	X		
79. Insulation for Mechanical Equipment	X	X		
80. Steam to Hot Water Converters	X	X		
81. Unit Heaters	X	X		
82. Air Handling Units	X	X		
83. Centrifugal Fans	X	X		
84. Metal Ductwork	X	X		
85. Ductwork Accessories	X	X		
86. Dampers	X	X		
87. Air Outlets and Inlets	X	X		
88. Thermostats and Gauges	X	X		
89. Balancing and Testing Reports	X	X		
90. Wire and Cable (600 Volts and Less)	X	X		
91. Raceways & Fittings	X	X		
92. Wiring & Control Devices	X	X		
93. Enclosed Switches	X	X		
94. Grounding and Bonding Materials	X	X		
95. Power Transformers	X	X		
96. Distribution Equipment	X	X		
97. Circuit Breakers and Fuses	X	X		
98. Motor Control Centers	X	X		
99. Adjustable Frequency Drives	X	X		

Item	Shop Dwg.	Mfrs. Data	Samples	Other Data
100. Motors	X	X		
101. Busways	X	X		
102. Medium Voltage Cable	X	X		
103. Load Center Unit Substation Double-Ended	X	X		
104. Medium Voltage Metal Cald Switchgear	X	X		
105. Medium Voltage Metal Enclosed Switchgear	X	X		
106. ARC Flash Mitigation System	X	X		
107. Lighting System	X	X		
108. Uninterruptible Power System Battery-Inverter, Auto-Bypass	X	X		
109. Paging system	X	X		
110. Fire Detection and Alarm System	X	X		

b. MPO reserves right to request additional data.

c. Critical Items:

1) Submit items marked with an asterisk within two (2) weeks after signed Contract.

2) No later than two (2) weeks after receiving approval, submit copies of purchase orders and vouchers showing final purchase agreement and promised delivery date.

2. Coordinate Submittal Schedule with the list of subcontracts, Schedule of Values, as well as the Contractor's Construction Schedule.

3. Prepare the schedule in chronological order. Provide the following information:

a. Scheduled date for the first submittal.

b. Related Section number and part of the Work covered.

c. Submittal category (Shop Drawings, Product Data, or Samples).

d. Name of the subcontractor.

4. Distribution:

a. Following response to the initial submittal, print and distribute copies to MPO, subcontractors, and other parties required to comply with submittal dates indicated. Post copies in the field office.

b. When revisions are made, distribute to the same parties and post in the same locations. Delete parties from distribution when they have completed their assigned portion of the Work and are no longer involved in construction activities.

5. Schedule Updating:

a. If directed by MPO, revise the schedule after any meeting or activity where revisions have been recognized or made. Issue the updated schedule concurrently with the report of the meeting.

F. Shop Drawings:

1. Submit newly prepared information drawn accurately to scale. Highlight, encircle, or otherwise indicate deviations from the Contract Documents. Do not reproduce Contract Documents or copy standard information as the basis of Shop Drawings. Standard information prepared without specific reference to the Project is not a Shop Drawing.

2. Shop Drawings, defined in Clause B.1, Definitions, shall include the following information:

a. All working and erection dimensions.

b. Identification of products and materials included by sheet and detail number.

c. Compliance with specified standards.

d. Notation of coordination requirements, connections to other work and details.

e. Notation of dimensions established by field measurement.

3. Submit Shop Drawings, drawn to scale on sheets at least 24×36 inches in size, on Ozalid prints of original Contractor's Drawings. Submit eight (8) sets of prints for each submission and resubmission until approved by MPO.

4. MPO's technical liaison will review submittals and take action as specified in Clause O of this section. When MPO takes no exception to the contents of the submittal, it shall not relieve Contractor from responsibility for any errors or omissions in such drawings and data, nor from responsibility for complying with requirements of this Contract, except with respect to variations described and approved in accordance with the following:

a. If Shop Drawings and data show variations from Contract requirements, Contractor shall describe such variations in writing separate from drawings at the time of submission. If MPO approves any such variation(s), it shall issue an appropriate Contract modification, except that, if variation is minor and does not involve a change in price or in time of performance, a modification need not be issued.

5. Two (2) copies of the reviewed prints with comments/revisions will be returned to the Contractor.

6. No Work shall be fabricated or installed unless and until the appropriate Shop Drawings have been approved by MPO. Do not use Shop Drawings without an appropriate final stamp indicating action taken.

G. Product Data:

1. Collect Product Data into a single submittal for each element of construction or system. Product Data includes printed information, such as manufacturer's installation instructions, Manufacturer's Safety Data Sheets (MSDS), catalog cuts, standard color charts, roughing-in diagrams and templates, standard wiring diagrams, and performance curves.

   a. Mark each copy to show applicable choices and options. Where printed Product Data includes information on several products that are not required, mark copies to indicate the applicable information. Include the following information:

      1) Manufacturer's printed recommendations.

      2) Compliance with trade association standards and with recognized testing agency standards.

      3) Applications of testing agency labels and seals.

      4) Notation of dimensions verified by field measurement and coordination requirements.

   b. Do not submit Product Data until compliance with requirements of the Contract Documents has been confirmed.

   c. Submittals:

      1) Submit eight (8) copies for each submission of manufacturer's cuts and data sheets until approved.

   d. Distribution:

      1) Furnish copies of final submittal to installers, subcontractors, suppliers, manufacturers, fabricators, and others required for performance of construction activities. Show distribution on transmittal forms.

      2) Do not proceed with installation until a copy of Product Data is in the Installer's possession.

      3) Do not permit use of unmarked copies of Product Data in connection with construction.

H. Samples:

1. Submit full-size, fully fabricated Samples cured and finished as specified or as scheduled and physically identical with the material or product proposed. Samples include partial sections

of manufactured or fabricated components, cuts or containers of materials, color range sets, and swatches showing color, texture, and pattern.

a. Mount or display Samples in the manner to facilitate review of qualities indicated. Include the following:

1) Specification Section number and reference.

2) Generic description of the Sample.

3) Sample source.

4) Product name or name of the manufacturer.

5) Compliance with recognized standards.

b. Submit Samples for review of size, kind, color, pattern, and texture. Submit Samples for a final check of these characteristics with other elements and a comparison of these characteristics between the final submittal and the actual component as delivered and installed.

1) Where variation in color, pattern, texture, or other characteristic is inherent in the material or product represented, submit at least 3 multiple units that show approximate limits of the variations.

2) Refer to other Specification sections for requirements for Samples that illustrate workmanship, fabrication techniques, details of assembly, connections, operation, and similar construction characteristics.

2. Submittals:

a. Except for Samples illustrating assembly details, workmanship, fabrication techniques, connections, operation, and similar characteristics, submit 4 sets. MPO will return one set marked with the action taken.

b. Maintain sets of Samples, as returned, at the Project Site, for quality comparisons throughout the course of construction.

3. Distribution of Samples:

a. Prepare and distribute additional sets to subcontractors, manufacturers, fabricators, suppliers, installers, and others as required for performance of the Work. Show distribution on transmittal forms.

4. Field samples are full-size examples erected on-site to illustrate finishes, coatings, or finish materials and to establish the Project standard.

a. Comply with submittal requirements to the fullest extent possible. Process transmittal forms to provide a record of activity.

I. Quality Assurance Submittals:

1. Submit quality-control submittals, including design data, certifications, manufacturer's instructions, manufacturer's field reports, and other quality-control submittals as required under other sections of the Specifications.

   a. Inspection and Test Reports: Requirements for submittal of inspection and test reports from independent testing agencies are specified in various other sections of the Specifications.

      1) Submit four (4) copies of the required reports.

2. Packaged Equipment:

   a. Where packaged (factory assembled) mechanical and electrical equipment is furnished, a certificate shall be included with the submission of shop drawings or catalog data stating that the equipment complies with OSHA, National Electrical Codes, and applicable Underwriter's Laboratories Standards in respect to motor protection, grounding, and protection against hazards, and is approved by all Regulatory Agencies.

J. Record Document Submittals:

1. Maintain a clean, undamaged set of black line white-prints of Contract Drawings and Shop Drawings. Mark the set to show the actual installation where the installation varies substantially from the Work as originally shown. Mark which drawing is most capable of showing conditions fully and accurately. Where Shop Drawings are used, record a cross-reference at the corresponding location on the Contract Drawings. Give particular attention to concealed elements that would be difficult to measure and record at a later date.

   a. Mark record sets with red erasable pencil. Use other colors to distinguish between variations in separate categories of the Work.

   b. Mark new information that is important to BNL but was not shown on Contract Drawings or Shop Drawings.

   c. Particular attention shall be given to recording of the fire protection, fire alarm and fire detection system operations and maintenance manuals and record documents.

   d. Note related change-order numbers where applicable.

   e. Organize record drawing sheets into manageable sets. Bind sets with durable-paper cover sheets; print suitable titles, dates, and other identification on the cover of each set.

2. Protect record documents from deterioration and loss in a secure, fire-resistant location. Provide access to record documents for MPO's reference during normal working hours.

3. Refer to Specification Sections for requirements of miscellaneous record keeping and submittals in connection with actual performance of the Work. Immediately prior to the date or dates of Substantial Completion, complete miscellaneous records and place in good order. Identify miscellaneous records properly and bind or file, ready for continued use and reference. Submit to MPO for the permanent project records.

K. Operation and Maintenance Data:

1. To aid the continued instruction of operating and maintenance personnel, and to provide a positive source of information regarding the products incorporated into the Work, furnish and deliver the data described in this Section and in pertinent other Sections of these Specifications.

2. Submit three (3) copies of data, bound in 8½" x 11" manuals, in 3-ring binders with section separators, complying with the requirements in the Shop Drawing section herein.

3. Operating and Maintenance Instructions:

a. Where Instruction Manuals are required to be submitted under other Sections of these Specifications, prepare in accordance with the provisions of this Section. Clearly identify the contents of each Manual on the front cover.

b. Contents: Include at least the following:

1) Neatly typewritten index near the front of the Manual, giving immediate information as to location within the Manual of all emergency information regarding the installation.

2) Complete instructions regarding operation and maintenance of all equipment involved including lubrication, disassembly, and reassembly.

3) Complete nomenclature of all parts of all equipment.

4) Complete nomenclature and part number of all replaceable parts, name and address of nearest vendor, and all other data pertinent to procurement procedures.

5) Copy of all guarantees and warranties issued.

6) Manufacturers' bulletins, cuts, and descriptive data, where pertinent, clearly indicating the precise items included in this installation and deleting, or otherwise clearly indicating, all manufacturers' data with which this installation is not concerned.

7) Such other data as required in pertinent Sections of these Specifications.

c. Revisions:

1) Following the indoctrination and instruction of operation and maintenance personnel, review all proposed revisions of the Manual with MPO, and make the revisions in the Manual and resubmit.

L. Recycled Materials Reports:

1. To the maximum extent, the following building materials shall be supplied from manufacturers that produce these materials with the use of recoverable (recycled) materials as required by Federal Regulation 40 CFR 247 and 248.

2. Materials:

a. Cement, Concrete, Masonry and Mortar.

b. Building and Roof Insulation.

c. Carpet and Floor Tile.

d. Toilet and Urinal Partitions.

e. Wheel Stops.

3. See the appropriate Sections for specifics.

4. Reports must include quantities and dollar value of each material that contains recovered (recycled) material.

M. Preventative Maintenance Program:

1. A program of scheduling preventative and routine maintenance covering all operating equipment shall be prepared by the General Contractor, Vendors, and Subcontractors and shall be assembled by the General Contractor in accordance with the requirements set forth in Section 01700.

2. The preparation, submittal, and approval of this program is prerequisite to Final Acceptance of the work and resultant Final Payment.

3. Each Respective Trade Contractor, Vendor, and Subcontractor shall furnish to the General Contractor for compilation, the pertinent data shown on the form attached to this Section 01300 applicable to each piece of operating equipment.

N. Certification of Specification Compliance:

1. Certification of compliance with specification performance standards and manufacturers' specifications and directions shall be furnished for any portion of this work for which specific performance requirements and/or manufacturers' specifications are listed.

2. Submit a notarized certification from the manufacturer certifying that products, material, systems or installations comply with the Specifications.

3. It shall be the responsibility of the General Contractor to secure two (2) copies of each certification when required and transmit same to BNL.

4. Certification shall be signed by an officer of the manufacturer, or other individual authorized to sign documents on behalf of the company, on the forms included in this Section.

5. Sample Certification Form (2 pages) is attached to this Section 01300. Each item requiring certification shall be so noted and affidavits shall be filed singly to cover each specified material, installation, application, and the like.

6. CERTIFICATION SHALL ACCOMPANY EACH SUBMITTAL.

O. MPO Review:

1. Except for submittals for the record or information, where action and return is required, MPO will review each submittal, mark to indicate action taken, and return promptly.

   a. Compliance with specified characteristics is the Contractor's responsibility.

2. Action Stamp: MPO will stamp each submittal with a uniform, action stamp. MPO will mark the stamp appropriately to indicate the action taken, as follows:

   a. No Exception Taken: When MPO marks a submittal "NET," the Work covered by the submittal may proceed provided it complies with requirements of the Contract Documents. Final payment depends on that compliance.

   b. Make Corrections Noted: When MPO marks a submittal "MCN," the Work covered by the submittal may proceed provided it complies with notations or corrections on the submittal and requirements of the Contract Documents. Final payment depends on that compliance.

   c. Revise and Resubmit, Rejected, and Submit Specified Item: When MPO marks a submittal with these comments, do not proceed with Work covered by the submittal, including purchasing, fabrication, delivery, or other activity. Revise or prepare a new submittal according to the notations; resubmit without delay. Repeat if necessary to obtain different action mark.

      1) Do not use, or allow others to use, submittals marked with these comments, at the Project Site or elsewhere where Work is in progress.

   d. Other Action: Where a submittal is for information or record purposes or special processing or other activity, MPO may return the submittal marked “Reviewed.”

   e. If the submittal is not properly prepared (i.e., Contractor’s stamp is missing; insufficient copies submitted; 3 copies of original literature is not submitted for product data; or

submission is illegible or does not identify which items are being submitted), the submittal will be returned marked “Not Reviewed.”

3. Unsolicited Submittals: MPO will return unsolicited submittals to the sender without action, or marked “Not Reviewed.”

PREVENTATIVE MAINTENANCE PROGRAM OPERATING EQUIPMENT DATA

1. Equipment Name

2. Manufacturer

3. Model No.

4. Serial No.

5. Contractor

6. Specialty Contractor

7. Vendor

8. Job Name

9. Job Number

10. Agency from whom parts may be obtained:
11. Agency from whom service may be obtained:

12.	Service Agreement:	Yes	No	Expires -
13.	a) Guarantee:	Yes	No	Expires -
	b) Warrantee:	Yes	No	Expires -

14.	Equipment Location:	Building Room No.	Floor Area Des.
15.	Area Served:	Building Room No.	Floor Area Des.

16. Furnished in accordance with:
    Contract Drawing No.
    Specification Paragraph

Date of Issuance: _____

Submitted By: _____

Equipment Name: _____

PMPD-1

PREVENTATIVE MAINTENANCE PROGRAM OPERATING EQUIPMENT DATA (cont'd)

17. List Shop Drawings, Equipment Cuts, Catalogs, or the other drawings which show this equipment.

18. Indicate spare parts lists, maintenance and instruction manuals, or other data furnished.

19. Indicate all services connected to this equipment - water, drain, steam, return, gas, vacuum, chilled water, electric, etc. Give sizes of connections, amount used, pressure, etc.

20. Type of refrigerant (if any)

21. Capacity of equipment

22. Electrical Characteristics: Voltage Amp Phase

23. Electrical Circuit Data Panel Designation
    Panel Location Circuit Number
    Fuse Size Fuse Type

24. Location and data of any auxiliaries

25. Other Data

Date of Issuance: _____

Submitted By: _____

Equipment Name: _____

PMPD-2

CERTIFICATION OF SPECIFICATION COMPLIANCE

I/WE, the MANUFACTURER/SUPPLIER and INSTALLER of _____

_____

as specified in Section Number _____ of the Contract Documents prepared by Brookhaven National Laboratory, Upton, New York 11973 for:

(Project Title) _____
(Building)_____ (J/N) _____
(Contract Number) _____

do (does) herein certify that all materials furnished for said project do fully comply with all specification requirements as stated within the Contract Documents and further certifies that installation of this work has been performed in strict accordance with recognized standards of the industry governing such work, and all applicable Codes, Regulations, and Standards.

CONTRACTOR: _____
CERTIFICATION BY:_____ TITLE: _____
ADDRESS: _____
CERTIFICATION DATED: _____

Distribution:

Original and One Copy to:

Brookhaven National Laboratory
Alan Raphael
Building 134-C
Upton, New York 11973

CSC-1

CERTIFICATION OF SPECIFICATION COMPLIANCE

CORPORATE ACKNOWLEDGEMENT

On the _____day of _____, before me came _____ to me known and who by me being duly sworn did depose and say that he resides at _____ _____ that he is the officer of the said corporation executing the foregoing instrument that he knows the seal of said corporation, that the seal affixed to said instrument is such corporate seal, that it was so affixed by order of the Board of Directors of said corporation and that he signed his name thereto by like order.

_____
Notary Public

INDIVIDUAL ACKNOWLEDGEMENT

State of
County of

On the _____day of _____, before me came _____ to me known and who by me being duly sworn did depose and say that he resides at _____ _____ that he is the individual who executed the foregoing instrument.

_____
Notary Public

PARTNERSHIP ACKNOWLEDGEMENT

State of
County of

On the _____day of _____, before me came _____ to me known and who by me being duly sworn did depose and say that he resides at _____ _____

that he is a partner in the firm of _____

doing business under the name of _____

and that he executed the foregoing instrument on behalf of said partnership.

_____
Notary Public

CSC-2

END OF SECTION 01300

Revision History	
Date	**Rev. No.**
02-19-09	0

See Instructions on Reverse Side

1. To	2. From	3. Project Title & Location	4. Submittal Date	5. New ☐ Resubmittal ☐
Giffels LLC / IBI Group 25200 Telegraph Rd., Suite 200 Southfield, MI 48033 Attention: Submittals Coordinator Email to: ST_Document_Submissions@IBIGroup.com		Brookhaven National Lab Central Chilled Water Fac Ph II Exp	6. Contractor's Submittal No.	
			7. Partial Submittal No.	8. Resubmittal No.

10. Contract	11. Giffels Professional Engineering Project No.	9. Contractor's Project ID
IF	SF070003	

12. Page No.	13. Mfr./Contractor	14. Spec Section	15. Item Description	16. No. Of Copies Prints	Reprod	Cat.	Samp.	GPE use only ACTION CODE

17. Contractor's Remarks

18. The undersigned certifies that the above submitted items have been reviewed in detail and are correct and in strict conformance with all requirements of the contract documents except as otherwise noted. Note: Approval of items submitted does not relieve contractor from complying with all requirements of the contract documents.

Name of Contractor _____

Signature _____

19. For Contractor/CM Use

Giffels Professional Engineering Tracking Number and Date Received

Copies/Distribution:

Dept.	Ck'd by	Date
ST/AT		
CV		
AR		
DN		
IN		
ME		
EL		
I&C		

Action Codes:

The contractor is responsible for complying fully with the contract documents. Submittals are reviewed by Giffels Professional Engineering for functional requirements only.

A. Approved.

B. Approved except as noted; resubmittal not required.

C. Not approved; correct and resubmit.

D. Other: See comments.

Giffels Professional Engineering / Owner Comments

Standard Submittal Form

IBI GROUP Giffels, LLC / IBI Group

Primary Dept. Checker

Review completed on

Returned to contractor on

Instructions for Use

A. Use this form for all submittals. Use a separate form for each submittal listed on the "Submittals List" for this contract.

B. Fill in all blank spaces above the heavy dividing line in the following manner:

1) Address of Giffels Professional Engineering or Owner's Office to whom submittal is being made.
2) Contractor's address where submittal is to be returned.
3) Project Title and Location.
4) Indicate Submittal Date.
5) Check the appropriate box for New or Resubmittal.
6) Contractor's Submittal or Tracking No. Use 1, 2, 3 etc. for easy reference.
7) If this is a Partial Submittal of this item, indicate this in the Partial Submittal box by placing a 1 in the box for the first submittal, 2 for the second, etc. If this is a complete submittal, leave space blank.
8) If this is a resubmittal (revision to a previous submittal), use the original submittal number and place the letter A in the resubmittal box for the first resubmittal, B for the second, etc. If this is a new submittal, leave space blank.
9) Contractor's Project No. or similar ID.
10) Contract Description.
11) Giffels Professional Engineering Project Number.
12) Indicate the Specification Section Page Number relating to the submittal.
13) Manufacturer/Contractor - Insert a short statement that will identify the item along with the Subcontractor's or Manufacturer's name.
14) Indicate the Specification Section Number relating to the submittal or provide the name of the responsible technical discipline.
15) Item Description - Insert a short statement describing the submitted item in generic terms (e.g., Misc. Iron, Globe Valves, etc.) with a list of all drawing or identifying numbers.
16) No. Of Copies - Indicate the number of copies and type of submittal for each item being submitted.
17) Indicate appropriate remarks as required and sign the certification that all submittals have been reviewed.
18) Contractor/CM signature and date.
19) Additional area for Contractor/CM use.

C. The balance of this form will be filled in by the Owner or Giffels Professional Engineering and returned to the Contractor along with the submittal.

SECTION 01352

LEED REQUIREMENTS

A. General:

1. Furnish all certificates, documentation, action plans, credits, and reports required for BNL to meet LEED requirements.

2. This Project has been designed to achieve the LEED credits as defined in the LEED™ Green Building rating system.

B. Summary:

1. This Section includes general requirements and procedures for the Project to meet LEED requirements.

2. See Divisions 1 through 16 for LEED requirements specific to the Work of each of those Divisions.

C. Definitions:

1. Chain-of-Custody Certificates: Certificates signed by manufacturers certifying that wood used to make products was obtained from forests certified by an FSC-accredited certification body to comply with FSC STD-01-001, "FSC Principles and Criteria for Forest Stewardship." Certificates shall include evidence that manufacturer is certified for chain of custody by an FSC-accredited certification body.

2. LEED: Leadership in Energy & Environmental Design.

3. Rapidly Renewable Materials: Materials made from plants that are typically harvested within a 10-year or shorter cycle. Rapidly renewable materials include products made from bamboo, cotton, flax, jute, straw, sunflower seed hulls, vegetable oils, or wool.

4. Regional Materials: Materials that have been extracted, harvested, or recovered, as well as manufactured, within 500 miles (800 km) of Project site. If only a fraction of a product or material is extracted/harvested/recovered and manufactured locally, then only that percentage (by weight) shall contribute to the regional value.

5. Recycled Content: The recycled content value of a material assembly shall be determined by weight.

   a. "Post-consumer" material is defined as waste material generated by households or by commercial, industrial, and institutional facilities in their role as end users of the product, which can no longer be used for its intended purpose.

b. "Pre-consumer" material is defined as material diverted from the waste stream during the manufacturing process. Excluded is reutilization of materials such as rework, regrind, or scrap generated in a process and capable of being reclaimed within the same process that generated it.

D. Submittals:

1. Project Materials Cost Data: Provide statement indicating total cost for building materials used for Project, excluding mechanical, electrical, and plumbing components, and specialty items such as elevators and equipment. Include statement indicating total cost for wood-based materials used for Project. Use Schedule of Values in Supplementary Conditions.

2. LEED Action Plans: Provide preliminary submittals within fourteen (14) days of date established for the Notice to Proceed indicating how the following requirements will be met:

   a. Credit MR 2.1: Waste Management Plan to divert construction waste from landfill.

   b. Credit MR 4.1 and Credit MR 4.2: List of proposed materials with recycled content. Indicate cost, post-consumer recycled content, and pre-consumer recycled content for each product having recycled content.

   c. Credit MR 5.1 and Credit MR 5.2: List of proposed regional materials. Identify each regional material, including its source, cost, and the fraction by weight that is considered regional.

3. LEED Progress Reports: Concurrent with each Application for Payment, submit reports comparing actual construction and purchasing activities with LEED action plans.

4. LEED Documentation Submittals:

   a. Credit EA 4.0: Product Data for new HVAC equipment indicating absence of HCFC refrigerants.

   b. Credit MR 2.1: Comply with Division 1 Section 01732 – “Construction Waste Management.”

   c. Credit MR 3.1 and Credit MR 3.2: Receipts for salvaged and refurbished materials.

   d. Credit MR 4.1 and Credit MR 4.2: Product data and certification letter indicating percentages by weight of post-consumer and pre-consumer recycled content for products having recycled content. Include statement indicating costs for each product having recycled content.

   e. Credit MR 5.1 and Credit MR 5.2: Product data for regional materials indicating location and distance from Project of material manufacturer and point of extraction, harvest, or recovery for each raw material. Include statement indicating cost for each regional material and the fraction by weight that is considered regional.

f. Credit MR 7: Product data and chain-of-custody certificates for products containing certified wood. Include statement indicating cost for each certified wood product.

g. Credit EQ 3.1:

1) Construction indoor-air-quality management plan.

2) Product data for temporary filtration media.

3) Product data for filtration media used during occupancy.

4) Construction Documentation: Six photographs at three different times during the construction period, along with a brief description of the SMACNA approach employed, documenting implementation of the indoor-air-quality management measures, such as protection of ducts and on-site stored or installed absorptive materials.

h. Credit EQ 3.2:

1) Signed statement describing the building air flush-out procedures including the dates when flush-out was begun and completed and statement that filtration media was replaced after flush-out.

2) Product Data for filtration media used during flush-out and during occupancy.

i. Credit EQ 4.1: Product data for adhesives and sealants used inside the weatherproofing system indicating VOC content of each product used. Indicate VOC content in g/L calculated according to 40 CFR 59, Subpart D (EPA Method 24).

j. Credit EQ 4.2: Product Data for interior paints and coatings indicating chemical composition and VOC content.

k. Credit EQ 4.4: Product data for products containing composite wood or agrifiber products or wood glues indicating that they do not contain urea-formaldehyde resin.

l. Credit EQ 7: Product Data and Shop Drawings for sensors and control system used to monitor and control room temperature and humidity.

E. Recycled Content of Materials:

1. Credit MR 4.1 (and Credit MR 4.2): Provide building materials with recycled content such that post-consumer recycled content plus one-half of pre-consumer recycled content constitutes a minimum of 20 percent of cost of materials used for Project.

a. Cost of post-consumer recycled content of an item shall be determined by dividing weight of post-consumer recycled content in the item by total weight of the item and multiplying by cost of the item.

b. Cost of post-consumer recycled content plus one-half of pre-consumer recycled content of an item shall be determined by dividing weight of post-consumer recycled content plus one-half of pre-consumer recycled content in the item by total weight of the item and multiplying by cost of the item.

c. Do not include mechanical and electrical components in the calculation.

F. Regional Materials:

1. Credit MR 5.1 (and Credit MR 5.2): Provide 20 percent of building materials (by cost) that are regional materials.

2. Credit MR 5.1: Provide 20 percent of building materials (by cost) that are regionally manufactured materials.

G. Low-Emitting Materials:

1. Credit EQ 4.1: For field applications that are inside the weatherproofing system, use adhesives and sealants that comply with the following limits for VOC content when calculated according to 40 CFR 59, Subpart D (EPA Method 24):

a. Wood Glues: 30 g/L.

b. Metal to Metal Adhesives: 30 g/L.

c. Adhesives for Porous Materials (Except Wood): 50 g/L.

d. Subfloor Adhesives: 50 g/L.

e. Plastic Foam Adhesives: 50 g/L.

f. Carpet Adhesives: 50 g/L.

g. Carpet Pad Adhesives: 50 g/L.

h. VCT and Asphalt Tile Adhesives: 50 g/L.

i. Cove Base Adhesives: 50 g/L.

j. Gypsum Board and Panel Adhesives: 50 g/L.

k. Rubber Floor Adhesives: 60 g/L.

l. Ceramic Tile Adhesives: 65 g/L.

m. Multipurpose Construction Adhesives: 70 g/L.

n. Fiberglass Adhesives: 80 g/L.

o. Contact Adhesive: 80 g/L.

p. Structural Glazing Adhesives: 100 g/L.

q. Wood Flooring Adhesive: 100 g/L.

r. Structural Wood Member Adhesive: 140 g/L.

s. Special Purpose Contact Adhesive (contact adhesive that is used to bond melamine covered board, metal, unsupported vinyl, Teflon, ultra-high molecular weight polyethylene, rubber or wood veneer 1/16 inch or less in thickness to any surface): 250 g/L.

t. Top and Trim Adhesive: 250 g/L.

u. Plastic Cement Welding Compounds: 350 g/L.

v. ABS Welding Compounds: 400 g/L.

w. CPVC Welding Compounds: 490 g/L.

x. PVC Welding Compounds: 510 g/L.

y. Adhesive Primer for Plastic: 650 g/L.

z. Sheet Applied Rubber Lining Adhesive: 850 g/L.

aa. Aerosol Adhesive, General Purpose Mist Spray: 65 percent by weight.

bb. Aerosol Adhesive, General Purpose Web Spray: 55 percent by weight.

cc. Special Purpose Aerosol Adhesive (All Types): 70 percent by weight.

dd. Other Adhesives: 250 g/L.

ee. Architectural Sealants: 250 g/L.

ff. Nonmembrane Roof Sealants: 300 g/L.

gg. Single-Ply Roof Membrane Sealants: 450 g/L.

hh. Other Sealants: 420 g/L.

ii. Sealant Primers for Nonporous Substrates: 250 g/L.

jj. Sealant Primers for Porous Substrates: 775 g/L.

kk. Modified Bituminous Sealant Primers: 500 g/L.

ll. Other Sealant Primers: 750 g/L.

2. Credit EQ 4.2: For field applications that are inside the weatherproofing system, use paints and coatings that comply with the following limits for VOC content when calculated according to 40 CFR 59, Subpart D (EPA Method 24) and the following chemical restrictions:

   a. Flat Paints, Coatings, and Primers: VOC not more than 50 g/L.

   b. Nonflat Paints, Coatings, and Primers: VOC not more than 150 g/L.

   c. Anticorrosive and Antirust Paints Applied to Ferrous Metals: VOC not more than 250 g/L.

   d. Clear Wood Finishes, Varnishes: VOC not more than 350 g/L.

   e. Clear Wood Finishes, Lacquers: VOC not more than 550 g/L.

   f. Floor Coatings: VOC not more than 100 g/L.

   g. Shellacs, Clear: VOC not more than 730 g/L.

   h. Shellacs, Pigmented: VOC not more than 550 g/L.

   i. Stains: VOC not more than 250 g/L.

   j. Flat Interior Topcoat Paints: VOC not more than 50 g/L.

   k. Nonflat Interior Topcoat Paints: VOC not more than 150 g/L.

   l. Anticorrosive and Antirust Paints Applied to Ferrous Metals: VOC not more than 250 g/L.

   m. Clear Wood Finishes, Varnishes and Sanding Sealers: VOC not more than 350 g/L.

   n. Clear Wood Finishes, Lacquers: VOC not more than 550 g/L.

   o. Floor Coatings: VOC not more than 100 g/L.

   p. Shellacs, Clear: VOC not more than 730 g/L.

   q. Shellacs, Pigmented: VOC not more than 550 g/L.

   r. Stains: VOC not more than 250 g/L.

   s. Primers, Sealers, and Undercoaters: VOC not more than 200 g/L.

   t. Dry-Fog Coatings: VOC not more than 400 g/L.

   u. Zinc-Rich Industrial Maintenance Primers: VOC not more than 340 g/L.

   v. Pretreatment Wash Primers: VOC not more than 420 g/L.

w. Aromatic Compounds: Paints and coatings shall not contain more than 1.0 percent by weight total aromatic compounds (hydrocarbon compounds containing one or more benzene rings).

x. Restricted Components: Paints and coatings shall not contain acrolein, acrylonitrile, antimony, benzene, butyl benzyl phthalate, cadmium, di (2-ethylhexyl) phthalate, di-n-butyl phthalate, di-n-octyl phthalate, 1,2-dichlorobenzene, diethyl phthalate, diethyl phthalate, dimethyl phthalate, ethylbenzene, formaldehyde, hexavalent chromium, isophorone, lead, mercury, methyl ethyl ketone, methyl isobutyl ketone, methylene chloride, naphthalene, toluene (methylbenzene), 1,1,1-trichloroethane, or vinyl chloride.

3. Credit EQ 4.4: Do not use composite wood or agrifiber products or adhesives that contain urea-formaldehyde resin.

H. Construction Indoor-Air-Quality Management:

1. Credit EQ 3.1: Comply with SMACNA's "SMACNA IAQ Guideline for Occupied Buildings under Construction."

a. If Owner authorizes use of permanent heating, cooling, and ventilating systems during construction period as specified in Division 1 Section "Temporary Facilities and Controls," install filter media having a MERV 8 according to ASHRAE 52.2 at each return-air inlet for the air-handling system used during construction.

b. Replace all air filters immediately prior to occupancy.

2. Credit EQ 3.2: Comply with one of the following requirements:

a. After construction ends, prior to occupancy and with all interior finishes installed, perform a building flush-out by supplying a total volume of 14000 cu. ft. (4 300 000 L) of outdoor air per sq. ft. (sq. m) of floor area while maintaining an internal temperature of at least 60 deg F (16 deg C) and a relative humidity no higher than 60 percent.

b. If occupancy is desired prior to flush-out completion, the space may be occupied following delivery of a minimum of 3500 cu. ft. (1 070 000 L) of outdoor air per sq. ft. (sq. m) of floor area to the space. Once a space is occupied, it shall be ventilated at a minimum rate of 0.30 cfm per sq. ft. (1.52 L/s per sq. m) of outside air or the design minimum outside air rate determined in EQ Prerequisite 1, whichever is greater. During each day of the flush-out period, ventilation shall begin a minimum of three hours prior to occupancy and continue during occupancy. These conditions shall be maintained until a total of 14000 cu. ft./sq. ft. (4 300 000 L/sq. m) of outside air has been delivered to the space.

END OF SECTION 01352

Revision History	
Date	**Rev. No.**
02-19-09	0

SECTION 01500

TEMPORARY FACILITIES

A. Summary:

1. This section specifies temporary services and facilities, including utilities, construction and support facilities, security and protection. Provide facilities ready for use. Maintain, expand and modify as needed. Remove when no longer needed, or replaced by permanent facilities.

B. Use Charges:

1. BNL will not impose on the Contractor, except for telephone charges, the cost or use charges for temporary utilities, providing the use of these utilities is not abused by the Contractor.

C. Regulations:

1. Comply with applicable laws and regulations.

D. Standards:

1. Comply with NFPA Code 241, "Building Construction and Demolition Operations", ANSI-A10 Series standards for "Safety Requirements for Construction and Demolition", and NECA Electrical Design Library "Temporary Electrical Facilities."

   a. Electrical Service: Comply with NEMA, NECA and UL standards and regulations for temporary electric service. Install service in compliance with National Electric Code (NFPA 70).

   b. GFIs: Ground fault circuit interrupters are required for all electric services to construction sites from other than permanent wiring of building or structure.

E. Inspections:

1. Arrange for BNL personnel to inspect and test each temporary utility, as required, before use.

F. Conditions of Use:

1. Keep facilities clean and neat. Operate in a safe and efficient manner. Take necessary fire prevention measures. Do not overload, or permit facilities to interfere with progress. Do not allow hazardous, dangerous or unsanitary conditions, or public nuisances to develop or persist on the site.

G. Materials and Equipment:

1. Provide new materials and equipment. When acceptable to BNL, undamaged previously used materials and equipment in serviceable condition may be used. Provide materials and equipment suitable for the use intended.

2. Lumber and Plywood:

   a. Provide fire treated lumber and plywood for sheds and offices. Provide minimum 5/8" thick exterior plywood for other uses. Comply with requirements in Section "Rough Carpentry", if included in Division 6.

3. Roofing Materials:

   a. Provide Class "A" standard weight asphalt shingles complying with ASTM D 3018, or Class "C" mineral surfaced roll roofing complying with ASTM D 249, where temporary roofing is required.

4. Paint:

   a. Prepare and paint new surfaces with one (1) prime coat and two (2) finish coats of lead- and PCB-free paint products matching surrounding areas. Comply with OSHA 29 CFR 1926, BNL Standards-Based Management System; ES&H Standards, 6NYCRR Parts 205 & 228, UL standards and regulations, and with requirements of Section "Finish Painting", if included in Division 9. Comply with all VOC standards and regulations.

5. Tarpaulins:

   a. Waterproof, fire-resistant, UL labeled tarpaulins with flame-spread rating of 15 or less. For temporary enclosures provide translucent nylon reinforced laminated polyethylene or polyvinyl chloride fire retardant tarpaulins.

6. Temporary Fencing:

   a. Wood slat and wire roll-out-type snow fencing, securely fastened to vertical galvanized or painted steel fence supports.

   b. Open-mesh expanded plastic sheet fencing is an acceptable substitute if properly installed and maintained.

   c. If temporary fencing is not maintained properly, BNL will secure the fencing and back charge the Contractor.

   d. Upon completion of the Contract, the temporary construction fence becomes the property of the Contractor and shall be removed completely from the Site. Post holes shall be filled and repaired to match adjacent area.

   e. Excavation outside the fenced construction site, such as trenching for utilities, shall be totally enclosed with expanded plastic fencing, securely fastened and maintained while the excavation is open.

H. Temporary Utility Installation:

1. All requests by the Contractor for temporary services, i.e. electric power, for their own use or for use by any subcontractor, shall be made only through their designated Modernization Project Office contact. All methods, materials, and scheduling of temporary services shall be as directed and approved.

   a. BNL will furnish, without charge, sources of water and electric power and will perform initial tie-in and removal of same. MPO will, upon request, indicate locations.

   b. Contractor shall supply, install, maintain, and remove all equipment and required devices for temporary water, power, and lighting systems from point of initial tie-in as necessary to perform the work.

   c. Water Service: Install water service and distribution piping of sizes and pressures adequate for construction from source point to all locations required for construction. Sterilize water piping prior to use. Provide 3/4" heavy-duty, rubber hoses 100 ft. long with shut-off nozzle at each outlet. Provide a proper back-flow preventer as required by MPO.

   d. Lighting: Provide temporary lighting with local switching to fulfill security requirements and provide illumination for construction operations and traffic conditions.

      1) Lamps and Light Fixtures: Provide general service incandescent lamps. Provide guard cages or tempered glass enclosures, where exposed to breakage. Provide exterior fixtures where exposed to moisture.

   e. Electric Power Service:

      1) Power available at the Site will be 100 amp, 480 volt, 3 phase service. Contractor shall provide extensions, GFI outlets, transformers where required and accessories for end use.

      2) Power Distribution System: Install wiring overhead, and rise vertically where least exposed to damage.

      3) Electrical Outlets: Provide properly configured NEMA polarized outlets. Provide outlets equipped with ground-fault circuit interrupters, reset button and pilot light, for connection of power tools and equipment.

      4) Electrical Power Cords: Provide grounded "hard-service" extension cords.

f. Telephones: BNL will provide temporary telephone service for construction field trailers.

1) Contact MPO Administration Office within five (5) working days of Notice to Proceed, and arrange for temporary telephone to be installed. Contractor will be billed for telephone service.

g. Sewers and Drainage: If storm sewers are available at the Site, the Contractor may provide temporary connections to remove storm water. Adhere to LEED requirements to prevent sedimentation of sewers. If sewers are not available or cannot be used, provide drainage ditches, dry wells, stabilization ponds or similar facilities.

1) Filter out sediment, construction debris and other contaminants that might clog sewers or pollute waterways before discharge.

2) Connect temporary sewers to the BNL storm system as directed by MPO. Maintain sewers and drainage facilities in a sanitary condition. Following heavy use, restore normal conditions promptly.

3) Provide earthen embankments, hay bales and polyethylene sheeting, and similar barriers in and around excavations and subgrade construction to prevent flooding by runoff of storm water from heavy rains.

I. Temporary Construction and Support Facilities Installation:

1. Locate for easy access. Maintain facilities until removal prior to Substantial Completion. Personnel remaining after Substantial Completion will be permitted to use permanent facilities, under conditions acceptable to BNL.

2. Provide incombustible construction for offices and sheds located within the construction area, or within 30 feet of building lines. Comply with requirements of NFPA 241.

3. Temporary Heat:

a. Provide temporary heat for curing or drying of completed installations or protection of installed construction from adverse effects of low temperatures or high humidity. Select equipment that will not have a harmful effect on completed installations; heating units shall have been tested and labeled by UL, FM or another recognized trade association related to the type of fuel used. Coordinate ventilation requirements to produce the ambient condition required.

1) Heating Facilities: Provide vented self-contained LP gas heaters with individual space thermostatic control. Use of gasoline- and kerosene-burning space heaters, or electric resistance heating units is prohibited.

2) Conform to requirements of NFPA 31, 54, 89M, 211, and OSHA Part 1926.154.

3) Permanent building HVAC equipment shall not be used for temporary heat.

4. Ventilation During Construction:

   a. Provide ventilation of enclosed areas during construction as may be required to permit proper curing and drying out, and to prevent excessive humidity, moisture and condensation.

   b. Ventilation shall be by natural or artificial means as required by conditions involved.

   c. Maintain proper ventilation for health and safety of personnel, conforming to standards of the American Conference of Governmental Industrial Hygienists Threshold Limit Values and Occupational Safety and Health Administration Standards for permissible exposure limits.

5. Field Offices:

   a. Provide insulated, weathertight offices of size to accommodate Contractor's field personnel.

   b. Provide heated and air-conditioned, prefabricated units or similar construction, on adequate foundations, with lockable entrances, operable windows and serviceable finishes.

   c. Keep clean and orderly for use for small progress meetings.

      1) Furnish with a minimum of a desk and chairs, and a plan table. Provide additional furniture and furnishings as required by the Contractor, and bulletin boards for posting required documents.

6. Storage and Fabrication Shed:

   a. Install sheds, equipped to accommodate materials and equipment involved. Sheds may be open shelters, enclosed spaces within the building, separate trailers, or combined with the field office.

7. Paving:

   a. Construct temporary paving for roads, storage areas and parking where permanent paved areas will be located. Comply with Section "Asphalt Concrete Paving." Coordinate with subgrade grading, compaction, installation and stabilization of subbase, and installation of base and finish courses of permanent paving.

      1) Delay installation of the final course of paving until Substantial Completion. Coordinate with weather conditions to avoid unsatisfactory results.

      2) Extend a temporary asphalt paving or crushed stone overlay in and around the construction area to accommodate delivery and storage of materials, equipment usage, administration and supervision as and where directed by MPO.

8. Sanitary Facilities include temporary toilets, wash and shower facilities and drinking water fixtures. Comply with regulations and local health codes. Install where facilities, as approved by MPO, will best serve the Project. Provide paper goods and similar disposable materials for each facility. Provide covered waste containers for used material.

   a. Toilets:

      1) Install self-contained single-occupant toilet units of the chemical type, properly vented and fully enclosed with a glass fiber reinforced polyester shell or similar nonabsorbent material. Toilets must be serviced at least weekly, and more often if needed, as determined by MPO.

   b. Dewatering Facilities and Drains:

      1) For temporary drainage and dewatering operations not associated with construction, comply with requirements of applicable Division 2 Sections. Where feasible, utilize the same facilities. Maintain excavations and construction free of water.

9. First Aid Kit:

   a. One (1) industrial first aid kit as manufactured by Acme Products, Kit Number 25, or equal, located where directed by MPO.

10. Temporary Partitions, Interior:

   a. Provide temporary, dust-tight partitions, complete with all doors, constructed of noncombustible materials with all joints and edges taped to separate existing facilities from areas under construction.

11. Temporary Lifts and Hoists:

   a. Provide facilities for hoisting materials.

   b. Contractor shall notify MPO 48 hours prior to any earthwork and/or rigging operations. All cranes, boom trucks, and lifting equipment must be approved by MPO prior to use. No equipment operations will be allowed until approval of equipment has been granted. Contact the MPO Hoist and Rigging Inspector, (631) 344-5456, for equipment inspections.

   c. All heavy equipment, including cranes and earth-working equipment, must be in compliance with OSHA and DOT requirements, must be in good repair, and is subject to inspection by BNL. Equipment found to be leaking oil or other fluids will not be permitted to operate at BNL.

12. Project Identification and Temporary Signs:

   a. Install project identification signs where indicated, or as directed. Support on framing of preservative treated wood or steel.

   b. BNL will prepare signs at BNL for pickup and installation by Contractor.

J. Collection and Disposal of Waste:

1. Collect waste and dispose into the dumpster daily. Comply with NFPA 241 for removal of combustible waste. Enforce requirements strictly. Provide a dumpster of sufficient size for the waste to be generated. Do not overfill. Remove and replace on a timely basis.

2. Handle hazardous, dangerous, or unsanitary waste materials separately from other waste by containerizing properly. Dispose in a lawful manner.

3. Comply with construction waste management requirements in Section 01352 “LEED Requirements” and Section 01732 "Waste Management".

K. Rodent and Pest Control:

1. BNL will provide, if required, an exterminator to perform extermination and control procedures so the project will be free of pests at Substantial Completion.

2. Notify BNL if pests or rodents are observed at the Site.

L. Stairs:

1. Provide temporary stairs where ladders are not adequate. Cover finished permanent stairs with a protective covering so finishes will be undamaged at the time of acceptance.

M. Security and Protection Facilities Installation:

1. Do not change from use of temporary security and protection facilities to permanent facilities until Substantial Completion.

a. Fire Protection:

1) Until fire protection is supplied by permanent facilities, install and maintain temporary fire protection of types needed to protect against predictable and controllable fire losses. Comply with NFPA 10 "Standard for Portable Fire Extinguishers" and NFPA 241 "Standard for Safeguarding Construction, Alterations and Demolition Operations."

b. Fire Extinguishers:

1) Provide, in accordance with OSHA requirements, hand-carried, portable UL-rated, Class "A" fire extinguishers for temporary offices and similar spaces. In other locations provide hand-carried, portable, UL-rated, Class "ABC" dry chemical extinguishers. Locate fire extinguishers where effective for the intended purpose, but not less than one on each floor near each usable stairwell.

a) Maintain unobstructed access to fire extinguishers, fire hydrants, temporary fire protection facilities, stairways and other access routes for fighting fires. Prohibit smoking in hazardous fire exposure areas.

b) Store combustible materials in containers in fire-safe locations.

c) Provide continuous supervision of welding operations, combustion type temporary heating units whenever operating, and other sources of fire ignition.

c. Barricades, Warning Signs and Lights:

1) Comply with standards and code requirements for erection of barricades. Paint appropriate warning signs to inform personnel and the public of the hazard being protected against. Where needed, provide lighting, including flashing lights.

2) Enclosure Fence: When excavation begins, install an enclosure fence with lockable entrance gates where indicated, or enclose the entire site or the portion sufficient to accommodate operations. Provide chain-link or expanded plastic fencing securely fastened and properly maintained.

3) Security Enclosure and Lockup: Install temporary enclosure of partially completed areas of construction. Provide locking entrances to prevent unauthorized entrance, vandalism and theft. Where materials and equipment must be stored, provide a secure lockup.

N. Environmental Protection:

1. Operate temporary facilities and equipment and conduct construction by methods that comply with environmental regulations, and minimize the possibility that air, waterways and subsoil might be contaminated or polluted.

2. When the work requires the Contractor to bring temporary fuel storage facilities on to the BNL Site, the Contractor shall be responsible for providing a temporary impermeable containment area for all fuel transfer operations in accordance with Suffolk County Department of Health Services, Article 12.

3. If, during construction activities, a release, discharge, or spill of petroleum products or chemicals occurs, the Contractor shall:

a. Immediately notify Safeguards and Security at Ext. 2222 (or 911) from Site telephones or 631-344-2222 from cell phones, and MPO, of the release, discharge, or spill.

b. Immediately, per SBMS, initiate cleanup and disposal operations by a BNL approved hazardous waste management contractor, complete the operations, and be responsible for monitoring and/or sampling in the event of a spill, to the satisfaction of BNL.

OR

Request MPO to initiate cleanup and disposal operations with the agreement that the Contractor shall assume all costs associated with the cleanup and disposal work.

4. The disposal of contaminated material will be coordinated by MPO through the Waste Management Division of the Environmental Management Division, with appropriate documentation and disposition forms.

5. Avoid use of tools and equipment which produce harmful noise. Restrict use of noise making tools and equipment to hours that will minimize complaints.

O. Operation:

1. Enforce strict discipline in use of temporary facilities. Limit availability to intended use to minimize abuse. Maintain facilities in good operating condition until removal.

2. Protect from damage by freezing temperatures and the elements.

   a. Maintain operation of enclosures, heating, cooling, humidity control, ventilation and similar facilities on a 24-hour day basis to achieve indicated results and to avoid damage.

   b. Prevent piping from freezing. Maintain markers for underground lines. Protect from damage during excavation operations.

P. Termination and Removal:

1. Remove each facility when the need has ended, or replaced by a permanent facility, or no later than Substantial Completion.

2. Complete or restore construction delayed because of interference with the facility. Repair damaged Work, clean exposed surfaces and replace construction that cannot be satisfactorily repaired.

   a. Temporary facilities are property of the Contractor.

   b. Remove paving that is not acceptable for integration into permanent paving. Where the area is intended for landscape development, remove soil and fill that does not comply with requirements. Remove materials contaminated with road oil, asphalt and other petrochemical compounds, and other substances that might impair growth of plant materials. Repair or replace street paving, curbs and sidewalks at the temporary entrances. Remove temporary asphalt paving and/or crushed stone that was placed only for temporary use and regrade to final contours.

   c. At Substantial Completion, renovate permanent facilities used during the construction period, including but not limited to:

      1) Replace air filters and clean inside of ductwork and housings.

      2) Replace worn parts and parts subject to unusual operating conditions.

      3) Replace burned out lamps.

END OF SECTION 01500

Revision History	
Date	**Rev. No.**
02-19-09	0

SECTION 01575

TEMPORARY EROSION AND SEDIMENTATION CONTROL

PART 1 GENERAL

1.01 SECTION INCLUDES

A. Prevention of erosion due to construction activities.

B. Prevention of sedimentation of waterways, open drainage ways, and storm and sanitary sewers due to construction activities.

C. Restoration of areas eroded due to insufficient preventive measures.

1.02 RELATED SECTIONS

A. See Section 01352 - LEED Requirements, for overall project goals relating to environment and energy.

B. Section 02300 - Site Preparation: Limits on clearing; topsoil stripping; disposition of vegetative clearing debris; and grading.

1.03 REFERENCES

A. EPA 832-R-92-005 - Storm Water Management for Construction Activities; U.S. Environmental Protection Agency; 1992.

B. USDA TR-55 - Urban Hydrology for Small Watersheds; USDA Natural Resources Conservation Service; 1986.

1.04 PERFORMANCE REQUIREMENTS

A. Comply with all requirements of U.S. Environmental Protection Agency for erosion and sedimentation control.

B. Install soil erosion and sediment control devices prior to the start of any clearing, grubbing, or excavation. Clearing, grubbing, or excavation shall not start without authorization from BNL.

C. Best Management Practices Standard: EPA 832-R-92-005.

D. Develop and follow an Erosion and Sedimentation Prevention Plan (ESPP) and submit periodic inspection reports.

E. Do not begin clearing, grading, or other work involving disturbance of ground surface cover until ESPP has been approved by MPO.

F. Timing: Put preventive measures in place as soon as possible after disturbance of surface cover and before precipitation occurs.

G. Storm Water Runoff: Control increased storm water runoff due to disturbance of surface cover due to construction activities for this project.
   1. Prevent runoff into storm and sanitary sewer systems, including open drainage channels, in excess of actual capacity or amount allowed by authorities having jurisdiction, whichever is less.
   2. Anticipate runoff volume due to the most extreme short term and 24-hour rainfall events that might occur in 25 years.

H. Erosion On Site: Minimize wind, water, and vehicular erosion of soil on project site due to construction activities for this project.
   1. Control movement of sediment and soil from temporary stockpiles of soil.
   2. Prevent development of ruts due to equipment and vehicular traffic.
   3. If erosion occurs due to non-compliance with these requirements, restore eroded areas at no cost to Owner.

I. Erosion Off Site: Prevent erosion of soil and deposition of sediment on other areas caused by water leaving the project site due to construction activities for this project.
   1. Prevent windblown soil from leaving the project site.
   2. Prevent tracking of mud onto roads outside site.
   3. Prevent mud and sediment from flowing onto sidewalks and pavements.
   4. If erosion occurs due to non-compliance with these requirements, restore eroded areas at no cost to Owner.

J. Sedimentation of Waterways On Site: Prevent sedimentation of waterways on the project site, including rivers, streams, lakes, ponds, open drainage ways, storm sewers, and sanitary sewers.
   1. If sedimentation occurs, install or correct preventive measures immediately at no cost to Owner; remove deposited sediments; comply with requirements of authorities having jurisdiction.
   2. If sediment basins are used as temporary preventive measures, pump dry and remove deposited sediment after each storm.

K. Open Water: Prevent standing water that could become stagnant.

L. Maintenance: Maintain temporary preventive measures until permanent measures have been established.

1.05 SUBMITTALS

A. See Section 01300 - Submittals, for submittal procedures.

B. Erosion and Sedimentation Control Plan:
   1. Submit within 2 weeks after Notice to Proceed.
   2. Include:
      a. Site plan (all work on 24"x36" min.) identifying soils and vegetation, existing erosion problems, and areas vulnerable to erosion due to topography, soils, vegetation, or drainage.
      b. Site plan showing grading; new improvements; temporary roads, traffic accesses, and other temporary construction; and proposed preventive measures.
      c. Where extensive areas of soil will be disturbed, include storm water flow and volume calculations, soil loss predictions, and proposed preventive measures.
      d. Schedule of temporary preventive measures, in relation to ground disturbing activities.
      e. Other information required by law.
      f. Format required by law is acceptable, provided any additional information specified is also included.
   3. Obtain the approval of the Plan by Owner.

C. Certificate: Mill certificate for silt fence fabric attesting that fabric and factory seams comply with specified requirements, signed by legally authorized official of manufacturer; indicate actual minimum average roll values; identify fabric by roll identification numbers.

D. Inspection Reports: Submit report of each inspection; identify each preventive measure, indicate condition, and specify maintenance or repair required and accomplished.

E. Maintenance Instructions: Provide instructions covering inspection and maintenance for temporary measures that must remain after Substantial Completion.

PART 2 PRODUCTS

2.01 MATERIALS

A. Mulch: Use one of the following:
   1. Straw or hay.
   2. Wood waste, chips, or bark.

B. Seed:
   1. Seed shall be quick growing ryegrass or approved equivalent, suitable to the area being protected.

C. Bales: Air dry, rectangular straw bales.
   1. Cross Section: 14 by 18 inches, minimum.
   2. Bindings: Wire or string, around long dimension.

D. Bale Stakes: One of the following, minimum 3 feet long:
   1. Steel U- or T-section, with minimum mass of 1.33 lb per linear foot.
   2. Wood, 2 by 2 inches in cross section.

E. Silt Fence Fabric: Polypropylene geotextile resistant to common soil chemicals, mildew, and insects; non-biodegradable; in longest lengths possible; fabric including seams with the following minimum average roll lengths:
   1. Average Opening Size: 30 U.S. Std. Sieve, maximum, when tested in accordance with ASTM D 4751.
   2. Width: 30"
   3. Permittivity: 0.05 sec^-1, minimum, when tested in accordance with ASTM D 4491.
   4. Ultraviolet Resistance: Retaining at least 70 percent of tensile strength, when tested in accordance with ASTM D 4355 after 500 hours exposure.
   5. Tensile Strength: 100 lb-f, minimum, in cross-machine direction; 124 lb-f, minimum, in machine direction; when tested in accordance with ASTM D 4632.
   6. Elongation: 15 to 30 percent, when tested in accordance with ASTM D 4632.
   7. Tear Strength: 55 lb-f, minimum, when tested in accordance with ASTM D 4533.
   8. Color: Manufacturer's standard, with embedment and fastener lines preprinted.
   9. Connectors shall be tie wires, nylon tie-wraps, or approved equivalent.

F. Silt Fence Posts: One of the following, minimum 5 feet long:
   1. Steel U- or T-section, with minimum mass of 1.33 lb per linear foot.
   2. Softwood, 4 by 4 inches in cross section.
   3. Hardwood, 2 by 2 inches in cross section.

G. Sand Bags:
   1. Sand bags shall be made from reinforced plastic and shall include ties. Sand shall be used as a fill material and shall be double bagged with separate ties for each bag, in order to prevent leakage.

H. Turbidity Curtain:
   1. Turbidity curtain shall consist of a geotextile, flotation device, and anchoring system.

I. Gravel: See Section 02057 for aggregate.

PART 3 EXECUTION

3.01 EXAMINATION

A. Examine site and identify existing features that contribute to erosion resistance; maintain such existing features to greatest extent possible.

3.02 PREPARATION

A. Schedule work so that soil surfaces are left exposed for the minimum amount of time.

3.03 SCOPE OF PREVENTIVE MEASURES

A. In all cases, if permanent erosion resistant measures have been installed temporary preventive measures are not required.

B. Construction Entrances: Traffic-bearing aggregate surface.
   1. Width: As required; 20 feet, minimum.
   2. Length: 50 feet, minimum.
   3. Provide at each construction entrance.
   4. Where necessary to prevent tracking of mud onto roads, provide wheel washing area out of direct traffic lane, with drain into sediment trap or basin.

C. Linear Sediment Barriers: Made of silt fences.
   1. Provide linear sediment barriers:
      a. Along downhill perimeter edge of disturbed areas, including soil stockpiles.
   2. Space sediment barriers with the following maximum slope length upslope from barrier:
      a. Slope of Less Than 2 Percent: 100 feet..
      b. Slope Between 2 and 5 Percent: 75 feet.
      c. Slope Between 5 and 10 Percent: 50 feet.
      d. Slope Between 10 and 20 Percent: 25 feet.
      e. Slope Over 20 Percent: 15 feet.

D. Storm Drain Curb Inlet Sediment Trap: Protect each curb inlet using one of the following measures:
   1. Filter fabric wrapped around hollow concrete blocks blocking entire inlet face area; use one piece of fabric wrapped at least 1-1/2 times around concrete blocks and secured to prevent dislodging; orient cores of blocks so runoff passes into inlet.
   2. Straw bale row blocking entire inlet face area; anchor into pavement.

E. Storm Drain Drop Inlet Sediment Traps: As detailed on drawings.

F. Temporary Splash Pads: Stone aggregate over filter fabric; size to suit application; provide at downspout outlets and storm water outlets.

G. Soil Stockpiles: Protect using one of the following measures:
   1. Cover with polyethylene film, secured by placing soil on outer edges.
   2. Cover with mulch at least 4 inches thickness of pine needles, sawdust, bark, wood chips, or shredded leaves, or 6 inches of straw or hay.

H. Mulching: Use only for areas that may be subjected to erosion for less than 6 months.
   1. Wood Waste: Use only on slopes 3:1 or flatter; no anchoring required.

I. Temporary Seeding: Use where temporary vegetated cover is required.

3.04 INSTALLATION

A. Maintain all soil erosion and sediment control devices.

B. Inspect regularly and at the direction of the MPO Construction Representative.

C. Remove any sediment buildup or as directed by the MPO Construction Representative.

D. Traffic-Bearing Aggregate Surface:
   1. Excavate minimum of 6 inches.
   2. Place geotextile fabric full width and length, with minimum 12 inch overlap at joints.
   3. Place and compact at least 6 inches of 1.5 to 3.5 inch diameter stone.

E. Silt Fences:
   1. Store and handle fabric in accordance with ASTM D 4873.
   2. Where slope gradient is less than 3:1 or barriers will be in place less than 6 months, use nominal 16 inch high barriers with minimum 36 inch long posts spaced at 6 feet maximum, with fabric embedded at least 4 inches in ground.
   3. Where slope gradient is steeper than 3:1 or barriers will be in place over 6 months, use nominal 28 inch high barriers, minimum 48 inch long posts spaced at 6 feet maximum, with fabric embedded at least 6 inches in ground.
   4. Where slope gradient is steeper than 3:1 and vertical height of slope between barriers is more than 20 feet, use nominal 32 inch high barriers with woven wire reinforcement and steel posts spaced at 4 feet maximum, with fabric embedded at least 6 inches in ground.
   5. Install with top of fabric at nominal height and embedment as specified.
   6. Do not splice fabric width; minimize splices in fabric length; splice at post only, overlapping at least 18 inches, with extra post.
   7. Fasten fabric to wood posts using one of the following:
      a. Four 3/4 inch diameter, 1 inch long, 14 gage nails.
      b. Five 17-gage staples with 3/4 inch wide crown and 1/2 inch legs.
   8. Fasten fabric to steel posts using wire, nylon cord, or integral pockets.
   9. Wherever runoff will flow around end of barrier or over the top, provide temporary splash pad or other outlet protection; at such outlets in the run of the barrier, make barrier not more than 12 inches high with post spacing not more than 4 feet.

F. Straw Bale Rows:
   1. Install bales in continuous rows with ends butting tightly, with one bale at each end of row turned uphill.
   2. Install bales so that bindings are not in contact with the ground.
   3. Embed bales at least 4 inches in the ground.
   4. Anchor bales with at least two stakes per bale, driven at least 18 inches into the ground; drive first stake in each bale toward the previously placed bale to force bales together.
   5. Fill gaps between ends of bales with loose straw wedged tightly.
   6. Place soil excavated for trench against bales on the upslope side of the row, compacted.

G. Mulching Over Large Areas:
   1. Dry Straw and Hay: Apply 2-1/2 tons per acre; anchor using dull disc harrow or emulsified asphalt applied using same spraying machine at 100 gallons of water per ton of mulch.
   2. Wood Waste: Apply 6 to 9 tons per acre.

3.05 MAINTENANCE

A. Inspect preventive measures weekly, within 24 hours after the end of any storm that produces 0.5 inches or more rainfall at the project site, and daily during prolonged rainfall.

B. Repair deficiencies immediately.

C. Silt Fences:
   1. Promptly replace fabric that deteriorates unless need for fence has passed.
   2. Remove silt deposits that exceed one-third of the height of the fence.
   3. Repair fences that are undercut by runoff or otherwise damaged, whether by runoff or other causes.

D. Straw Bale Rows:
   1. Promptly replace bales that fall apart or otherwise deteriorate unless need has passed.
   2. Remove silt deposits that exceed one-half of the height of the bales.

3. Repair bale rows that are undercut by runoff or otherwise damaged, whether by runoff or other causes.

E. Clean out temporary sediment control structures weekly and relocate soil on site.

F. Place sediment in appropriate locations on site; do not remove from site.

3.06 CLEAN UP

A. At the completion of all construction work, remove soil erosion and sediment control devices, unless directed otherwise by BNL. Verify that site drainage works properly, fine grading is complete, and final seeding has been completed. BNL reserves the right to require the contractor to maintain all soil erosion and sediment control devices until permanent soil erosion and sediment control is installed and functional.

B. Clean out temporary sediment control structures that are to remain as permanent measures.

C. Where removal of temporary measures would leave exposed soil, shape surface to an acceptable grade and finish to match adjacent ground surfaces.

END OF SECTION

Revision History	
Date	**Rev. No.**
02-19-09	0

SECTION 01600

MATERIALS AND EQUIPMENT

A. Products:

1. "Products" are items purchased for incorporation in the Work, whether purchased for the Project or taken from previously purchased stock.

   a. "Named Products" are items identified by manufacturer's product name, including make or model designation indicated in the manufacturer's product literature.

   b. Unless otherwise noted, "Named Products" are intended to specify a quality standard and are not intended to restrict competition.

B. Materials:

1. "Materials" are products that are shaped, cut, worked, mixed, finished, refined or otherwise fabricated, processed, or installed to form a part of the Work.

   a. "Volatile Organic Compounds" (VOCs) and their emissions are controlled under the New York Codes, Rules and Regulations of the State of New York. Architectural Surface Coatings must comply with 6 NYCRR Part 205. Coating Lines must comply with 6 NYCRR Part 228.

      1) For the purpose of the location, Nassau, Suffolk, Westchester and Rockland Counties fall under the compliance rules of the New York City metropolitan area.

      2) All coatings and coated products to be used in the Work shall comply with the appropriate rules and regulations.

C. Equipment:

1. "Equipment" is a product with operational parts, whether motorized or manually operated, that requires service connections such as wiring or piping.

D. Product List:

1. Products required for the Project are included in each section of the Specifications, and in the Submittals List in Section 01300. Prepare a schedule in tabular form showing each product. Include manufacturer's name and proprietary product names for each item. Coordinate the product schedule with the Contractor's Construction Schedule and Schedule of Submittals.

2. Within 60 days of commencement of Work, submit 3 copies of the completed product list schedule. Provide an explanation for omissions, and variations from Contract requirements. Partial lists shall be submitted earlier for those needing immediate approval so as not to delay the ordering to meet the Construction Schedule.

3. BNL will respond within 2 weeks of receipt of the Schedule. No response in this time constitutes no objection to products or manufacturers, but does not waive the requirement that products must comply with Contract Documents. BNL's response will include a list of unacceptable products.

E. Source Limitations:

1. To the fullest extent possible, provide products of the same kind, from a single source.

2. When the Contractor has the option of selecting between two or more products, the product selected shall be compatible with products previously selected.

F. Substitutions:

1. Unless otherwise specified, substitutions may be made for items specified when substitutions are approved equals. Submit substitutions for approval in accordance with Section 01300 "Submittals", and Section 01630 "Product Substitutions".

G. Nameplates:

1. Except for required labels and operating data, do not attach manufacturer's nameplates or trademarks on surfaces exposed to view in occupied spaces or on the exterior.

a. Equipment Nameplates: Provide a permanent nameplate on each item of service-connected or power-operated equipment. Locate on an inconspicuous accessible surface. The nameplate shall contain the following information and essential operating data:

1) Name of product and manufacturer.

2) Model and serial number.

3) Capacity.

4) Speed.

5) Ratings.

H. Product Delivery, Storage, and Handling:

1. Deliver, store and handle products in accordance with manufacturer's recommendations, using methods that will prevent damage, deterioration and loss.

a. Schedule delivery to minimize long-term storage and prevent overcrowding construction spaces. Coordinate with installation to ensure minimum holding time for items that are flammable, hazardous, easily damaged, or sensitive to deterioration, theft and other losses.

b. Deliver products in manufacturer's original sealed container or packaging system, complete with labels and instructions for handling, storing, unpacking, protecting and installing.

c. Inspect products on delivery to ensure compliance with Contract Documents, and to ensure that products are undamaged and properly protected.

d. Store products to facilitate inspection and measurement of quantity or counting of units. Store heavy materials away from the structure in a manner that will not endanger supporting construction.

e. Store products subject to damage by the elements above ground, under cover in a weathertight enclosure, with ventilation adequate to prevent condensation. Maintain temperature and humidity within range required by manufacturer's instructions.

I. Product Selection:

1. Provide products that comply with the Contract Documents, are undamaged and unused at installation.

2. Provide products complete with all accessories, trim, finish, safety guards and other devices and details needed for a complete installation and for the intended use and effect.

a. Standard Products: Where available, provide standard products of types that have been produced and used successfully in similar situations on other projects.

b. Proprietary Specification Requirements: Where only a single product or manufacturer is acceptable, provide the product indicated. No substitutions will be permitted.

c. Semiproprietary Specification Requirements: Where products are specified by name, accompanied by the term "or equal", comply with provisions for "substitutions" to obtain approval for use of an unnamed product.

d. Non-Proprietary Specifications: When Specifications list products or manufacturers that are available and may be used, but do not restrict the Contractor to use of these products only, the names and products establish the level of quality. The Contractor may propose any product that complies with Contract requirements. Comply with provisions for "substitutions" to obtain approval for use of an unnamed product.

e. Descriptive Specification Requirements: Where Specifications describe a product, listing characteristics required, with or without use of a brand name, provide a product that provides the characteristics and otherwise complies with requirements.

1) Performance Specification Requirements: Where Specifications require compliance with performance requirements, provide products that comply and are recommended for the application. Manufacturer's recommendations may be contained in product literature, or by certification of performance.

2) Compliance with Standards: Where Specifications require compliance with a standard, select a product that complies with the standard specified.

3) Visual Matching: Where Specifications require matching a Sample, the BNL decision on whether a proposed product matches is final. Where no product matches and complies with other requirements, comply with provisions for "substitutions" for selection of a matching product in another category.

4) Visual Selection: Where requirements include the phrase "...as selected from manufacturer's standard colors, patterns, textures..." or a similar phrase, select a product that complies with other requirements. BNL will select color, pattern and texture from the product line selected.

J. Installation of Products:

1. Comply with manufacturer's instructions and recommendations for installation of products. Anchor each product securely in place, accurately located and aligned with other Work. Clean exposed surfaces and protect to ensure freedom from damage and deterioration at time of Substantial Completion.

END OF SECTION 01600

Revision History	
Date	**Rev. No.**
02-19-09	0

SECTION 01630

PRODUCT SUBSTITUTIONS

A. General:

1. Requests for changes in products, materials, equipment, and methods of construction required by Contract Documents proposed by the Contractor after award of the Contract are considered requests for "substitutions." The following are not considered substitutions:

   a. Substitutions requested during the bidding period, and accepted by Addendum, prior to award of Contract.

   b. Revisions to Contract Documents requested by BNL.

   c. Specified options of products and construction methods included in Contract Documents.

B. Submittal:

1. Requests for substitution will be considered if received within 60 days after commencement of the Work. Requests received more than 60 days after commencement of the Work may be considered or rejected at the discretion of BNL.

   a. Submit 6 copies of each request for substitution in the form and in accordance with procedures for Change Order proposals.

   b. Identify the product, or installation method to be replaced in each request. Include related Specification Section and Drawing numbers. Document compliance with requirements for substitutions, and the following information, as appropriate:

      1) Product Data, including Drawings and descriptions of products, fabrication and installation procedures.

      2) Samples, where applicable or requested.

      3) A comparison of significant qualities of the proposed substitution with those specified.

      4) A list of changes or modifications needed to other parts of the Work and to construction performed by BNL and separate Contractors, that will be necessary to accommodate the proposed substitution.

      5) A statement indicating the substitution's effect on the Construction Schedule compared to the Schedule without approval of the substitution. Indicate the effect of the proposed substitution on overall Contract Time.

6) Cost information, including a proposal of the net change, if any, in the Contract Sum.

7) Certification that the substitution is equal to or better in every respect to that required by Contract Documents, and that it will perform adequately in application indicated. Include Contractor's waiver of rights to additional payment or time, that may be necessary because of the substitution's failure to perform adequately.

C. BNL's Action:

1. Within one week of receipt of the request for substitution, MPO will request additional information necessary for evaluation. Within 3 weeks of receipt of the request, or one week of receipt of additional information, whichever is later, MPO will notify the Contractor of acceptance or rejection. If a decision on use of a substitute cannot be made within the time allocated, use the product specified. Acceptance will be in the form of a Change Order.

D. Substitutions:

1. The Contractor's substitution request will be received and considered by BNL when one or more of the following conditions are satisfied, as determined by MPO; otherwise requests will be returned without action except to record noncompliance with these requirements.

a. Extensive revisions to Contract Documents are not required.

b. Proposed changes are in keeping with the general intent of Contract Documents.

c. The request is timely, fully documented and properly submitted.

d. The request is directly related to an "or equal" clause or similar language in the Contract Documents.

e. The specified product or method of construction cannot be provided within the Contract Time. The request will not be considered if the product or method cannot be provided as a result of failure to pursue the Work promptly or coordinate activities properly.

f. A substantial advantage is offered BNL, in terms of cost, time, energy conservation or other considerations of merit, after deducting offsetting responsibilities that BNL may be required to bear. Additional responsibilities for BNL may include additional compensation to an outside A/E Consultant, for redesign and evaluation services, increased cost of other construction by BNL or separate contractors, and similar considerations.

g. The specified product or method of construction cannot be provided in a manner that is compatible with other materials, and where the Contractor certifies that the substitution will overcome the incompatibility.

h. The specified product or method of construction cannot be coordinated with other materials, and where the Contractor certifies that the proposed substitution can be coordinated.

i. The specified product or method of construction cannot provide a warranty required by the Contract Documents and where the Contractor certifies that the proposed substitution provide the required warranty.

2. The Contractor's submittal and MPO's acceptance of Shop Drawings, Product Data or Samples that relate to construction activities not complying with the Contract Documents does not constitute an acceptable or valid request for substitution, nor does it constitute approval.

END OF SECTION 01630

Revision History	
Date	**Rev. No.**
02-19-09	0

THIS PAGE INTENTIONALLY LEFT BLANK

SECTION 01700

PROJECT CLOSEOUT

A. Operational Readiness Evaluation (ORE):

1. When the Project is substantially complete, the Contractor shall notify the MPO Construction Inspector, who will then notify the facility's Safety Representative that the facility is ready for an ORE.

2. Before notifying MPO, complete the following:

   a. Final cleanup, touch up and repair of marred exposed finishes.

   b. Startup testing of all electro-mechanical and fire detection/protection systems, power operated equipment and instruction of BNL personnel.

3. MPO reserves the right to set up a preliminary ORE prior to substantial completion.

4. Upon receipt of a notification for an ORE, the BNL ESH&Q Division will, with an appointed committee, conduct the review to determine if all safety and maintenance requirements have been met for occupancy and operation.

   a. Deficiencies will be noted, the Contractor will be given a copy and shall correct all that are Contract responsibilities. BNL will either correct the others with BNL personnel or issue a Change Order for the Contractor to make the corrections.

B. Final Inspection:

1. Concurrently with the ORE notification, the Contractor shall request MPO to perform a final inspection.

   a. Prior to requesting inspection by MPO, the Contractor shall assure that the Work is completed in accordance with the specified requirements and is ready for the requested inspection.

2. The Contractor shall provide to the MPO Construction Supervisor a list of items remaining to be completed or corrected.

   a. Within a reasonable time after receipt of the list, MPO will inspect to determine status of completion.

   b. Should MPO determine that the Work is not substantially complete:

      1) MPO will so notify the Contractor, in writing, giving the reasons therefore.

      2) The Contractor shall remedy the deficiencies and notify MPO when ready for reinspection.

3) MPO will then reinspect the Work.

4) This procedure will be repeated until all deficiencies have been corrected and Work accepted as completed.

5) Work performed during the pre-acceptance/acceptance/project close-out period shall be performed in accordance with the contractor's approved Safety Plan as well as all applicable BNL and OSHA construction safety requirements. This also includes any "punch-list work" generated during the construction period. Additional Work Planning may be necessary and will be accomplished at no additional cost to BNL.

3. Results of the completed inspection will form the basis of requirements for final acceptance.

C. Final Acceptance:

1. Before requesting final acceptance of the Work and the last monthly payment, complete the following:

a. Submit last monthly payment request for completed work with releases of claims. Final payment request shall be for balance of retainage held, in accordance with Clause K below.

b. Submit a copy of the final inspection list stating that each item has been completed or otherwise resolved for acceptance.

D. Record Document Submittals:

1. Do not use Record Documents for construction purposes; protect from loss in a secure location; provide access to Record Documents for BNL's reference.

2. Submit Record Documents in compliance with Section 01300 "Submittals".

E. Record Drawings:

1. Maintain a clean, undamaged set of blue or black line white-prints of Contract Drawings and Shop Drawings. Mark up these drawings to show the actual installation. Mark whichever drawing is most capable of showing conditions accurately. Give particular attention to concealed elements that would be difficult to measure and record at a later date.

a. Organize record drawing sheets into manageable sets, bind with durable paper cover sheets, and print suitable titles, dates and other identification on the cover.

F. Record Specifications:

1. Maintain one copy of the Project Manual, including addenda. Mark to show variations in actual Work performed in comparison with the Specifications and modifications. Give particular attention to substitutions, selection of options and similar information on

elements that are concealed or cannot be readily discerned later by direct observation. Note related record drawing information and Product Data.

a. Upon completion of the Work, submit record Specifications to BNL for their records.

G. Maintenance Manuals:

1. Organize maintenance data into sets of manageable size. Bind in individual heavy-duty 2-inch, 3-ring vinyl-covered binders, with pocket folders for folded sheet information. Mark identification on front and spine of each binder. Include the following information:

a. Completed Preventative Maintenance Program Data forms.

b. Emergency instructions.

c. Spare parts list.

d. Copies of warranties.

e. Wiring diagrams.

f. Recommended "turn around" cycles.

g. Inspection procedures.

h. Applicable Equipment Shop Drawings and Product Data.

i. Fixture lamping schedule.

j. Control setpoints.

k. Pump curves.

l. Calibration procedures.

H. Operating and Maintenance Instructions:

1. Arrange for the installer of equipment that requires regular maintenance to meet with BNL personnel to provide 8 hours of instruction in proper operation and maintenance. Include a detailed review of the following:

a. Maintenance manuals.

b. Spare parts and materials.

c. Tools.

d. Lubricants.

e. Control sequences.

f. Hazards.

g. Warranties and bonds.

h. Maintenance agreements and similar continuing commitments.

2. As part of instruction for operating equipment, demonstrate the following procedures:

   a. Startup and shutdown.

   b. Emergency operations.

   c. Noise and vibration adjustments.

   d. Safety procedures.

I. Certification of Specification Compliance:

1. In addition to the periodic submissions already made, organize one complete set of CSCs into a heavy-duty 3-ring, vinyl-coated binder. Mark identification on front and spine.

2. Include CSCs for each section of the Specifications, the work of each subcontractor, and each material and item of equipment furnished and/or installed.

J. Final Cleaning:

1. Employ experienced workers for final cleaning. Clean each surface to the condition expected in a commercial-building cleaning and maintenance program.

2. Complete the cleaning specified in Section 01800 before requesting Final Payment.

K. Final Payment:

1. After compliance with all of the above requirements for Project Closeout, submit final payment requesting release of balance of retainage and Contract closeout.

END OF SECTION 01700

Revision History	
Date	**Rev. No.**
02-19-09	0

SECTION 01732

WASTE MANAGEMENT

PART 1 GENERAL

1.01 WASTE MANAGEMENT REQUIREMENTS

A. Owner requires that this project generate the least amount of trash and waste possible.

B. Employ processes that ensure the generation of as little waste as possible due to error, poor planning, breakage, mishandling, contamination, or other factors.

C. Minimize trash/waste disposal in landfills; reuse, salvage, or recycle as much waste as economically feasible.

D. Required Recycling, Salvage, and Reuse: The following may not be disposed of in landfills or by incineration:
   1. Aluminum and plastic beverage containers.
   2. Corrugated cardboard.
   3. Wood pallets.
   4. Clean dimensional wood: May be used as blocking or furring.
   5. Land clearing debris, including brush, branches, logs, and stumps may be disposed of on BNL Campus at an area to be designated by BNL personnel.
   6. Concrete may be disposed of on BNL campus at a location to be determined by BNL personnel.
   7. Asphalt paving may be disposed of on the BNL site in an area to be selected by owner.
   8. Metals, including packaging banding, metal studs, sheet metal, structural steel, piping, reinforcing bars, door frames, and other items made of steel, iron, galvanized steel, stainless steel, aluminum, copper, zinc, lead, brass, and bronze.
   9. Glass.
   10. Plastic buckets.
   11. Carpet, carpet cushion, carpet tile, and carpet remnants: DuPont (http://flooring.dupont.com) and Interface (www.interfaceinc.com) conduct reclamation programs.
   12. Paint.
   13. Plastic sheeting.
   14. Rigid foam insulation.

E. LEED credit for this project is dependent on diversion of 50 percent, by weight, of potential landfill trash/waste by recycling and/or salvage.

F. Contractor shall submit monthly Waste Disposal Reports accounting for all waste removed from the project site and identifying landfill disposal, recycling, salvage, and reuse.

G. Contractor shall develop and follow a Waste Management Plan designed to implement these requirements.

H. Methods of trash/waste disposal that are not acceptable are:
   1. Burning on the project site.
   2. Burying on the project site.
   3. Dumping or burying on other property, public or private.
   4. Other illegal dumping or burying.
   5. Incineration, either on- or off-site.

I. Regulatory Requirements: Contractor is responsible for knowing and complying with regulatory requirements, including but not limited to Federal, State and local requirements, pertaining to legal disposal of all construction and demolition waste materials.

1.02 RELATED SECTIONS

A. Section 01300 - Submittals: Additional requirements for project meetings, reports, submittal procedures, and project documentation.

B. Section 01500 - Temporary Facilities: Additional requirements related to trash/waste collection and removal facilities and services.

1.03 DEFINITIONS

A. Clean: Untreated and unpainted; not contaminated with oils, solvents, caulk, or the like.

B. Construction and Demolition Waste: Solid wastes typically including building materials, packaging, trash, debris, and rubble resulting from construction, remodeling, repair and demolition operations.

C. Hazardous: Exhibiting the characteristics of hazardous substances, i.e., ignitibility, corrosivity, toxicity or reactivity.

D. Nonhazardous: Exhibiting none of the characteristics of hazardous substances, i.e., ignitibility, corrosivity, toxicity, or reactivity.

E. Nontoxic: Neither immediately poisonous to humans nor poisonous after a long period of exposure.

F. Recyclable: The ability of a product or material to be recovered at the end of its life cycle and remanufactured into a new product for reuse by others.

G. Recycle: To remove a waste material from the project site to another site for remanufacture into a new product for reuse by others.

H. Recycling: The process of sorting, cleansing, treating and reconstituting solid waste and other discarded materials for the purpose of using the altered form. Recycling does not include burning, incinerating, or thermally destroying waste.

I. Return: To give back reusable items or unused products to vendors for credit.

J. Reuse: To reuse a construction waste material in some manner on the project site.

K. Salvage: To remove a waste material from the project site to another site for resale or reuse by others.

L. Sediment: Soil and other debris that has been eroded and transported by storm or well production run-off water.

M. Source Separation: The act of keeping different types of waste materials separate beginning from the first time they become waste.

N. Toxic: Poisonous to humans either immediately or after a long period of exposure.

O. Trash: Any product or material unable to be reused, returned, recycled, or salvaged.

P. Waste: Extra material or material that has reached the end of its useful life in its intended use. Waste includes salvageable, returnable, recyclable, and reusable material.

1.04 SUBMITTALS

A. See Section 01300 - Submittals, for submittal procedures.

B. Landfill Alternatives Proposal: Within 10 calendar days after receipt of Notice of Award of Bid, or prior to any trash or waste removal, whichever occurs sooner, submit a projection of trash/waste that will require disposal and alternatives to landfilling, with net costs.
   1. Submit for MPO review and approval.

2. Include an analysis of trash/waste to be generated and landfill options as specified for Waste Management Plan described below.
3. Describe as many alternatives to landfilling as possible:
   a. List each material proposed to be salvaged, reused, or recycled.
   b. List the proposed local market for each material.
4. Provide alternatives to landfilling for at least the following materials:
   a. Concrete CMU.
   b. Fluorescent lamps (light bulbs).
   c. Clearing and grubbing debris.
   d. Metals.
   e. Asphalt.
   f. Lumber.
   g. Cardboard.

C. Once Owner has determined which of the landfill alternatives addressed in the Proposal above are acceptable, prepare and submit Waste Management Plan; submit within 10 calendar days.

D. Waste Management Plan: Include the following information:
1. Analysis of the trash and waste projected to be generated during the entire project construction cycle, including types, quantities and weights.
2. Landfill Options: The name, address, and telephone number of the landfill(s) where trash/waste will be disposed of.
3. Landfill Alternatives: List all waste materials that will be diverted from landfills by reuse, salvage, or recycling.
   a. List each material proposed to be salvaged, reused, or recycled.
   b. List the local market for each material.
   c. State the estimated volume and weight.
4. Meetings: Describe regular meetings to be held to address waste prevention, reduction, recycling, salvage, reuse, and disposal.
5. Materials Handling Procedures: Describe the means by which materials to be diverted from landfills will be protected from contamination and prepared for acceptance by designated facilities; include separation procedures for recyclables, storage, and packaging.
6. Transportation: Identify the destination and means of transportation of materials to be recycled; i.e. whether materials will be site-separated and self-hauled to designated centers, or whether mixed materials will be collected by a waste hauler.

E. Waste Disposal Reports: Submit at monthly intervals, with details of volume and weight of trash and waste, means of disposal or reuse; show both totals to date and since last report.
1. Submit Report on a form acceptable to Owner.
2. Landfill Disposal: Include the following information:
   a. Identification of material.
   b. Amount, in tons and cubic yards, of trash/waste material from the project disposed of in landfills.
   c. State the identity of landfills.
   d. Include manifests, weight tickets, and receipts as evidence of quantity.
3. Recycled and Salvaged Materials: Include the following information for each:
   a. Identification of material.
   b. Amount, in tons and cubic yards, date removed from the project site, and receiving party.
   c. Include manifests, weight tickets, receipts, and invoices as evidence of quantity.
   d. Certification by receiving party that materials will not be disposed of in landfills or by incineration.
4. Material Reused on Project: Include the following information for each:
   a. Identification of material and how it was used in the project.
   b. Amount, in tons or cubic yards.
   c. Include weight tickets as evidence of quantity.
5. Other Disposal Methods: Include information similar to that described above, as appropriate to disposal method.

PART 2 PRODUCTS

NOT USED

PART 3 EXECUTION

3.01 WASTE MANAGEMENT PROCEDURES

A. See Section 01800 - Cleaning and Disposal of Debris for trash/waste prevention procedures.

3.02 WASTE MANAGEMENT PLAN IMPLEMENTATION

A. Manager: Designate an on-site person or persons responsible for instructing workers and overseeing and documenting results of the Waste Management Plan.

B. Communication: Distribute copies of the Waste Management Plan to job site foreman, each subcontractor, and MPO.

C. Instruction: Provide on-site instruction of appropriate separation, handling, and recycling, salvage, reuse, and return methods to be used by all parties at the appropriate stages of the project.

D. Meetings: Discuss trash/waste management goals and issues at project meetings.
   1. Pre-bid meeting.
   2. Pre-construction meeting.
   3. Regular job-site meetings.

E. Facilities: Provide specific facilities for separation and storage of materials for recycling, salvage, reuse, return, and trash disposal, for use by all contractors and installers.
   1. As a minimum, provide:
      a. Separate area for storage of materials to be reused on-site, such as wood cut-offs for blocking.
      b. Separate dumpsters for each category of recyclable.
      c. Recycling bins at worker lunch area.
   2. Provide containers as required.
   3. Provide temporary enclosures around piles of separated materials to be recycled or salvaged.
   4. Provide materials for barriers and enclosures that are nonhazardous, recyclable, or reusable to the maximum extent possible; reuse project construction waste materials if possible.
   5. Locate enclosures out of the way of construction traffic.
   6. Provide adequate space for pick-up and delivery and convenience to subcontractors.
   7. If an enclosed area is not provided, clearly lay out and label a specific area on-site.
   8. Keep recycling and trash/waste bin areas neat and clean and clearly marked in order to avoid contamination of materials.

F. Hazardous Wastes: Separate, store, and dispose of hazardous wastes according to applicable regulations.

G. Recycling: Separate, store, protect, and handle at the site identified recyclable waste products in order to prevent contamination of materials and to maximize recyclability of identified materials. Arrange for timely pickups from the site or deliveries to recycling facility in order to prevent contamination of recyclable materials.

H. Reuse of Materials On-Site: Set aside, sort, and protect separated products in preparation for reuse.

I. Salvage: Set aside, sort, and protect products to be salvaged for reuse off-site.

END OF SECTION

Revision History	
Date	**Rev. No.**
02-19-09	0

THIS PAGE INTENTIONALLY LEFT BLANK

SECTION 01734

INDOOR AIR QUALITY

PART 1 GENERAL

1.01 SECTION INCLUDES

A. Construction procedures to promote adequate indoor air quality after construction.

B. Building flush-out after construction and before occupancy.

1.02 PROJECT GOALS

A. See Section 01352 - LEED Requirements, for overall project goals relating to environment and energy.

B. Dust and Airborne Particulates: Prevent deposition of dust and other particulates in HVAC ducts and equipment.
   1. Cleaning of ductwork is not contemplated under this Contract.
   2. Contractor shall bear the cost of cleaning required due to failure to protect ducts and equipment from construction dust.
   3. Protect condition of existing ducts and equipment prior to start of alterations.

C. Airborne Contaminants: Procedures and products have been specified to minimize indoor air pollutants.
   1. Furnish products meeting the specifications.
   2. Avoid construction practices that could result in contamination of installed products leading to indoor air pollution.

D. Ventilation: HVAC system has been designed to achieve the minimum requirements for ventilation specified in ASHRAE 62 with air change effectiveness of 0.9 or greater.

1.03 RELATED SECTIONS

A. Section 01352 - LEED Requirements.

B. Section 15700 - Environmental Equipment: HVAC filters.

C. Section 15950 - Testing and Balancing: Testing HVAC systems for proper air flow rates, adjustment of dampers and registers, and settings for equipment.

1.04 REFERENCES

A. ASHRAE Std 62 - Ventilation For Acceptable Indoor Air Quality; 2001.

B. ASHRAE Std 129 - Measuring Air-Change Effectiveness; 1997 (Reaffirmed 2002).

C. SMACNA (OCC) - IAQ Guideline for Occupied Buildings Under Construction; 1995.

1.05 DEFINITIONS

A. Adsorptive Materials: Gypsum board, acoustical ceiling tile and panels, carpet and carpet tile, fabrics, fibrous insulation, and other similar products.

B. Contaminants: Gases, vapors, regulated pollutants, airborne mold and mildew, and the like, as specified.

C. Particulates: Dust, dirt, and other airborne solid matter.

D. Wet Work: Concrete, plaster, coatings, and other products that emit water vapor or volatile organic compounds during installation, drying, or curing.

1.06 SUBMITTALS

A. See Section 01300 - Submittals, for submittal procedures.

B. Indoor Air Quality Management Plan: Describe in detail measures to be taken to promote adequate indoor air quality upon completion; use SMACNA IAQ Guidelines for Occupied Buildings Under Construction as a guide.
   1. Submit not less than 30 days after contract award.
   2. Identify potential sources of odor and dust.
   3. Identify construction activities likely to produce odor or dust.
   4. Identify areas of project potentially affected, especially occupied areas.
   5. Evaluate potential problems by severity and describe methods of control.
   6. Describe construction ventilation to be provided, including type and duration of ventilation, types of filters and schedule for replacement of filters.
   7. Describe cleaning and dust control procedures.
   8. Describe coordination with start-up procedures.

C. Interior Finishes Installation Schedule: Identify each interior finish that either generates odors, moisture, or vapors or is susceptible to adsorption of odors and vapors, and indicate air handling zone, sequence of application, and curing times.

D. Duct and Terminal Unit Inspection Report.

PART 2 PRODUCTS

2.01 MATERIALS

A. Low VOC Materials: See Section 01352 for specific requirements for materials with low VOC content.

PART 3 EXECUTION

3.01 CONSTRUCTION PROCEDURES

A. Prevent the absorption of moisture and humidity by adsorptive materials by:
   1. Sequencing the delivery of such materials so that they are not present in the building until wet work is completed and dry.
   2. Delivery and storage of such materials in fully sealed moisture-impermeable packaging.
   3. Provide sufficient ventilation for drying within reasonable time frame.

B. Begin construction ventilation when building is substantially enclosed.

C. If extremely dusty or dirty work must be conducted inside the building, shut down HVAC systems for the duration; remove dust and dirt completely before restarting systems.

D. HVAC equipment and supply air ductwork may be used for ventilation during construction:
   1. Operate HVAC system on 100 percent outside air, with 1.5 air changes per hour, minimum.
   2. Ensure that air filters are correctly installed prior to starting use; replace filters when they lose efficiency.
   3. Do not use return air ductwork for ventilation without BNL permission. Provide MERV 8 filters on all return air inlets.
   4. Seal return air inlets or otherwise positively isolate return air system to prevent recirculation of air; provide alternate return air pathways.

E. Do not store construction materials or waste in mechanical or electrical rooms.

F. Prior to use of return air ductwork without intake filters clean up and remove dust and debris generated by construction activities.
   1. Inspect duct intakes, return air grilles, and terminal units for dust.
   2. Clean plenum spaces, including top sides of lay-in ceilings, outsides of ducts, tops of pipes and conduit.

3. Clean tops of doors and frames.
4. Clean mechanical and electrical rooms, including tops of pipes, ducts, and conduit, equipment, and supports.
5. Clean return plenums of air handling units.
6. Remove intake filters last, after cleaning is complete.

G. Do not perform dusty or dirty work after starting use of return air ducts without intake filters.

H. Use other relevant recommendations of SMACNA IAQ Guideline for Occupied Buildings Under Construction for avoiding unnecessary contamination due to construction procedures.

3.02 BUILDING FLUSH-OUT

A. Perform building flush-out before occupancy.

B. Do not start flush-out until:
1. All construction is complete.
2. HVAC systems have been tested, adjusted, and balanced for proper operation.
3. Cleaning of inside of HVAC ductwork, specified elsewhere, has been completed.
4. Inspection of inside of return air ducts and terminal units confirms that cleaning is not necessary.
5. New HVAC filtration media have been installed.

C. Building Flush-Out: Operate all ventilation systems at normal flow rates with 100 percent outside air for at least 14 consecutive days.
1. Obtain Owner's concurrence that construction is complete enough before beginning flush-out.
2. If additional construction involving materials that produce particulates or any of the specified contaminants is conducted during flush-out, start 14 day period over.

D. Install new HVAC filtration media after completion of flush-out and before occupancy or further testing.

END OF SECTION

Revision History	
Date	**Rev. No.**
02-19-09	0

THIS PAGE INTENTIONALLY LEFT BLANK

SECTION 01800

CLEANING AND DISPOSAL OF DEBRIS

A. General:

1. Provide maintenance of buildings and site in a standard of cleanliness described herein throughout the entire construction period. In addition, comply with cleaning requirements described in various other sections of the Contract documents and the LEED waste management requirements to increase recycling and minimize waste sent to landfills.

B. Inspection:

1. Conduct daily inspection, and more often if necessary, to verify that requirements for cleanliness are being met.

C. Materials and Equipment:

1. Provide required personnel, equipment, and materials needed to maintain the specified standard of cleanliness.

2. Use only the cleaning materials and equipment which are compatible with the surface being cleaned, as recommended by the manufacturer of the material.

D. Progress Cleaning:

1. General:

a. Retain stored items in an orderly arrangement allowing maximum access, not impeding traffic or drainage, and providing required protection of materials.

b. Do not allow accumulation of scrap, debris, waste material, and other items not required for construction of this Work.

c. At least twice each month, and more often if necessary, completely remove all scrap, debris, and waste material from the BNL Site. Segregate waste for recycling. Burning of debris and rubbish will not be permitted.

d. Provide adequate storage for all items awaiting removal from the job site, observing requirements for fire protection and protection of the ecology.

e. All debris, rubbish and equipment removed from the work site shall pass through the Vehicle Radiation Monitor prior to exiting from the BNL Site.

2. Site:

a. Daily, and more often if necessary, inspect the site and pick up all scrap, debris, and waste material. Remove such items to the place designated for their storage.

b. Weekly, and more often if necessary, inspect all arrangements of materials stored on the site. Restock, tidy, or otherwise service arrangements to meet the requirements of subparagraph D.1 above.

c. Provide four (4) trash cans conveniently located for workers to dispose of food wrappers and small rubbish. Two (2) trash cans shall be designated for plastic, glass and metal recyclable containers.

d. Maintain the site in a neat and orderly condition at all times.

3. Structures:

a. Weekly, and more often if necessary, inspect the structures and pick up all scrap, debris, and waste material. Remove such items to the place designated for their storage.

b. Weekly, and more often if necessary, sweep interior spaces clean. Use sweeping compound to eliminate airborne dust when sweeping.

1) "Clean," for the purpose of this subparagraph, shall be interpreted as meaning free from dust and other material capable of being removed by use of reasonable effort and a hand-held broom.

c. As required preparatory to installation of succeeding materials, clean the structures or pertinent portions thereof to the degree of cleanliness recommended by the manufacturer of the succeeding material, using equipment and materials required to achieve the necessary cleanliness.

d. Unless temporary protection has been called for in the technical section for one floor finish, following the installation of finish floor materials, clean the finish floor daily (and more often if necessary) at all times while work is being performed in the space in which finish materials are installed.

1) "Clean," for the purpose of this subparagraph, shall be interpreted as meaning free from foreign material which, in the opinion of BNL, may be injurious to the finish floor material.

E. Final Cleaning:

1. "Clean," for the purpose of this Clause, and except as may be specifically provided otherwise, shall be interpreted as meaning the level of cleanliness generally provided by skilled cleaners using commercial-quality building-maintenance equipment and material.

2. Prior to completion of the Work, remove from the job site all tools, surplus materials, equipment, scrap, debris, and waste. Conduct final progress cleaning as described in Clause D.1 above.

3. Site:

   a. Unless otherwise specifically directed by BNL, broom clean paved areas on the site and public paved areas adjacent to the site.

   b. Completely remove resultant debris.

4. Structures:

   a. Exterior:

      1) Visually inspect exterior surfaces and remove all traces of soil, waste materials, smudges, and other foreign matter.

      2) Remove all traces of splashed materials from adjacent surfaces.

      3) If necessary to achieve a uniform degree of cleanliness, hose down the exterior of the structure.

      4) In the event of stubborn stains not removable with water, BNL may require light sandblasting or other commercial-type cleaning at no additional cost to BNL.

   b. Interior:

      1) Visually inspect interior surfaces and remove all traces of soil, waste materials, smudges, and other foreign matter.

      2) Remove all traces of splashed material from adjacent surfaces.

      3) Remove paint droppings, spots, stains, and dirt from finished surfaces.

   c. Glass: Remove all temporary labels. Clean inside and outside.

   d. Polished Surfaces: To surfaces requiring routine application of buffed polish, apply the polish recommended by the manufacturer of the material being polished.

5. Schedule final cleaning as approved by BNL to enable acceptance of a completely clean facility.

F. Cleaning During BNL Occupancy:

1. Should BNL occupy the Work or any portion thereof prior to its completion by the Contractor and acceptance by BNL, responsibilities for interim and final cleaning shall be as determined by BNL in accordance with the General Conditions of the Contract.

END OF SECTION 01800

Revision History	
Date	**Rev. No.**
02-19-09	0

SECTION 02057

SOILS AND AGGREGATES

1.1 SUMMARY

A. Section Includes:
   1. Define types of soils and aggregates.
   2. Specify their uses, including required compaction, for each type of construction.
   3. Establish the quality control procedures to verify compliance with the intent of the Contract Documents.
   4. The provisions of this Section apply to all work involving the use of the soils and aggregates defined, and shall govern except where specifically modified in a Section specifying particular work.

B. Related work Specified In Other Sections
   1. Earthwork – Division 2.
   2. Water Distribution – Division 2. .
   3. Sanitary Sewerage Division 2.
   4. Storm Drainage – Division 2.
   5. Flexible Pavement – Division 2.
   6. Cement Concrete Paving – Division 2.
   7. Fire Protection Systems– Division 15.
   8. Underground Electric Service – Division 16.

1.2 SUBMITTALS

A. Furnish submittals for items that are identified in this Section by a different typeface and a bracketed code (e.g., *Item [L]*). Refer to Division 1 General Requirements for definition of codes for types of submittals and the administrative requirements governing submittal procedure.

B. *Qualifications of the Testing Agency [Q]*. Submit and include its personnel for approval prior to retaining the agency.

C. *Test reports [T]*. Each Testing Agency shall submit, in duplicate, tests, investigations, findings and recommendations to the Contractor and to the Architect-Engineer, as soon as each report has been completed.

1.3 QUALITY ASSURANCE

A. Sampling and testing of soil and aggregate materials and of compaction shall be done by independent, well-established and qualified commercial testing agencies. The personnel shall be qualified and shall have had experience on projects equal to the complexity of this project.

B. The Owner will retain a testing agency for field quality control of operations. The Contractor shall retain a testing agency to perform material testing and to prepare test reports and other

submittals. The Contractor-retained agency shall not be the same agency that the Owner retains. The Architect-Engineer reserves the right to request change in personnel or firm at any time.

C. Submit proposed Contractor-furnished material, including off-site borrow material, to the Contractor-retained Testing Agency for its analysis and report, in sufficient time so as not to delay the progress of the Work.

1.4 MATERIAL DEFINITIONS

TYPE	DEFINITION		
General Requirements For Slag	Except as specifically indicated in these documents; blast and reverberatory furnace slags are permitted; basic oxygen, open hearth, and electric furnace slags are not permitted. These requirements supersede the requirements of reference documents.		
CL	Clay per ASTM D 2487-83, “Standard Classification of Soils for Engineering Purposes (Unified Soil Classification System)”, Classification CL.		
DG-1	Dense-Graded Aggregate with the following gradation:		
	Particle Size	% Passing By Weight	
		Minimum	Maximum
	1-1/2”	100	100
	1”	85	100
	1/2”	50	75
	#8	20	45
DG-2	Dense Graded Aggregate with the following gradation:		
	Particle Size	% Passing By Weight	
		Minimum	Maximum
	1”	100	100
	3/4”	90	100
	3/8”	65	85
	#8	30	50
GM-1	Durable, uniformly graded, crushed stone, crushed gravel or gravel, per the following gradation:		
	Particle Size U.S. Std. Square Mesh	% Passing By Weight	
	Sieve Size	Minimum	Maximum
	2 inch	100	100
	1/2 inch	45	85
	No. 4	20	85
	No. 30	5	30

TYPE	DEFINITION		
GM-2	Granular Material consisting of sand, gravel, crushed stone, iron blast-furnace slag, reverberation-furnace slag or a combination thereof graded as follows:		
	Particle Size	% Passing By Weight	
		Minimum	Maximum
	3”	100	100
	1”	60	100
	#100 Sieve	0	30
GM-2A	Same material as GM-2 except maximum size 1/2 inch.		
CA-1	Coarse Aggregate graded as follows:		
	Particle Size	% Passing By Weight	
		Minimum	Maximum
	1-1/2”	100	100
	1”	95	100
	3/4”	30	60
	#4 Sieve	0	8
E	Selected earth having an in-place density of at least 100 PCF; plasticity index less then 40; less than 4% organic materials; free of peat, rock or gravel larger than 3 inches (75 mm) in any dimension, debris, waste, frozen materials, vegetation, and other deleterious matter.		
NS	Natural Sand; clean, hard, durable particles of sand resulting from natural disintegration of rock, well graded from coarse to fine with 100% passing the #4 sieve and not over 7% passing the #200 sieve.		
PG	Pea Gravel; clean, hard, durable, free flowing, naturally rounded particles of rock, free from clay lumps, with 100% passing the 3/8” sieve and not over 5% passing the #8 sieve.		
Riprap	Sound, durable boulders or rock, well graded, of sizes 8 inches minimum to 24 inches maximum in either dimension, weighing not less than 50 pounds each, except as needed for filling-in spaces between the larger pieces.		
Topsoil			
For Removal	A surface soil layer containing organic matter such as roots or humus, and having a weight loss of 5% or more on ignition at 600 degC for 3 hours when compared with the oven dry weight as determined by ASTM D 2216-80, “Standard Test Method for Laboratory Determination of Water (Moisture) Content of Soil and Rock by Mass”. Refer to other applicable Contract Documents for topsoil stripping requirements.		

TYPE	DEFINITION
Project-usable	Selected, fertile, friable loam, stripped from the upper 12 inches and having a weight loss of 6 to 12% when tested per "For Removal" above; free from subsoil, heavy clay lumps, stones, grass clumps, and roots larger than 1/8 inch in diameter, or other objectionable matter such as garbage or rubbish. Refer to Earthwork in Division 2 and other applicable Contract Documents for topsoil placement requirements.
Unsuitable soil	Unsatisfactory Soils: ASTM D 2487, "Standard Classification of Soils for Engineering Purposes (Unified Soil Classification System)", soil classification groups GC, SC, ML, MH, CL, CH, OL, OH, and PT, or a combination of these group symbols. Unsatisfactory soils also include satisfactory soils not maintained within 2 %of optimum moisture content at time of compaction. Unsuitable soils also include any soil not meeting the requirements of the material definitions in this Section.

1.5 MATERIAL USE AND COMPACTION

A. Definitions
1. Maximum density. The dry density at optimum moisture content per ASTM D 1557, "Standard Test Methods for Laboratory Compaction Characteristics of Soil Using Modified Effort (56,000 ft-lbf/ft3 (2,700 kN-m/m3))", or ASTM D 698, "Standard Test Methods for Laboratory Compaction Characteristics of Soil Using Standard Effort (12,400 ft-lbf/ft3 (600 kN-m/m3))".
2. In-place density. The dry density, dry unit weight, or dry unit mass as applicable per ASTM D 1556, "Standard Test Method for Density and Unit Weight of Soil in Place by the Sand-Cone Method", D 2167, "Standard Test Method for Density and Unit Weight of Soil in Place by the Rubber Balloon Method", D 2922, "Standard Test Methods for Density of Soil and Soil-Aggregate in Place by Nuclear Methods (Shallow Depth)" and D 3017, "Standard Test Method for Water Content of Soil and Rock in Place by Nuclear Methods (Shallow Depth)", or D 2937, "Standard Test Method for Density of Soil in Place by the Drive-Cylinder Method", as appropriate.
3. Required compaction. The ratio of in-place density to maximum density, expressed as a percentage.
4. Compacted. Material at the required compaction or higher.
5. Subgrade. The in-place compacted soil, aggregate, fill or backfill that receives subsequent construction such as structures or overlying courses.
6. Exterior. Any area outside of building wall lines.
7. Interior. Any area within building wall lines.

B. Moisture Content And Tolerance
1. Material to be compacted shall contain the amount of moisture to obtain the required compaction uniformly throughout its depth. Add moisture to or dry out soils or aggregates being used so that the soils or aggregates are within 2%, plus or minus, of the optimum moisture content during compaction.

C. Schedule

1. When using hand-guided compaction equipment or hand tamping tools, the maximum loose measure lift shall be 4 inches in lieu of maximum lifts specified below when using machine compaction.

APPLICATION	TYPE	MAXIMUM LIFT THICKNESS, IN INCHES — LOOSE MEASURE FOR MACHINE COMPACTION	REQUIRED COMPACTION (%)
Fill			
Interior areas to bottom of aggregate base, including exterior areas to 5 feet outside building wall lines	GM-2	8	95
Under exterior slabs, pavements, or other improved surfaces of concrete, bituminous, or aggregate beyond 5 feet outside building wall lines			
(1) More than 18 inches below subgrade	E	8	90
(2) Subgrade to 18 inches below subgrade	E	8	95
Other locations	E	12	90
Backfill (To Subgrade)			
Under portland cement or bituminous concrete, or aggregate surfaced areas, such as floors, roads, floors, walks, parking lots, shoulders, or railroad trackage, including work in existing or future locations	GM-2	8	95
Where trench shoulder adjacent to areas described above is 2 feet or less	GM-2	8	95
Where new work crosses under previously constructed utilities	GM-2	8	95
Other exterior areas not described above	E OR GM-2	8	90
Interior areas to bottom of aggregate base, and exterior to 5 feet outside building wall lines	GM-2	8	95
Subgrade			
* Coordinate aggregate subbase with design details. * Compaction same as noted for fill or backfill for same type of area.			
Aggregate Subbase			
Flexible pavement	GM-2	8	95
Aggregate Base			
Flexible pavement	DG-1	6	95
Concrete pavement	DG-2	6	95
Interior concrete slabs	GM-1	6	95
Walks	GM-2	6	95

APPLICATION	TYPE	MAXIMUM LIFT THICKNESS, IN INCHES — LOOSE MEASURE FOR MACHINE COMPACTION	REQUIRED COMPACTION (%)
Embedment (Bedding And Initial Backfill)			
Requirements For Non-Corrosive Embedment. Provide the embedment material as specified, with the additional requirements as follows: having a specific soil resistivity tested per ASTM G57-78, "Standard Test Method for Field Measurement of Soil Resistivity Using the Wenner Four-Electrode Method", greater than or equal to 7500 ohm-centimeters when measured in a damp condition; having a uniform soil resistivity throughout and having aggregates with no sharp edges.			
Exterior pipes, including culverts, and irrigation, but excluding Underdrains	NS	6	90
Interior pipes, excluding Underdrains	NS	6	90
Steel tanks	NS	6	90
FRP tanks	PG	12	*
Anodes and associated cable	GM-2A	6	90
** Consolidate the material thoroughly, by probing or tamping near the tank, giving special attention to bedding under tank and between ribs.*			
Direct burial cable & direct burial conduit	NS	6	90
Underdrains	CA-1	6	90
Clay Seal			
At ends of culverts	CL	6	90
Under exterior slabs or pavements of concrete, bituminous or aggregate, as a seal for tops of excavations where shown	CL	6	95
All other exterior locations as a seal for tops of excavations where shown	CL	8	90
Aggregate Surface And Aggregate Shoulders			
General Purpose	DG-2	6	90
Topsoil	(Project-usable)	8	Same as adjacent natural soil
Riprap			
For use in erosion control, at end of culvert end sections and to line the ditches.			

1.6 FIELD QUALITY CONTROL

A. Refer to "Definitions" Article for the standards for test methods to be used for field quality control.

B. The Testing Agency for field quality control of operations shall determine the compaction of all material placed and shall conduct the following minimum number of in-place density tests after monitoring the placing and compacting of each lift.
   1. One test per lift of fill for each 2000 square yards.
   2. One test per final lift (subgrade) of fill or backfill within building wall lines, for each 600 square yards, both after compaction and before base or slab construction.
   3. Three tests per lift of trench backfill for each 500 lineal feet.

C. If compaction tests indicate that a layer has not been brought to the required compaction, recompact the area, prior to placement of additional material, until the required compaction is obtained. If the layer has been covered by a subsequent operation, remove such material before re-compacting the defective layer.

END OF SECTION

Revision History	
Date	**Rev. No.**
A	0
B	0
C	0
D	0
E	0
F	0
02-19-09	0

SK/djo
C:\D\TIMSDATASF\BROOKHAVEN_NATIONAL_LABORATORY\SF070003\200-PROJEXEC\280-SPEC\02057.DOC

THIS PAGE INTENTIONALLY LEFT BLANK

SECTION 02300

EARTHWORK

PART 1 GENERAL

1.1 SUMMARY

A. Section Includes:
   1. Complete Earthwork, as shown or specified, including but not limited to the following:
      a. Clearing and grubbing.
      b. Stripping topsoil.
      c. Removing fences and similar aboveground elements; removing or breaking-up walks, pavements and other surfaces not part of building demolition.
      d. Excavating
      e. Disposing of waste material
      f. Stockpiling reusable material
      g. Dewatering
      h. Excavation protection
      i. Filling and backfilling
      j. Grading
      k. Stabilizing subgrade
      l. Slope protection

B. Related Work Specified in Other Sections:
   1. Geotechnical Data – Information for Bidders.
   2. Soils and Aggregates - Division 2.
   3. Underground Electrical Services - Division 16
   4. Underground Utility Services - Division 2.

1.2 SUBMITTALS

A. Furnish submittals for items that are identified in this Section by different typeface and bracketed code (e.g., *Item [L]*). Refer to Division 1, General Requirements for definition of codes for types of submittals and administrative requirements governing submittal procedure.

B. *Contractor-furnished material [S]:* Submit to -Owner-retained Testing Agency for its analysis and report, in sufficient time so as not to delay progress of Work. Do not submit samples of concrete fill, riprap or lime.

C. Quality Assurance/Control Submittals
   1. Confirm Topography*:* before topsoil stripping operations, confirm topography shown on Contract Documents and state in writing acceptance of topography as basis of conditions before this Contract.
   2. Contractor Acceptance of Previous Contract Work*:* Existing conditions and elevations shown on drawings show work under previous contract and are not considered “as built”

conditions or “as built” drawings. Contractor shall confirm conditions and elevations on Contract Documents and state in writing acceptance of conditions and elevations as basis of conditions before entering into this Contract.

1.3 QUALITY ASSURANCE

A. Regulatory Requirements
   1. For work done on public property, comply with requirements of governmental authorities having jurisdiction.

1.4 PROJECT CONDITIONS

A. Existing Conditions
   1. Drawings show physical dimensions, existing levels and general topography of site, with subsurface obstructions, existing underground utilities and similar items being shown where known.
   2. Locations of existing underground utilities and subsurface obstructions are shown using best information available but with no representation that shown locations are accurate or that lines other than shown may not be present. Refer to heading “Protection” for details of requirements of identification and locations of these utilities.
   3. Information pertaining to existing conditions is offered to help in evaluation of Work, but with no specific representation, either expressed or implied, about completeness or accuracy. Contractor shall be responsible for deductions or conclusions made based on this information and that of any additional site inspections, if made.

B. Sequencing, Scheduling
   1. Use of explosives is prohibited.
   2. Take measures to prevent incorporation of excessive water into soil. Take appropriate measures to control dust and dirt, both windblown and from machine moving operations. Do not place fill over frozen subgrade or that covered with ice, snow or water.
   3. If earthwork operations are stopped for winter or other extended period, slope surface to provide run-off and provide temporary ditches and other drainage facilities to prevent water ponding.
   4. If any unidentified water conditions are encountered, or if conditions caused by rain, affect these operations or schedule of Work, notify Registered Design Professional. Registered Design Professional will give directions on procedure.

C. Cold Weather Operations
   1. Schedule Work to avoid earthwork operations under cold weather conditions. Obtain written approval from Owner before conducting earthwork operations at temperatures below 32 degF. Do not use frozen fill material.
   2. The following shall apply to approved earthwork operations between 15 degF and 32 degF:
      a. Sequencing, scheduling:
         1) Schedule removal of snow, topsoil, so that subgrades do not freeze before starting filling operations.

2) Schedule continuous earthwork operations to prevent freezing.
3) When earthwork operations are stopped at end of workday or are interrupted for any other reason for an extended period, place an insulating layer of soil over exposed subgrade. Remove insulating layer before resuming earthwork operations.
4) Stockpile frozen reusable materials for reuse after thawing.
5) If compaction operations are stopped because of changes in weather conditions, roll and slope surface to provide runoff. Do not operate equipment over these surfaces until they are dry enough to prevent rutting and remolding of top 8 inches.

b. Frozen surfaces:
1) Do not place fill over frozen material.
2) Remove frozen material and stockpile for future use after thawing.

c. Materials:
1) Within limits of Structures. Type GM-2 per Division 2, Soils and Aggregates.
2) Elsewhere. Per Division 2, Soils and Aggregates. If Type E is allowed but unfrozen material is not available, substitute Type GM-2 free of ice and frozen clods.

3. When temperature is less than 15 degF. Earthwork is not allowed.
4. Protection of foundations and similar structures. Provide sufficient earth cover or heating to prevent heaving or freezing under or around bearing surfaces.

D. Finishing of Spoils Area: Once spoils area is no longer required, area shall be compacted, graded and by other means as necessary in order to develop proper natural drainage of spoils area and adjacent areas. Miscellaneous construction debris shall be removed before grading and compacting sequences occur. Provide smooth transition from existing to new grades.

PART 2 PRODUCTS

2.1 MATERIALS

A. Concrete Fill. Normal weight concrete, of 2000 psi - 28-day strength, per ASTM C 94, “Standard Specification for Ready-Mixed Concrete”.

B. Earth. Refer to Division 2, Soils and Aggregates.
1. Local pockets of material that are substantially different in character from surrounding soil may be unsatisfactory for use as earth fill under certain climatic conditions or geological formations. Do not use these materials without approval of Registered Design Professional.

C. Aggregates*:* Refer to Division 2, Soils and Aggregates.

D. Topsoil. Refer to Division 2, Soils and Aggregates.

E. Unsuitable Material. Refer to Division 2, Soils and Aggregates.

F. Riprap. Refer to Division 2, Soils and Aggregates.

G. *Silt Fence [P]*: Prefabricated fabric panels (3’ x 100’) with 1 ¼” hardwood posts at 8’ intervals.
   1. JDR Enterprises, Inc., “Silt Lok 36-300P”
   2. Mirafi, Inc., “Silt Fence with Pockets”.

H. Provide temporary seeding cover of topsoil, and fertilize seeded areas in accordance with requirements of State Highway Specifications. Place seed at earliest time possible to ensure proper germination and growth, and at rates previously specified. Apply seed using mechanical seeders, or by hydro-seeder spraying method. After seeding, mulch with hay or straw at rates of 2.5 to 3.0 tons per acre.

PART 3 EXECUTION

3.1 EXAMINATION

A. Confirm Topography*:* before topsoil stripping operations, confirm topography shown on Contract Documents and state in writing acceptance of topography as basis of conditions before this Contract.

3.2 PREPARATION

A. Protection
   1. Maintain in service and protect from damage existing utilities that are to remain.
   2. Before commencing any site operations, contact municipal service departments, service companies and other utilities affected, and arrange to have lines that are within Work Area accurately located and identified with appropriate surface markers. Locate and identify lines adjacent to or extending across Work Area and mark on record document drawings.
   3. Conduct operations to insure safety of persons and to prevent damage to existing structures, pavements and utilities, trees and other vegetation to be left in place, construction in progress, and other property.
   4. Conduct operations and move materials to stockpile or disposal areas to ensure minimum interferences with operations of others, private and public.
   5. Do not close or obstruct streets, walks, and other facilities occupied and used by Owner or public, without prior written permission.

B. Clearing And Grubbing
   1. Clear Site, within Work Area as shown for construction operations. Remove trees, shrubs and other vegetation, except individual items shown to remain.
   2. Cut off standing trees and other vegetation at ground surface. Remove downed timber, logs and other vegetation resting on or partially embedded in ground surface, brush, weeds, undergrowth, rubbish and other debris.
   3. Remove stumps. Remove roots of 1/4 inch diameter or larger, organic or metallic debris embedded in ground, to depth of not less than 8 inches below existing ground or finished

grade if grade change is shown. Do not use grubbing equipment within drip line of trees shown to remain.

4. For trees left standing, trim dead branches. Trim live branches to heights and shape to retain natural proportions. Cut trimmed branches close to tree trunks or main branch. Seal cut surfaces with emulsified asphalt coating specially formulated for horticultural use.
5. Protect trees left standing against damage, including unnecessary cutting, breaking or skinning of roots, skinning and bruising of bark, smothering by stockpiling materials or parking of vehicles within drip line.
6. Coat cut or abraded surfaces of branches, trunk or roots with an emulsified asphalt coating specially formulated for horticultural use. Temporarily cover exposed roots with wet burlap to prevent drying out of roots and provide earth cover as soon as possible.
7. Repair or replace trees left standing that are damaged by Contract operations, at no additional cost to Owner. Only an established approved tree surgeon shall perform tree damage repair.

C. Stripping Topsoil

1. Strip surface grass and weeds vegetation, including roughly 1 inch of soil. Dispose of as waste material.
2. Strip topsoil, as defined “For Removal” in Division 2, Soils and Aggregates, in areas of earthwork operations. Strip to depths encountered. Strip in manner to prevent intermixing with, or removal of, underlying soil or objectionable materials.
3. In fill areas that are inside building wall lines (Interior Areas), strip topsoil to depths directed by Registered Design Professional. Stockpile or dispose of greater depth of topsoil at no additional cost to Owner and as designated for “Topsoil For Removal”. Term “inside building wall lines” includes areas within graded area that are designated for present or future buildings.
4. In fill areas, topsoil layers of 2 inches or less depth, after surface vegetation is stripped, may be left in place if approved by Registered Design Professional.
5. Stripping of surface vegetation may be combined with stripping topsoil, except for stripping of “Project-usable” TOPSOIL as defined in Division 2, Soils and Aggregates.
6. The depth of removal is expected to be 4 inches on an average basis over entire area stripped. Additional removal, or directed by Registered Design Professional, will be paid for per unit price provisions of Contract Documents.

D. Method Of Measurement

1. The quantities of (additional) topsoil removal shall be number of cubic yards of material in original position, measured by method of average end areas.
2. Volumetric quantities of (additional) topsoil removal shall be computed from cross section measurements provided by professional agencies retained by Owner. Notify Registered Design Professional sufficiently before each operation so that cross section elevations and measurements of ground surface may be taken.

3.3 CONSTRUCTION

A. Excavating

1. The construction methods specified are not intended to be completely detailed. Perform Work and provide properly functioning systems per applicable codes, manufacturer's instructions and best-accepted safe work practices.
2. Remove, haul, and dispose of materials and obstructions encountered. Remove obstructions within lines of construction, or that would interfere with construction. Obstructions include metallic, concrete, wooden or masonry debris, boulders up to 1/2 cubic yard, tree roots and similar items.
3. Excavate to levels required for bottoms of footings, walls, subgrade, underfloor fills, slabs laid on ground, utilities, storage tanks, and similar items. Excavate to extent necessary to provide excavation protection as specified under heading "Excavation Protection". Provide space to permit form placing, inspection of work, support system, waterproofing, and other underground work adjacent to construction. Where permitted, excavate to footing lines; otherwise, allow for form placement and removal.
4. At load-bearing elevations or subgrade, remove unsuitable materials disclosed below these elevations as defined in Division 2, Soils and Aggregates. Under footings and foundations, fill resulting void with Concrete Fill; under slabs and paving, fill resulting void as specified in Division 2, Soils and Aggregates. Footings and foundations shall bear on firm soil capable of supporting loadings. If satisfactory bearing capacity is not found at bearing elevations shown, deepen, or enlarge excavations. Excavation, and fill, beyond limits shown, when authorized, will be considered as Changes In Work and will be paid for by Owner. However, if excavations are carried beyond limits shown, without authorization, or unsatisfactory conditions occur due to Contractor's operations, Contractor shall fill voids with one of materials specified above, at his own expense.
5. Protect active utilities within work areas. Immediately notify Registered Design Professional of any utilities encountered that are not shown.
6. Store on Project Site where shown or directed, excavated material suitable and approved for backfill, fill, and rough grading. Remove unsuitable material and excess suitable material from Project Site. Provide additional fill material, if required and if no Owner-furnished borrow area is indicated.
7. Trim, level and clean excavations just before placement of later work. If bottom of continuous footings are at different elevations, step excavation where soil permits, or slope if necessary. Later work shall not be performed until soil conditions have been approved.
8. Excavate for underground piping systems and utility lines, including civil/site, mechanical, and electrical systems. Excavate trench bottoms to 4" below bottom of pipe to allow for bedding material.
9. Saw cut at pavement removals.

B. Disposing Of Waste Material

1. Haul, and dispose of, waste material, debris, rubble, and excess excavated material, other than that defined as Earth and Topsoil in Division 2, Soils and Aggregates, to designated spoils area on Owner's property.
2. Divert construction and demolition debris from disposal in land fills and incinerators. Redirect recyclable recovered resources back to the manufacturing process. Redirect

reusable materials to appropriate sites. Construction Waste Management shall comply with LEED version 2.2, MR Credit 2.1

C. Project-Usable Material
   1. Stockpile Project-usable Topsoil in designated area clear of new construction operations, separate from other stockpiled soils to prevent intermixing. Shape pile so that surface water drains freely and to minimize wind erosion.
   2. Haul and stockpile excess excavated material defined as Earth and Project-usable Topsoil, to stockpile areas on Owner's property as designated. Segregate stockpiles of Earth and Project-usable Topsoil to prevent intermixing and contamination.
   3. Provide temporary seeding cover of topsoil, and fertilize seeded areas in accordance to requirements of State Highway Specifications. Place seed at earliest time possible to ensure proper germination and growth, and at rates previously specified. Apply seed using mechanical seeders, or by hydro-seeder spraying method. After seeding, mulch with hay or straw at rates of 2.5 to 3.0 tons per acre.

D. Dewatering
   1. Maintain positive, free-draining drainage within Work area. Arrange site excavation and fill work to avoid obstructing natural flow of water away from areas of work. If necessary, provide temporary drainage ditches or temporary pumping to existing drainage facilities on or off site. Fill temporary drainage ditches as necessity is reduced.
   2. Provide temporary drainage to keep excavations free from water until permanent construction is in place, backfilling is completed, and building drains are operating and capable of maintaining drainage. Submit proposed method of dewatering that includes points of discharge to Registered Design Professional and Owner's Representative for approval before implementation. Provide systems required by site conditions. Operate pumps and other water moving systems to accomplish above 24-hours per day.

3.4 PROTECTION

A. Provide excavation protection to support earth banks for excavations, including trenches, and to protect existing structures, services and utilities.

B. Excavation protection shall include angle of repose of soil or shall include support systems, based on site conditions and the following factors:
   1. Depth of cut and type of soil.
   2. Water table and variations in its extent while excavation is open.
   3. Anticipated changes in material attributable to exposure to air, sun, water or freezing.
   4. Load imposed by structures, equipment, overlying or stored material or adjacent traffic.
   5. Vibration from traffic, equipment, demolition or construction operations.
   6. Space allowed for excavations.

C. Design and provide support systems of required strength, rigidity and spacing to suit site conditions, and in quantities to maintain project schedules.

D. Support system may include, but not be limited to:
   1. Bracing

2. Cribbing
3. Sheet piling
4. Shoring
5. Stringers
6. Tie rods or tie backs
7. Tight sheeting
8. Trench jack
9. Trench shield
10. Underpinning
11. Uprights

E. Maintain support systems in place until immediately before filling or backfilling operations. Remove support system in stages as filling or backfilling progresses. Parts of support system may be left in place up to 2 feet below finished grades where shown on contract drawings or approved in writing by Registered Design Professional.

3.5 QUALITY CONTROL - PROOFROLLING

A. Proof roll areas to be paved or surfaced, and areas within building footprint to 10 ft. outside of building wall lines.

B. Remove soft or unstable areas disclosed by proof rolling and fill as specified in Division 2, Soils and Aggregates. Material removed may be reused if it meets requirements of Division 2, Soils and Aggregates and other applicable requirements.

C. Proof roll with at least one pass of equipment, with perpendicular passes for thorough coverage. Use (fully loaded single axle dump truck) (smooth steel drum vibratory compactor with minimum static weight of 3,000 lbs. and minimum dynamic force of 10,000 lbs.) (50-ton rubber tired roller). Arrange observation of proof rolling by Testing Agency.

D. Where basements and voids remain because of demolition operations, fill these areas per Division 2, Soils and Aggregates. Grade fill surface to blend in with adjacent grades and to provide surface water drainage.

3.6 FILLING AND BACKFILLING

A. General

1. Schedule filling and backfilling operations to expedite construction progress and to maintain positive site drainage. Backfill adjacent to walls only after walls have attained minimum strength equal to 80% of design strength and no earlier than seven days after placing of concrete. Backfill after work has been inspected and approved by Registered Design Professional. Backfill both sides of retaining and grade walls at same time. Backfill at building walls after first floor slabs are in place, or if walls are properly braced, when there is a basement. Backfill in manner to prevent excessive pressure against or damage, including hydraulic, to adjacent work. Any resultant damage shall be corrected at Contractor's expense.
   a. Fill required in areas scheduled to receive piles or machine-drilled piers shall be placed and compacted before installation of piles or machine-drilled piers.
   b. In areas designed to have utilities, including sewers, where fill is also required, place and compact fill before placement of utilities or sewers.
2. Spread fill and backfill in uniform horizontal layers, filling holes and low areas first. Thickness of layers shall be as specified in Division 2, Soils and Aggregates.
3. Plow, step, bench, or break up sloped surfaces steeper then 4 horizontal to 1 vertical so that fill can bond with existing material.
4. Except as indicated, provide minimum 6-inch aggregate base under concrete slabs on grade.
   a. Place vapor barrier at bottom of aggregate base. Lap joints of underlayment sheets 6 inches minimum, and 9 inches onto adjacent vertical surfaces, and seal vapor-tight. Seal underlayment around penetrations, and at damaged areas to maintain vapor-tight seal. Do not puncture underlayment during construction operations.
5. Compact each layer before placing succeeding layers. Provide compaction equipment of type best suited to achieve compaction specified for type of soil used. Use particular care to prevent "bulking" of fine granular fill. Terminate fills in true planes at correct elevations.

B. Materials And Compaction

1. The materials to be used and required compaction for each type of construction shall be as defined and specified in Division 2, Soils and Aggregates.

3.7 GRADING

A. Grade areas to receive fill and backfills to levels indicated, as specified in Division 2, Soils and Aggregates.

B. Remove unsuitable material, vegetation, rubbish and debris from areas to be filled.

C. Rough grade landscaped areas, place TOPSOIL as specified in Division 2, Soils and Aggregates and smooth-finish grade to required elevations. Finish-grade other areas to finish grades, lines and elevations indicated. Finish-grade areas used for temporary construction facilities when use is terminated.

D. Slope earth away from building walls. Finish grades not otherwise shown shall be uniform levels or slopes between given points or between given points and existing grades. Provide rounding at top and bottom of banks and at other breaks in grades. Rough grade to within 0.1 foot; finish grade to within 0.05 foot, of required slopes, grades and elevations.

3.8 SLOPE PROTECTION

A. Lay riprap to extent shown, starting at low points and working up slopes. Place riprap individually, firmly embedding each piece into substrate and against adjacent pieces. Use small pieces to fill in voids between larger pieces. Finished surface shall not deviate from elevations or slopes shown, in any direction, within tolerances of plus or minus 1 inch when measured with 10-foot straightedge. Grout joints with mixture of 1 part portland cement and 3 parts sand, using clean water.

B. Place 2500 psi concrete paving to extent shown, per Division 3, Cast-in-Place Concrete. Install Joints in paving at 10 feet on center unless otherwise shown.

3.9 AGGREGATE SURFACE

A. Install as indicated. Compact per Division 2, Soils and Aggregates.

3.10 AGGREGATE SHOULDERS

A. Install as indicated. Compact per Division 2, Soils and Aggregates.

END OF SECTION

Revision History	
Date	**Rev. No.**
A	0
B	0
C	0
D	0
E	0
F	0
02-19-09	0

SK/djo
C:\D\TIMSDATASF\BROOKHAVEN_NATIONAL_LABORATORY\SF070003\200-PROJEXEC\280-SPEC\02300.DOC

SECTION 02510

COOLING WATER AND FIRE PROTECTION

PART 1 GENERAL

1.1 SUMMARY

A. Section Includes:
   1. This Section includes water-distribution piping and specialties five feet outside the building perimeter for the following:
      a. Water services.
      b. Fire-service mains.
      c. Cooling water return (CWR) and cooling water supply (CWS).
      d. Aboveground water piping for applications other than water-service piping.
   2. Work for each system includes design and location of each system, connections to existing work, required components, related earthwork, concrete work and necessary testing, to provide complete, functioning systems.
   3. Work includes interface with aboveground systems within building limits 12 inches above finish floor or as shown, and provision of blind flange at interface.
   4. Complete disinfection, testing, and flushing, separately from above ground systems.

B. Related Sections:
   1. Underground Piping Systems - Division 15.
   2. Cast-In-Place Concrete – Division 3.

1.2 SYSTEM DESCRIPTION

A. Performance Requirements
   1. Coordinate connection to fire water main, chilled water return and chilled water supply with Owner's Representative.

1.3 SUBMITTALS

A. Product Data
   1. Furnish submittals for items that are identified in this Section by different typeface and bracketed code (e.g., *Item [L]*). Refer to Division 1 General Requirements for definition of codes for types of submittals and administrative requirements governing submittal procedure. Additional submittal requirements pertaining to this Section are specified under this Article.
   2. Product Options: Drawings indicate size, profiles, and dimensional requirements of piping and specialties and are based on specific system shown.

B. Shop Drawings.

a. Submit fire protection shop drawings as follows:

1) Prepare and submit shop drawings to Underwriter and Registered Design Professional per requirements of Contract Documents.

2) Products with Underwriters Laboratory (UL) Label or Listing in latest issue of UL “Fire Protection Equipment List” and Supplement current as of issue date of this Specification, products with FM Label or Listing in current “Factory Mutual Approval Guide” and approved products and are acceptable materials and equipment.

3) Submit to Registered Design Professional only those shop drawings that have been Underwriter “approved” or “approved as noted”.

C. Quality Assurance/Control Submittals

1. *Test reports [T]:* Submit test data of structural integrity, leakage and performance test.

2. Manufacture’s Instructions

a. Submit Per Division 1, General Requirements, operating and maintenance data, special tools, and spare parts list.

D. Closeout Submittals:

1. Submit as-built drawings and progress prints per Division 1, General Requirements.

1.4 QUALITY ASSURANCE

A. Qualifications

1. Fire protection system work shall be supervised and performed by personnel regularly engaged in installation of fire protection systems per Underwriter’s and NFPA Standards.

2. Underground Cooling Water System work shall be supervised and performed by personnel regularly engaged in the installation of similar systems.

B. Regulatory Requirements:

1. Comply with requirements of utility company supplying water. Include tapping of water mains and backflow prevention.

2. Comply with standards of authorities having jurisdiction for fire-suppression water-service piping, including materials, hose threads, installation, and testing.

C. Certifications

1. Piping materials shall bear label, stamp, or other markings of specified testing agency.

2. Electrical Components, Devices, and Accessories: Listed and labeled as defined in NFPA 70, Article 100, by testing agency acceptable to authorities having jurisdiction, and marked for intended use.

3. Comply with ASTM F 645, “Standard Guide for Selection, Design, and Installation of Thermoplastic Water Pressure Piping Systems”, for selection, design, and installation of thermoplastic water piping.

4. Comply with FM's "Approval Guide" or UL's "Fire Protection Equipment Directory" for fire-service-main products.

5. NFPA Compliance: Comply with NFPA 24 for materials, installations, tests, flushing, and valve and hydrant supervision for fire-service-main piping for fire suppression. Provisions and recommendations of NFPA constitute mandatory minimum requirements for specified work.
6. Owner will make no payment for extra charges for work added in order to comply with NFPA Standards and Owner's Underwriter requirements.

D. Pipe Manufacturer Representation
1. The Contractor shall provide on-site a representation from the cooling water system piping manufacturer to oversee installation of cooling water system.

1.5 DELIVERY, STORAGE, AND HANDLING

A. Preparation for Transport: Prepare valves according to following:
1. Ensure that valves are dry and internally protected against rust and corrosion.
2. Protect valves against damage to threaded ends and flange faces.
3. Set valves in best position for handling. Set valves closed to prevent rattling.

B. Storage: Use precautions for valves according to following:
1. Do not remove end protectors unless necessary for inspection; then reinstall for storage.
2. Protect from weather. Store indoors and maintain temperature higher than ambient dew-point temperature. Support off ground or pavement in watertight enclosures when outdoor storage is necessary.

C. Handling: Use sling to handle valves if size requires handling by crane or lift. Rig valves to avoid damage to exposed parts. Do not use hand wheels or stems as lifting or rigging points.

D. Deliver piping with end caps. Maintain end caps through shipping, storage, and handling to prevent pipe-end damage and to prevent entrance of dirt, debris, and moisture.

E. Protect stored piping from moisture and dirt. Elevate above grade. Do not exceed structural capacity of floor when storing inside.

F. Protect flanges, fittings, and specialties from moisture and dirt.

G. Store plastic piping protected from direct sunlight. Support to prevent sagging and bending. Storage of plastic pipe shall be in accordance with manufacturers guidelines.

1.6 PROJECT CONDITIONS

A. Existing Utilities: Do not interrupt utilities serving facilities occupied by Owner or others unless permitted under the following conditions and then only after arranging to provide temporary utility services according to requirements shown:
1. Notify Owner not less than 2 days in advance of proposed utility interruptions.
2. Do not proceed with utility interruptions without Owner's written permission.

PART 2 PRODUCTS

2.1 MATERIALS

A. General
1. Ells, tees, reducing tees, wyes, couplings, increasers, crosses, transitions and end caps shall be of same Type and Class of materials as pipe, or of equal or greater pressure rating and of equivalent chemical-resistant properties where different materials are proposed and permitted.

B. Type DIWP, Ductile Iron Water Pipe
1. Fire Protection
   a. Ductile Iron Water Pipe: Underground Service. Centrifugally cast, per American National Standards Institute (ANSI)/American Water Works Association (AWWA) C151/A21.51 Class 52 minimum with push-on or mechanical joints per ANSI/AWWA C111/A21.11 with ductile iron fittings, 150 psig pressure rating per ANSI/AWWA C110/A21.10 or C153/A21.53, rubber gaskets with duct tips. CorTen A T-head bolts and nuts for mechanical joints.
2. Cooling water supply (CWS) and cooling water return (CWR).
   a. Ductile Iron Water Pipe: Underground Service. Centrifugally cast, per ANSI/AWWA C151/A21.51 CLASS 52 minimum with restrained joints per ANSI/AWWA C111/A21.11 and with ductile iron fittings, 350 psig pressure rating per ANSI/AWWA C110/A21.10 and C153/A21.53.
3. Ductile Iron Grooved Joint Pipe: Above ground service. Ductile Iron Grooved Joint per ANSI/AWWA C-606. Use CLASS 250 minimum pipe for grooved joint.
4. Ductile Iron Flanged Pipe: Ductile iron flanged pipe per ANSI/AWWA C115/A21.15; and ductile iron fittings, 250-psig pressure rating, per ANSI/AWWA C110/A21.10.
   a. Cement Lining: Cement line pipe and fittings to double the “standard thickness” and seal coat per ANSI/AWWA C104/A21.4.
5. Restrained joints: Use joints that allow deflection and field disassembly. Retainer glands with set screws in pipe surface are strictly prohibited.
   a. American Ductile Iron Pipe Company, Birmingham, AL, “LOK-FAST”.
   b. United States Pipe & Foundry Co., Birmingham, AL, “TR Flex”.
   c. Ebaa Iron Sales, Inc., East Land, TX, “Megalug”.

2.2 COMPONENTS

A. Gate Valves
1. Nonrising-Stem, High-Pressure, Resilient-Seated Gate Valves: AWWA C509, ductile-iron body and bonnet; with bronze or ductile-iron gate, resilient seats, bronze stem, and stem nut.
   a. Minimum Working Pressure: 250 psig (1725 kPa).
   b. End Connections: Mechanical joint.
   c. Interior Coating: Complying with AWWA C550.

2.3 ACCESSORIES

A. Valve Boxes
   1. Valve Boxes: Comply with AWWA M44. Cast iron, screw adjustable, 3-piece, with locking cover having appropriate legend, and 5-1/4-inch shaft. Fully extended length of box shall exceed length required by depth of cover by not less than 4 inches. Provide 1 valve operating wrench.
      a. Tyler Pipe, Tyler, TX.
      b. Opelika Foundry Co., Opelika, AL.

B. Corporation Stop
   1. Corporation Stop: Brass or bronze, ground and lapped key with AWWA C800 inlet threads. Outlet threads shall suit service pipe. Where piping is not being used for electrical grounding, stop shall be insulating type with 90-degree tube flare.
      a. Mueller Co., Decatur, IL.

C. Tapping Valve And Sleeve
   1. Tapping Valve and Sleeve: Valve UL Listed or FM approved, Mechanical Joint Tapping Sleeve, Resilient Wedge Ball Valve, mechanical fit and flanged ends, flange for indicator post if required, tapping fitting and sleeve for line tapping. Provide valve and sleeve with working pressure rated same as pipe service and manufacturer-recommended gaskets, sleeves and glands to ensure complete, watertight connection.
      a. Clow Valve Co., Oskaloosa, IA.
      b. Mueller Co., Decatur, IL.

D. UNDERGROUND STRUCTURES
   1. Type GW, Frame And Cover For Valve Wells:
      a. East Jordan Iron Works, East Jordan, MI, “No. 1040,” Type “A” Solid Cover.
      b. Neenah Foundry Co., Neenah, WI, “R-1642 Solid Lid”.
   2. MANHOLE STEPS:
      a. Ductile iron, per United States Department of Labor Occupational Safety and Health Administration (OSHA) requirements.
         1) Neenah Foundry Co., Neenah, WI.
      b. Stainless steel per local code and OSHA requirements.
      c. Formed steel with plastic jacketed exposed surfaces per local code and OSHA requirements.
      d. Fiberglass reinforced plastic per local code and OSHA requirements.
   3. Precast Components: American Association of State and Highway Transportation Officials (AASHTO) H20/HS20 Loading (16,000 lb wheel loads)
      a. Riser Sections. ASTM C 478, “Standard Specification for Precast Reinforced Concrete Manhole Sections”, with factory formed openings.
      b. Compression Elastomer Joints. ASTM C 443, “Standard Specification for Joints for Circular Concrete Sewer and Culvert Pipe, Using Rubber Gaskets”.
      c. Base. ASTM C 478, “Standard Specification for Precast Reinforced Concrete Manhole Sections”.

d. Flat Slab. ASTM C 478, “Standard Specification for Precast Reinforced Concrete Manhole Sections”.
e. Grade Rings. ASTM C 478, “Standard Specification for Precast Reinforced Concrete Manhole Sections”, reinforced concrete rings totaling thickness from 6 to 9 inches (150 to 229 mm) that coordinate with diameter of frame and cover.

4. Masonry:
   a. Brick. Type MB per ASTM C 32, “Standard Specification for Sewer and Manhole Brick (Made From Clay or Shale)”, Grade MS.
   b. Block. Type CMU per ASTM C 139, “Standard Specification for Concrete Masonry Units for Construction of Catch Basins and Manholes”, formed units to pit diameter with cones battered vertically and horizontally if circular.
5. Leveling Course:
   a. 1:10 ratio cement/sand dry mixture.
6. Plaster Coating:
   a. Cement plaster coating 1/2 inch thick.

E. Cast Iron Fittings: Cast iron, 125 PSI UL Listed, galvanized, screwed, ASTM A 126, “Standard Specification for Gray Iron Castings for Valves, Flanges, and Pipe Fittings”, Grade A, ANSI B16.4.

F. Valves:
   1. Crane Bolingbrook.
   2. Stockham Valves, Paris, TX.

G. Pipe Saddle (Cast/Ductile Iron Pipe). Cast iron tapped for 2-inch NPT, molded rubber gasket, 2 U-bolts.
   1. Mueller Co., Decatur, IL.

H. Pipe Coupling (Steel Pipe). Extra heavy, tapered thread black carbon steel.

2.4 FINISHES

A. Bituminous Coating:
   1. Carboline, Zenia, OH, “Bitumastic 50”.
   2. International Paints Houston, TX, “Intertuf 100”

B. Joint Packing:
   1. Tarred oakum or jute per Fed. Spec. A-A-1186, Type II.

C. Sleeves: Standard weight carbon steel pipe with continuously welded collar plates, hot-dip galvanized after fabrication.

D. Expansible Seal: Mechanically-expansible elastomer seal devices with stainless steel hardware.
   1. PSI Thunderline Corp., Houston, TX “Link Seal”.
   2. Calpico, Inc., San Francisco, CA, “Sealing Linx”

E. Rods and Clamps:
   1. Rods and clamps for thrust restraint shall be hot-dipped galvanized carbon steel with non-embedded portions coated per NFPA requirements with BITUMINOUS COATING.

F. Gasket Joint Lubricant:
   1. Use either pipe manufacturer's recommended gasket lubricant or hydrated bentonite gel applied per manufacturer's instructions as joint lubricant.
      a. Colloid Environmental Technologies Company, Arlington Heights, IL, "Volclay".

G. Epoxy Bonding Compound: 2-component system suitable for bonding wet or dry concrete to each other and to other materials.
   1. Euclid Chemical Co., Cleveland, OH, "Epoxy NO. 452".
   2. Tamms, Kirkland, IL, "Duralbond"
   3. Sika Corp., Lyndhurst, NJ, "Sikadur 32 Hi-Mod".

H. Embedment (Bedding and Initial Backfill). Refer to Section 02057 for definitions of soils and aggregates, their uses and installation methods.

I. Concrete. Compressive strength of 3000 psi per ACI 301 and ASTM C 94, "Standard Specification for Ready-Mixed Concrete".

J. Thermal-Joining Filler Metal:
   1. Solder (hard). Tin-antimony "95-5 hard solder"; ASTM B 32, "Standard Specification for Solder Metal".
   2. Brazing Alloy. Silver solder per American Welding Society (AWS) A5.8-77 Classification BCu P-5. Use of brazing alloy containing cadmium is prohibited.

K. Epoxy Grout (Premixed, Nonshrink Type):
   1. Great Lakes Industrial Supply, Dearborn Heights, MI, "Unisorb V100"
   2. Master Builders Technologies, Cleveland, OH, "Ceilcote 648 Series".
   3. Tamms, Kirkland, IL, "Polygrout"

L. Marking Tape: Service identified 3 inch wide, blue color foil-backed polyethylene tape, or non-foil tape. Fire water service.
   1. Reef Industries, Inc., Houston, Texas, "Terra Tape".
   2. Seton Identification Products, Branford, CT.
   3. Thor Enterprises, Sun Prairie, Wisconsin.

M. Chlorine Solution for Disinfection Work. Chlorine solution of not less than 50 parts per million (PPM) of chlorine obtained from chlorine gas, calcium hypochlorite or commercial laundry bleach with minimum 5.25 percent available chlorine.
   1. Calcium Hypochlorite:
      a. Olin Chemicals Groups, Norwalk, CT, "HTH".
      b. Ashland Chemical Inc., Columbus, OH.
      c. Mutchler Chemical Co., Inc., Westwood, NJ.

2. Material Required For 1000 Gallons Of Solution

SOLUTION STRENGTH	50 PPM	100 PPM
CALCIUM HYPOCHLORITE (LBS)	0.6	1.2
LAUNDRY BLEACH (GALLONS)	1.0	2.0

PART 3 EXECUTION

3.1 GENERAL

A. The following construction methods are not intended to be completely detailed. Provide properly functioning systems per applicable codes, manufacturer's instructions and standards and best accepted safe practice of Trade.

3.2 EXISTING UTILITIES AND SERVICES

A. General
   1. Refer to Earthwork – Division 2.

B. New Connections
   1. Make complete connections to new or existing structures. Repair damage caused as result of Work. Repair work to comply with Contract Documents at no increase in Contract sum.

3.3 PIPING EARTHWORK

A. Excavation And Backfill
   1. Perform excavating and backfilling required for Work, per procedures specified in Soils and Aggregates Division 2, and Earthwork - Division 2 and the following requirements.
   2. Trim to lines and elevations in manner specified under Embedment. Embedment starts at final trimmed trench elevation and ends at 12 inches above top of pipe or component; "Backfill" starts 12 inches above pipe or component. Use manual methods in areas adjacent to buried construction and utilities to avoid damage or unscheduled service interruption. Limit trench width or embankment conditions to preclude excessive earth loads on installed piping system.

B. Embedment (Bedding And Initial Backfill)
   1. Trim rough trench to subgrade and provide embedment as defined in Soils and Aggregates-Division 2 and as shown. Provide stable, uniform support consisting of minimum compacted thickness below bottom of exterior surface of pipe, including bell, as shown but in no case less than 4 inches. Shape bedding to provide full length barrel support and to prevent point loading at pipe joints. Place and compact per Division 2, Soils and Aggregates.
   2. When bottom of excavation cannot support pipe, excavate to further depth and width and refill to pipe laying grade with bedding material per Division 2, Soils and Aggregates.

3.4 PIPING INSTALLATION

A. General
   1. Install per NFPA 24 and ANSI/AWWA C600.
   2. Before lowering pipe into trench, clean, and visually inspect for apparent defects. Remove defective pipe from site promptly. Before and during laying of pipe, maintain excavations dry and clear of water and extraneous materials. Provide minimum 4 inches of clearance in directions for pipe passing under or through building grade beams.
   3. Where pipe is embedded in an underground concrete structure, provide joint within 18 inches of exterior surface of structure, capable of absorbing deflection without leakage.
   4. Clean and lubricate elastomer joints before assembly.
   5. Coat ferrous joints including bolts, nuts, flanges, and like with Bituminous Coating.
   6. During progress of construction, protect open ends of 18 inch and smaller pipe, fittings, and valves to prevent admission of foreign matter. Place plugs or flanges in ends of installed work whenever work stops. Plugs shall be commercially manufactured products.
   7. Interface with aboveground systems within building limits as shown or specified. Provide accessories for flushing, disinfecting and testing. Provide blind flange at interface.

B. Joint Construction
   1. Make pipe joints according to the following:
      a. Ductile-Iron Piping, Gasketed Joints for Water-Service Piping: AWWA C600 and AWWA M41.
      b. Ductile-Iron Piping, Gasketed Joints for Fire-Service-Main Piping: UL 194.
      c. Ductile-Iron Piping, Grooved Joints: Cut-groove pipe. Assemble joints with keyed couplings, gaskets, lubricant, and bolts according to coupling manufacturer's written instructions.
      d. Dissimilar Materials Piping Joints: Use adapters compatible with both piping materials, with OD, and with system working pressure. Refer to Utility Materials – Division 2 for joining piping of dissimilar metals.

C. Changes In Alignment
   1. Make horizontal or vertical changes in alignment using standard fittings intended for angular changes. Incremental changes less than or between standard fittings may be made by deflecting pipe joints with deflection not more than 1/2 maximum deflection recommended by manufacturer.

D. Restraint
   1. Provide restraint or anchorage for pipe and fittings as shown, or where required to restrain each system under test pressure and normal operating pressure. Where provisions are not shown, provide restraint per NFPA 24.
   2. Provide rods and clamps as shown. Also provide rods and clamps elsewhere for additional anchorage and construction conditions to supplement, but not to be substituted for, anchorage shown.

3. Where rods and clamps or restrained joints are used, restrain each leg the following minimum length, or to next restrained leg:

Nominal Pipe Diameter (Inches)	Length of Restrained Leg (Feet)
3	40
4	50
6	60
8	80
10	100
12	120
Over 12	See Profiles (CE-06)

4. Paint joints (bolts, nuts, flanges and fittings) and rods with heavy bituminous coating. See Section 96 of NFPA No. 24. Use of mechanical joints utilizing retainer gland with set screws in pipe surface is prohibited.
5. Provide thrust blocks where necessary to absorb hydraulic thrust at caps, plugs and at system change of direction fittings. Furnish 2500-psi minimum strength concrete placed against undisturbed soil with an area sufficient to provide load transmittal without movement.

E. Type DIWP, Ductile Iron Water Pipe
1. Install per AWWA C600 and AWWA M41.
2. Provide necessary special fittings and clamps for anchorage, socket clamping, rods, piers, bases, anchors and thrust blocking, off-sets, tees, crosses, dead-ends, and connection transitions.
3. Install polyethylene encasement per ANSI/AWWA C105/A21.5
4. Install ball joint per manufacturer's instructions. After testing, coat ball joint with Bituminous Coating, and wrap with plain mineral wool blanket held in place with approved tape or wire.

F. Epoxy Bonding To Existing Materials
1. Use Epoxy Bonding Compound to set sleeves or pipes in existing concrete or to bond dissimilar materials.
2. When applied per manufacturer's instructions, compounds shall be capable of initial curing within 48 hours at temperatures as low as 40 degF and shall be capable of bonding any combination of the following properly prepared materials. Wet or dry, cured or uncured concrete or mortar; vitrified clay; cast iron, and carbon steel.

G. VALVE INSTALLATION

H. Valve And Box
1. Provide valve and box as shown. Coat underground portions of valve and box with Bituminous Coating before installation. Coat uncoated or marred surfaces including bolts before backfilling. Install valve and box.

I. AWWA Gate Valves: Comply with AWWA C600 and AWWA M44. Install each underground valve with stem pointing up and with valve box.

J. UL/FM Gate Valves: Comply with NFPA 24. Install each underground valve and valves in vaults with stem pointing up and with vertical cast-iron indicator post.

K. Corporation Valves and Curb Valves: Install each underground curb valve with head pointed up and with service box.

L. Relief Valves: Install aboveground with shutoff valve on inlet.

M. Surface Penetrations
   1. Provide where piping passes through floors and concrete or masonry walls.
   2. Where penetrations are placed in existing concrete or masonry, utilize core drills diameter and secure sleeves watertight with Epoxy Bonding Compound. Do not load sleeves without approval of Registered Design Professional.
   3. Provide "Expansible Seal Device" as shown.
   4. Pack annular space full depth with mastic filler to provide liquid tight seal.

N. Underground Structures
   1. Gate Wells
      a. Provide as shown and per requirements of Cast-in-Place Concrete – Division 3.
   2. Air Release Assembly
      a. Provide, where shown, an air release assembly consisting of pit, pit cover, piping, pipe saddle, isolating valve and air release valve. Bituminous coat pipe saddle after installation.

3.5 FIELD QUALITY CONTROL

A. General
   1. Test equipment per manufacturer's published instructions, NFPA and as specified for system.

B. Piping Systems Testing
   1. Test piping systems per NFPA 24, applicable governing codes, including State, local or insurance codes, and requirements of Owner's insuring agency.
   2. Provide necessary equipment and materials and make necessary test connections required to properly execute tests. Tests shall be witnessed by Registered Design Professional and authorized inspectors (or representatives) having jurisdiction, who shall be timely notified by Contractor to insure their being present during testing.
   3. Perform tests before piping is painted or concealed. Do not apply hydrostatic tests to piping with concrete thrust blocking which has not cured for more than 7 days. Hydrostatic test pressure forces shall not exceed design rating of thrust blocking. Backfill underground piping to degree necessary to preclude movement.
   4. Immediately correct defects discovered during tests and retest systems to complete satisfaction of Registered Design Professional and inspectors (or representatives) authorized to approve piping installation. Correct any piping system, or any portion thereof, which does not conform to best current installation practices of trade. Required corrections shall be at no additional cost to Owner.

C. Flushing Work

1. Contractor does testing with Owners insurer, Owners representative, or Registered Design Professional present to verify flushing and testing.
2. Before hydrostatic testing of new underground piping, devices and lead-ins shall be flushed at maximum flow rate that can be achieved. Flushing shall begin at closest point to water supply connection. Flush rate shall be recorded and maintained as part of Contractor's documentation and certification process. Flushing shall take place on following items in the following manner:
   a. Devices: Each device shall be flushed by attaching not less than two 2 ½-inch hoses to the device. Each device shall be flowed at maximum rate available and long enough to insure clean, clear water has been obtained from each device. Appropriate reading shall be taken before closing and moving to next device.
   b. Lead-in: Each lead-in shall be flushed by attaching not less than two 2 ½-inch hoses to lead-in. Each lead-in shall be flowed at maximum rate available and long enough to insure clean, clear water has been obtained from each lead-in.
   c. Loop: Loop shall be flushed after devices and lead-ins have been flushed. Loop shall flow at working pressure long enough to insure clean, clear water has flowed from point of supply to outlet being flowed.
3. Provide temporary and permanent piping, equipment and materials required for flushing work. Coordinate cleaning of connections to existing systems with Registered Design Professional.
4. If equipment and piping systems are not properly cleaned and flushed, pay for resultant damage, necessary cleaning and flushing of systems to which connection was made and subsequent inspection, at no increase in Contract Sum.
5. Flush and drain dead ends.
6. Dispose of flushing water per governing codes and regulations.

D. Flow Test

1. Each lead-in shall have flow test performed.
2. Furnish equipment to verify flow rate of:

Pipe Size	Flow Rate
4-inch	390 GPM
6-inch	880 GPM
8-inch	1560 GPM
10-inch	2440 GPM
12-inch	3520 GPM

3. Do flow tests, record pitot readings and furnish readings to Approval Authority.

E. Hydrostatic Test

1. Underground pipe, devices and lead-ins shall be hydrostatically tested using following procedure:
   a. Meet with Approval Authority before test to review areas to be tested and procedure that shall be followed.
   b. Provide calculated allowable leakage documentation based on number of joints and hydrants being tested before hydrostatic test of underground system.

c. Gauges shall be in place on pump up device and at most remote devices as minimal requirements.
d. Piping and devices shall be pressurized to either 200 psi, or 50 psi above standard working pressure, whichever is greater.
e. When piping and devices have been brought to appropriate pressure, pumping devices shall be disconnected from underground, gauges marked as to pressure achieved and record time it was achieved.
f. Course of underground shall be walked to ensure that valves and devices are in appropriate position (open/closed), as previously reviewed with Contractor.
g. Physically verify that valves are in appropriate and designated position during this walk through.
h. Underground systems shall remain pressurized for 2 hours.

F. Verification of Volume Loss
1. Provide calculated allowable leakage documentation based on number of joints and hydrants being tested before hydrostatic test of underground system.
2. When hydrostatic test has been completed, pressure pump shall be reconnected and measured water volume shall be pumped back into system to bring system pressure back to its initial pressure. (This is based upon pressure loss during 2-hour test period).
3. Measured quantity pumped back into systems shall not exceed calculated allowable leakage per NFPA 24. If actual quantity exceeds allowable leakage, test is not acceptable.
4. Relieve the pressure on system and verify that gauges return to zero.
5. Test calculations and appropriate certificates are to be filled out, completed, and forwarded to appropriate parties.
6. Full flow volume tests are required upon completion of hydrostatic test of underground loops. Total volume flow required is found in Chapter 9 of NFPA 24.

G. Disinfection Work
1. General
a. Under direction of Registered Design Professional, disinfect potable water systems, fire protection systems and extension from existing systems connections, with an approved chlorine solution as specified, before system acceptance in accordance with applicable codes. Apply chlorinated solution at point of line origin nearest to existing chlorinated supply.
2. Procedures
a. Line being disinfected shall stand for minimum of 24 hours. Disinfecting solution shall produce no less than 10 parts per million chlorine residual at extreme end of line at end of retention period. After 24 hours flush out disinfecting solution until combined available chlorine residual is less than 1 parts per million. Maintain flushing velocity at 6 feet per second, unless higher velocities were achieved in previous flushing and unless otherwise approved.
b. Bacteriological count shall be made by Department of Public Health; if count is within United States Public Health Service recommendations and local code requirements, system may be put into service. Repeat disinfection process until specified results are obtained.

c. Thoroughly disinfect pipe, valves, cocks, fittings, hoses, containers and miscellaneous items used for connection of new piping to an existing facility, immediately before installation. Clean and disinfect materials involved with solution containing not less than 2000 parts per million available chlorine and flushed with potable, i.e., disinfected water. A 2000 parts per million chlorine solution may be obtained by mixing 1 gallon of commercial laundry bleach per 25 gallons of water. Preclude contamination of disinfected materials before installation.

3. *TEST REPORTS [T]*
   a. Submit copies of bacteriological tests including acceptance by authorities having jurisdiction.

H. General Piping Systems Testing Requirements
1. Before acceptance of Work, test piping systems in presence of Registered Design Professional and authorities having jurisdiction per respective and applicable governing codes and requirements of this Section. Backfill to extent required to prevent movement.
2. Provide necessary equipment and materials and make necessary test connections required to properly execute tests.
3. Use only potable water for hydrostatic testing.
4. Obtain water from point(s) designated by Registered Design Professional. Promptly remove temporary connections upon completion of testing or when directed by Registered Design Professional.
5. Prepare and maintain records of piping systems tests. Record Registered Design Professional and Contractor personnel responsibilities, dates, test gage identification numbers, ambient temperature, pressure ranges, rates of pressure drop and leakage rates.
6. Connection between new underground piping and existing shall be separately tested. Operating pressure shall be maintained on joint for not less than 30 minutes without leakage.
7. Bleed off air from hydrants and systems high points.
8. If testing shows leakage rates greater than specified limits, determine source(s) of leakage, repair or replace defective materials or and workmanship with new materials or workmanship. Retest installation until testing shows compliance with specified requirements.

I. Cooling Water (CWR and CWS)
1. Test per AWWA C600 except that minimum test pressure shall be 150 psig.

J. Fire Protection Water (FW) Testing
1. Test per NFPA 24.

K. IDENTIFICATION
1. Install continuous underground detectable warning tape during trench backfilling for underground non-metallic water-service piping. Locate tape below finished grade, directly over piping. See Section 2.14.L for underground warning tapes.
2. Permanently attach equipment nameplate or marker, indicating plastic water-service piping, on main electrical meter panel.

L. CLEANING AND FINISHING

1. Upon completion of work in each respective area, clean and protect work. Just before final acceptance, perform additional cleaning to provide clean equipment and areas to Owner.

END OF SECTION

Revision History	
Date	**Rev. No.**
A	0
B	0
C	0
D	0
E	0
F	0
02-19-09	0

SSK/djo
C:\D\TIMSDATASF\BROOKHAVEN_NATIONAL_LABORATORY\SF070003\200-PROJEXEC\280-SPEC\02510.DOC

THIS PAGE INTENTIONALLY LEFT BLANK

SECTION 02530

SANITARY SEWERAGE

PART 1 GENERAL

1.1 SUMMARY

1. Section Includes:
   a. Work for each system includes design and location of system, connections to existing work, required components, related earthwork, structures, concrete work and testing, necessary to provide complete, functioning systems.
   b. Work required to provide properly functioning systems per applicable codes, manufacturer's instructions and standards and best accepted safe practice of Trades.
2. Sanitary Drainage (SAN)
   a. Type CISP, Cast Iron Soil Pipe where indicated.
   b. Type PVC-PSM Polyvinyl Chloride Sewer Pipe from 5 feet outside building perimeters for sizes up to and including 15inches diameter.
   c. Type RCP, Reinforced Concrete Pipe from 5 feet outside building perimeters for piping over 12 inches except as shown.
   d. Type DIWP, Ductile Iron to be used for force mains in pumping stations and valve pits.
3. Sanitary Drainage Force Main (San-F)
   a. Type BCS-PS, Black Carbon Steel-Polyethylene Sheathed.

B. Related Sections:
1. Submittals - Division 1 General Requirements.
2. Site Demolition - Division 2.
3. Earthwork other than that specified in this section - Division 2.
4. Soils and Aggregates – Division 2.
5. Water Distribution - Division 2.
6. Cast-In-Place Concrete other than that specified in this section – Division 3.
7. Riprap. Refer to Division 2, Soils and Aggregates.

1.2 REFERENCES

A. Reference Sections
1. Geotechnical Data.

B. ASTM
1. ASTM A 674 "PE Encasement for Ductile-Iron Piping:"
2. ASTM A 74, "Standard Specification for Cast Iron Soil Pipe and Fittings"
3. ASTM C 139, "Standard Specification for Concrete Masonry Units for Construction of Catch Basins and Manholes"
4. ASTM C 32, "Standard Specification for Sewer and Manhole Brick (Made From Clay or Shale)"

5. ASTM C 443, “Standard Specification for Joints for Circular Concrete Sewer and Culvert Pipe, Using Rubber Gaskets”
6. ASTM C 478, “Standard Specification for Precast Reinforced Concrete Manhole Sections”
7. ASTM C 497, “Standard Test Methods for Concrete Pipe, Manhole Sections, or Tile”
8. ASTM C 507, “Standard Specification for Reinforced Concrete Elliptical Culvert, Storm Drain, and Sewer Pipe”
9. ASTM C 564, “Standard Specification for Rubber Gaskets for Cast Iron Soil Pipe and Fittings”.
10. ASTM C 76, “Standard Specification for Reinforced Concrete Culvert, Storm Drain, and Sewer Pipe”
11. ASTM C 877, “Standard Specification for External Sealing Bands for Concrete Pipe, Manholes, and Precast Box Sections”
12. ASTM C 94, “Standard Specification for Ready-Mixed Concrete”
13. ASTM D 2321, “Standard Practice for Underground Installation of Thermoplastic Pipe for Sewers and Other Gravity-Flow Applications”
14. ASTM D 3034, “Standard Specification for Type PSM Poly (Vinyl Chloride) (PVC) Sewer Pipe and Fittings”
15. ASTM F 477, “Standard Specification for Elastomeric Seals (Gaskets) for Joining Plastic Pipe”

C. AWWA
1. AWWA C104
2. AWWA C105
3. AWWA C110
4. AWWA C111
5. AWWA C115
6. AWWA C151 CLASS 350

1.3 SUBMITTALS

A. Furnish submittals for items that are identified in this Section by different typeface and bracketed code (e.g., *Item [L]*). Refer to Division 1 General Requirements, for definition of codes for types of submittals and administrative requirements governing submittal procedure. Additional submittal requirements pertaining to this Section are specified in this section under this Article.

B. Product Data
1. *Product Data [P]:* Include materials and equipment classification and identification, required supports, and special installation requirements.

C. Samples
1. [S]: Submit typical precast components for underground structures; do not submit specific configurations of each structure.

D. Quality Assurance/Control Submittals
   1. *Test reports [T]*: Submit structural integrity, leakage and performance test data.

E. Closeout Submittals
   1. Submit as-built drawings per Division 1, General Requirements.

1.4 QUALITY ASSURANCE

A. Regulatory Requirements

1.5 DELIVERY, STORAGE, AND HANDLING

A. Store and protect plastic pipe to prevent ultraviolet deterioration and to minimize bowing.

PART 2 PRODUCTS

2.1 MATERIALS

A. Ells, tees, reducing tees, wyes, couplings, increasers, crosses, transitions and end caps shall be of same Type and Class of materials as pipe, or of material having equal strength and chemical resistance properties.

B. Type CISP, Cast Iron Soil Pipe
   1. Hub and spigot: Per ASTM A 74, “Standard Specification for Cast Iron Soil Pipe and Fittings”, coated inside and outside with coal tar enamel. Pipe with eccentrically cast, thin walls will not be accepted.
   2. Elastomer gaskets. Single pipe weight use, per ASTM C 564, “Standard Specification for Rubber Gaskets for Cast Iron Soil Pipe and Fittings”.

C. Type RCP, Reinforced Concrete Pipe
   1. Pipe and fittings: Include modified tongue and groove joints, per ASTM C 76, “Standard Specification for Reinforced Concrete Culvert, Storm Drain, and Sewer Pipe”, Class III or as shown. Stencil class identification inside bore of pipe and fittings. Elliptical reinforcement in circular pipe is not acceptable.
   2. Compression elastomer joints. Per ASTM C 443, “Standard Specification for Joints for Circular Concrete Sewer and Culvert Pipe, Using Rubber Gaskets”. Provide neoprene elastomer for services related to building drainage.

D. Type PVC-PSM, Polyvinyl Chloride Sewer Pipe
   1. Pipe, fittings and jointing materials: Per ASTM D 3034, “Standard Specification for Type PSM Poly (Vinyl Chloride) (PVC) Sewer Pipe and Fittings”, SDR 35 with elastomer gasket joints per ASTM F 477, “Standard Specification for Elastomeric Seals (Gaskets) for Joining Plastic Pipe”.

E. Type BCS-PS, Black Carbon Steel Polyethylene Sheathed
   1. Pipe: Per ASTM A 53, Buttwelded, ERW or Seamless, Schedule 40 in sizes through 12 inches.
   2. Buttweld fittings: Black carbon steel per ASTM A 234 and ANSI B16.9, wall thickness to match pipe wall.
   3. Slip-on or weld neck flanges: Forged steel per ASTM A 181, Grade 1 or 2, ANSI B16.5.
   4. *Polyethylene sheath [D]:* Per FS L-C-530 C and AWWA C-215, with heat shrunk sleeves or manufacturer's standard tape wrapping for butt joints and fittings. Manufacturer:
   5. Bredero Shaw, "Pritec".

F. Piping Transitions: Provide for joining of different types of pipe materials different pipe sizes, and cut pipe, where approved. Fabricate transitions with materials capable of resisting normal corrosion.
      a. Can-Tex Industries Division of Harsco Corp. "CT-Adapters".
      b. Fernco Joint Sealer Co. "PVC Donut".
      c. Joints, Inc. "Caulder".

G. Type DIWP, Ductile Iron Pipe:
   1. Ductile Iron Water Pipe: Underground Service. Centrifugally cast, per American National Standards Institute (ANSI)/American Water Works Association (AWWA) C151/A21.51 CLASS 350 minimum with push-on or mechanical joints per ANSI/AWWA C111/A21.11 with ductile iron fittings, 350 psig pressure rating per ANSI/AWWA C110/A21.10 or C153/A21.53, rubber gaskets with duct tips. Cor-Ten A T-head bolts and nuts for mechanical joints.
   2. Ductile Iron Flanges Pipe: Pit Service. Ductile iron flanged pipe per ANSI/AWWA C115/A21.15; and ductile iron fittings, 250-psig pressure rating, per ANSI/AWWA C110/A21.10.
   3. Cement Lining: Cement line pipe and fittings to "standard thickness" and seal coat per ANSI/AWWA C104/A21.4.
   4. Restrained joints: Use joints that allow deflection and field disassembly. Retainer glands with set screws in pipe surface are strictly prohibited.
      a. American Ductile Iron Pipe Company, Birmingham, AL, "LOK-FAST".
      b. United States Pipe & Foundry Co., Birmingham, AL, "TR Flex".
      c. Ebaa Iron Sales, Inc., East Land, TX, "Megalug".
   5. PE Encasement for Ductile-Iron Piping: ASTM A 674 or AWWA C105, PE film, 0.008-inch (0.20-mm) minimum thickness, tube or sheet.

2.2 MANUFACTURED UNITS

A. VALVES
   1. Flap Valves: Cast iron flap and flush valve. Frame and lid with hub connection. Bronze mounted and fitted with lifting chain of length to suit depth of pit or structure.
      a. Neenah R-5040-B Series.
      b. Clow F-3016.
   2. Shear Gate: Cast iron shear gate:
      a. Clow F-3004.

b. Neenah R-5005-B Series.

3. Sluice Gate: Cast Iron. Light service, flush bottom closure, size as shown with tracks, gate, handwheel and rod.
   a. Rodney Hunt HYQ-240L with Type S-2500 handwheel.

B. CASTINGS
1. Sanitary manhole frame and cover:
   a. Neenah R-1642 with Type B solid cover.
   b. East Jordan Iron Works No. 1040 with Type A solid cover.
2. Provide each manhole cover with lettering identifying respective service: “SANITARY”.
3. Manhole steps:
   a. Ductile iron, 16 inches wide.
      1) Neenah R-1980-M.
   b. Stainless steel per local code and OSHA requirements.
   c. Formed steel with plastic jacketed exposed surfaces per local code and OSHA requirements.
   d. Fiberglass reinforced plastic per local code and OSHA requirements.

C. Precast Manholes
1. General. Use HS-20 live load for design purposes.
2. Precast Concrete Manholes:
   a. Grade Rings. ASTM C 478, “Standard Specification for Precast Reinforced Concrete Manhole Sections”, reinforced concrete rings with total thickness from 6 to 9 inches (150 to 229 mm) that coordinate with diameter of frame and cover.
   b. Top or Cone Section. ASTM C 478, “Standard Specification for Precast Reinforced Concrete Manhole Sections”, eccentric cone, concentric cone, or flat slab top as shown on drawings. Coordinate cone diameter with grade ring diameter.
   c. Riser Sections. ASTM C 478, “Standard Specification for Precast Reinforced Concrete Manhole Sections”, with factory formed openings and installed steps.
   d. Base. ASTM C 478, “Standard Specification for Precast Reinforced Concrete Manhole Sections”.
   e. Flat Slab. ASTM C 478, “Standard Specification for Precast Reinforced Concrete Manhole Sections”.
   f. Manhole Tee Section. ASTM C 76, “Standard Specification for Reinforced Concrete Culvert, Storm Drain, and Sewer Pipe”, Class IV minimum (Class V if required to match adjacent pipe) with joints to match adjacent pipe.
3. Manhole Joints: Compression Elastomer Joints, ASTM C 443, “Standard Specification for Joints for Circular Concrete Sewer and Culvert Pipe, Using Rubber Gaskets”.

2.3 COMPONENTS

A. Manhole Masonry:
1. Brick. Type MB per ASTM C 32, “Standard Specification for Sewer and Manhole Brick (Made From Clay or Shale)”, Grade MS.

2. Block. Type CMU per ASTM C 139, “Standard Specification for Concrete Masonry Units for Construction of Catch Basins and Manholes”, formed units to structure diameter with cones battered vertically and curved horizontally if circular.

B. Leveling Course:
1. 1:10 ratio cement/sand dry mixture.

C. Plaster Coating:
1. Cement plaster coating 1/2 inch thick.

D. Pipe:

2.4 ACCESSORIES

A. Flexible joint material for use at joint between pipe and manhole.
1. Res-Seal
2. Link-Seal
3. Press Wedge II

B. Wall Pipes: Cast iron. Class D, bell and flange or flange and plain end.
1. Clow F-1424 or F-1426.
2. American Cast Iron Pipe.
3. United States Pipe & Foundry Co.

C. P-Trap: Extra heavy cast iron for connection to Type CISP piping.
1. Josam.
2. Smith.
3. Tyler Pipe.
4. Zurn.

2.5 MISCELLANEOUS MATERIALS

A. Bituminous coating:
1. Koppers “Bitumastic 50”.
2. Porter Coatings Division of Porter Paint Co. “Tarmastic 101”.

B. Gasket Joint Lubricant. Pipe manufacturer’s recommended gasket lubricant.

C. Epoxy Bonding Compound. 2-component system suitable for bonding wet or dry concrete to each other and to other materials.
1. Copolymer Chemicals, Inc., Detroit, MI. “Crete-Tac”.
2. H. B. Fuller Co., St. Paul, Minn. “BC-013-14”.
3. W. R. Grace Co., A. C. Horn Products, Chicago, IL., “Thiopoxy-63”.

D. Embedment (bedding and initial backfill). Refer to Division 2, Soils and Aggregates.

E. Concrete: Compressive strength of 3000 PSI at 28-days, per ASTM C 94, “Standard Specification for Ready-Mixed Concrete”, with 5-7 percent entrained air.

F. Marking tape. Service identified 3-inch wide, brown color foil-backed polyethylene tape, or non-foil tape.
   1. Reef Industries, Inc., “Terra Tape”, Houston, Texas.
   2. Seton Co., New Haven, Connecticut.
   3. Thor Enterprises, Sun Prairie, Wisconsin.

G. Exterior cleanout
   1. Josam Series 56050.
   2. Zurn No. Z-1450-1.

H. Interior underdrain cleanout:
   1. Refer to Division 15, Plumbing Fixtures and Equipment.

2.6 FINISHES

A. Shop coat ferrous metal surfaces with “Bituminous Coating”, except where other equivalent types of protective coatings are manufacturer’s standard.

B. Manhole Coating
   1. Provide drainage pit with Manhole Coating System applied as follows:
      a. Brush blast surfaces before application of coal tar epoxy.
      b. Reinforce pit corners with layers of 12, 8, and 4 inch wide strips of closely woven, oil-free glass cloth embedded in successive layers of coal tar epoxy.
      c. Each coat of coal tar shall be 8 mils thick. Apply each successive phase of work involving coal tar epoxy within 24 hours.

C. Manhole coating system. 3-coat, 24-mil thick system of coal tar epoxy and fibrous glass cloth.
   1. Ameron “Amercoat No. 78 HB”.
   2. Carboline “Carbomastic No. 15”.
   3. Pitt Chem “Tar Set”.

2.7 SOURCE QUALITY CONTROL

A. At discretion of Owner and at Owner’s expense crushing strength of RCP may be tested per ASTM C 497, “Standard Test Methods for Concrete Pipe, Manhole Sections, or Tile”.

B. One half of 1 percent of number of pipe sections of each pipe size and type to be installed may be selected by Owner for testing. Test at least 2 pipes in each size and type. Failure to meet tests may be cause for rejection of entire lot of pipe.

PART 3 EXECUTION

3.1 PREPARATION

A. Excavation And Backfill
   1. Perform excavating and backfilling required for Work, per procedures specified in Division 2, Soils and Aggregates, and Site Demolition and the following requirements.
   2. Trim to lines and elevations in manner specified under Embedment. Embedment starts 4-inches below bottom of pipe elevation and ends 12 inches above top of pipe or component; "Backfill" starts 12 inches above pipe or component. Use manual methods in areas adjacent to buried construction and utilities to avoid damage or unscheduled service interruption. Limit trench width or embankment conditions to preclude excessive earth loads on installed piping system.

B. Embedment (Bedding And Initial Backfill)
   1. Trim rough trench to subgrade and provide embedment as defined in Division 2, Soils and Aggregates and as shown. Provide stable, uniform support consisting of minimum compacted thickness below bottom of exterior surface of pipe, including bell, as shown but not less than 4 inches. Shape bedding to provide full length barrel support and to prevent point loading at pipe joints. Place and compact per Division 2, Soils and Aggregates.
   2. When bottom of excavation cannot support pipe, excavate to further depth and width and refill to pipe laying grade with bedding material per Division 2, Soils and Aggregates.

C. Pipe
   1. Before lowering pipe into trench, clean and visually inspect for apparent defects. Remove defective pipe from site promptly. Before and during laying of pipe, maintain excavations dry and clear of water and extraneous materials. Provide minimum 4 inches of clearance for pipe passing under or through building grade beams or provide surface penetrations as shown.

3.2 INSTALLATION

A. Pipe
   1. Where pipe is embedded in an underground concrete structure, provide joints within 12 inches of exterior surface of structure, capable of absorbing movement without leakage.
   2. Clean and lubricate elastomer joints before assembly. Check recessed gaskets with feeler gages.
   3. During progress of construction, protect open ends of 18 inch and smaller pipe, fittings to prevent admission of foreign matter. Place plugs or end boards in ends of installed work whenever work stops. Plugs shall be commercially manufactured products.
   4. Type CISP, Cast Iron Soil Pipe
      a. Install per CISPI Cast Iron Soil Pipe and Fittings Handbook except as modified by Contract Documents.
      b. Provide lead and oakum joints in vertical piping or where rigid joint alignment is required or where floor drains are caulked. Make joints with 1 pouring of molten lead,

calked to produce liquid-tight joints without stressing hub or spigot. Where lead is driven 1/4 inch or more below face of hub, remove lead and remake joint.

5. Type RCP, Reinforced Concrete Pipe
    a. Install per ACPA Concrete Pipe Installation Manual except as modified by Contract Documents.
    b. Method of field tapping for branch connections is subject to approval by Registered Design Professional. Use “Epoxy Bonding Compound” to join cleaned piping and wet or dry cement.
    c. Do not install pipe with chipped or otherwise damaged joint areas.
6. Type PVC-PSM, Polyvinyl Chloride Sewer Pipe
    a. Install per ASTM D 2321, “Standard Practice for Underground Installation of Thermoplastic Pipe for Sewers and Other Gravity-Flow Applications”, except as modified by Contract Documents.
    b. At no point shall completed installations have out-of-round pipe deflections greater than 7 1/2 percent. Registered Design Professional may require deflectometer or go/no-go gauging tests run on pipeline acceptance. Remove and replace pipe that has deflected more than 7-1/2 percent per ASTM D 3034, “Standard Specification for Type PSM Poly (Vinyl Chloride) (PVC) Sewer Pipe and Fittings”. Test pipe for deflection not less than 30 days following completion of installation.
7. Type BCS-PS, Black Carbon Steel-Polyethylene Sheathed
    a. Provide welded assembly with welding work per ANSI B31.1, except where flanged or threaded components are provided.
    b. Remove damaged polyethylene sheathing and replace with heat-shrinkable sleeves set in fresh adhesive primer.

B. Special Techniques
1. Epoxy Bonding To Existing Materials
    a. Use Epoxy Bonding Compound to set sleeves or pipes in existing concrete or to bond dissimilar materials.
    b. Bonding Compound, when applied per manufacturer’s instructions, shall be capable of initial curing within 48 hours at temperatures as low as 40 degF and shall be capable of bonding any combination of following properly prepared materials. Wet or dry, cured or uncured concrete or mortar; vitrified clay; cast iron, and carbon steel.
2. Jacking Of Pipe
    a. Do not jack pipe in place except upon prior approval of proposed materials and complete details of methods.
3. Concrete Work
    a. Perform concrete work per ACI and to details shown, including reinforcing.

3.3 CONSTRUCTION

A. Interface with Other Work
1. Adjusting Existing Structure Top Elevation
    a. Adjust top elevations of manholes and catch basins where indicated. If elevation is raised 12 inches or less, add brick courses below castings. If elevation is raised more than 12 inches, remove structure to bottom of cone or corbelling and rebuild

structure. Where elevation is lowered, remove brick courses from under castings if cone is not enlarged. If cone is enlarged, remove sufficient structure and maintain cone profile. Do not batter brick masonry steeper than 2.5:1.

2. Where connections between different piping materials are made, use manufactured "specials" and "transitions" to produce permanently tight joints.

B. Site Tolerances
   1. Maximum deviation from design elevation at any point along sewer shall not exceed 0.04 feet.

3.4 FIELD QUALITY CONTROL

A. Site Tests
   1. After backfilling is completed, flash light between manholes. Remedy any displaced pipe, misalignment or poor joints revealed by these tests.

B. Sewer Testing
   1. General
      a. Test per local codes.
   2. Hydrostatic Leakage Test
      a. Test system in sections not exceeding 500 feet in length.
      b. Tests shall be made by bulkheading sewer at lower end of test section and filling pipe with water to an elevation 2 feet above top of upstream end of pipe or 2 feet above highest ground water elevation along section under test, whichever is higher. Leakage measurement is measured quantity of water added to maintain water at this elevation. Tests shall be run for at least 4 hours.
      c. No additional leakage is allowed for leakage from manholes, plugs or cleanouts.
      d. Allowable leakage:
         1) Sanitary sewers. 0.2 gph/inch dia./100 feet of pipe.

3.5 CLEANING

A. Upon completion of work in each respective area, clean and protect Work.

B. Just before final acceptance, perform additional necessary cleaning to provide clean equipment and areas to Owner.

3.6 PROTECTION

A. Marking Tape
   1. Install approximately 6 to 8 inches below grade per manufacturer's instructions.

END OF SECTION

Revision History	
Date	**Rev. No.**
A	0
B	0
C	0
D	0
E	0
F	0
02-19-09	0

SK/djo
C:\D\TIMSDATASF\BROOKHAVEN_NATIONAL_LABORATORY\SF070003\200-PROJEXEC\280-SPEC\02530.DOC

THIS PAGE INTENTIONALLY LEFT BLANK

SECTION 02630

STORM DRAINAGE

PART 1 GENERAL

1.1 SUMMARY

A. Section Includes:
   1. Work for each system includes design and placement of systems, connections to existing work, required components, related earthwork, structures, concrete work and testing necessary to provide complete, functioning systems.

B. Related Work Specified In Other Sections:
   1. Site Demolition - Division 2.
   2. Earthwork other than that specified in this Section – Division 2.
   3. Utility Services - Division 2.
   4. Cast-In-Place Concrete other than that specified in this Section – Division 3
   5. Miscellaneous Metal Fabrications - Division 5.
   6. Riprap. Refer to Division 2, Soils and Aggregates.

C. Related Work Performed Under Other Contracts

1.2 SYSTEM DESCRIPTION

A. Storm Drainage (ST)
   1. Type CISP, Cast Iron Soil Pipe where shown. Type PVC-PSM, Polyvinyl Chloride Sewer Pipe from 5 feet outside building perimeter for piping under 12 inches except as shown. Type RCP, Reinforced Concrete Pipe from 5 feet outside building perimeter for piping 12 inches and larger except as shown. type CSP, Corrugated Steel Pipe or type CSP-SD Corrugated Steel Slotted Drain Pipe where shown.

B. Underdrain
   1. Type CSPU, Corrugated (Perforated) Steel Pipe.
   2. Type CPEU, Corrugated (Perforated) Polyethylene Pipe.
   3. Provide where shown.

1.3 SUBMITTALS

A. Furnish submittals for items that are identified in this Section by different typeface and bracketed code (e.g., *Item [L]*). Refer to Division 1 General Requirements for definition of codes for types of submittals and administrative requirements governing submittal procedure. Additional submittal requirements pertaining to this Section are specified under this Article.

B. *Product [P]:* Include materials and equipment classification and identification, required supports, and special installation requirements.

C. Submittals: Submit typical precast components for underground structures; do not submit specific configurations of each structure.

D. *Test Reports [T]:* Test reports: Submit structural integrity, leakage and performance test data.

E. Record*:* Submit progress prints and as-built drawings per Division 1 General Requirements.

F. Record*:* Pipe camera inspection video: Inspect 20 percent of pipe runs (rounded up) but no less than 2.

1.4 QUALITY ASSURANCE

A. Reference Specifications:
   1. Geotechnical Data.
   2. Submittals – Division 1 General Requirements.
   3. Soils and Aggregates – Division 2.
   4. Earthwork – Division 2.

B. Requirements Of Regulatory Agencies

1.5 DELIVERY, STORAGE, AND HANDLING

A. Store and protect plastic pipe to prevent ultraviolet deterioration and to minimize bowing.

PART 2 PRODUCTS

2.1 MATERIALS

A. Ells, tees, reducing tees, wyes, couplings, increasers, crosses, transitions and end caps shall be of same Type and Class of materials as pipe, or of material having equal strength and chemical resistance properties.

B. Type CISP, Cast Iron Soil Pipe
   1. Hub and spigot: Per ASTM A 74, “Standard Specification for Cast Iron Soil Pipe and Fittings”, coated inside and outside with coal tar enamel. Pipe with eccentrically cast, thin walls will not be accepted.
   2. Elastomer gaskets. Single pipe weight use, per ASTM C 564, “Standard Specification for Rubber Gaskets for Cast Iron Soil Pipe and Fittings”.

C. Type RCP, Reinforced Concrete Pipe
   1. Pipe and fittings: Include precast end sections, modified tongue and groove joints, per ASTM C 76, “Standard Specification for Reinforced Concrete Culvert, Storm Drain, and Sewer Pipe”, Class III or as shown. Stencil class identification inside bore of pipe and fittings. Elliptical reinforcement in circular pipe is not acceptable.

2. Compression elastomer joints. Per ASTM C 443, “Standard Specification for Joints for Circular Concrete Sewer and Culvert Pipe, Using Rubber Gaskets”. Provide neoprene elastomer for services related to building drainage.

D. Type PVCU, Perforated Polyvinyl Chloride Pipe
   1. Perforated, polyvinyl chloride pipe: Manufacturer’s standard construction, per ASTM F-758, “Standard Specification for Smooth-Wall Poly(Vinyl Chloride) (PVC) Plastic Underdrain Systems for Highway, Airport, and Similar Drainage”.

E. Type PVC-PSM, Polyvinyl Chloride Sewer Pipe
   1. Pipe, fittings and jointing materials: Per ASTM D 3034, “Standard Specification for Type PSM Poly(Vinyl Chloride) (PVC) Sewer Pipe and Fittings”, SDR 35 with elastomer gasket joint.

F. Piping Transitions
   1. Transitions. Provide for joining different types of pipe materials for joining different pipe sizes, and for joining cut pipe, where approved. Fabricate transitions with materials capable of resisting normal corrosion.
      a. Can-Tex Industries Division of Harsco Corp. “CT-Adapters”.
      b. Fernco Joint Sealer Co. “PVC Donut”.
      c. Joints, Inc. “Caulder”.

2.2 MANUFACTURED UNITS

A. CASTINGS

B. Shop coat ferrous metal surfaces with “Bituminous Coating”, except where other equivalent types of protective coatings are manufacturer’s standard. Provide each manhole cover with lettering identifying respective service: “Storm”.

C. Storm manhole frame and cover:
   1. Neenah R-1642 with Type B solid cover.
   2. East Jordan Iron Works No. 1040 with Type A solid cover.

D. Catch basin and inlet frame and grate:
   1. Neenah R-3448-B with Type S grate.
   2. East Jordan Iron Works No. 5000 with Type M1 grate.

E. Catch basin, inlet and storm manhole frame and grate:
   1. East Jordan Iron Works No. 1040 with Type M1 grate.
   2. Neenah No. R-2501 with Type G grate.

F. Manhole steps:
   1. Ductile iron, 16 inches wide.
      a. Neenah R-1980-M.
   2. Stainless steel per local code and OSHA requirements.

3. Formed steel with plastic jacketed exposed surfaces per local code and OSHA requirements.
4. Fiberglass reinforced plastic per local code and OSHA requirements.

G. Wall Pipes
1. Cast iron. Class D, bell and flange or flange and plain end.
   a. Clow F-1424 or F-1426.
   b. American Cast Iron Pipe.
   c. United States Pipe & Foundry Co.

H. UNDERGROUND PRECAST STRUCTURES
1. General. Use HS-2O live load for design purposes.
2. Precast:
   a. Riser Sections. ASTM C 478, “Standard Specification for Precast Reinforced Concrete Manhole Sections”, with factory formed openings and installed steps.
   b. Compression Elastomer Joints. ASTM C 443, “Standard Specification for Joints for Circular Concrete Sewer and Culvert Pipe, Using Rubber Gaskets”.
   c. Base. ASTM C 478, “Standard Specification for Precast Reinforced Concrete Manhole Sections”.
   d. Flat Slab. ASTM C 478, “Standard Specification for Precast Reinforced Concrete Manhole Sections”.
   e. Manhole Tee Section. ASTM C 76, “Standard Specification for Reinforced Concrete Culvert, Storm Drain, and Sewer Pipe”, Class IV minimum (Class V if required to match adjacent pipe) with joints to match adjacent pipe.

2.3 COMPONENTS

A. Masonry:
1. Brick. Type MB per ASTM C 32, “Standard Specification for Sewer and Manhole Brick (Made From Clay or Shale)”, Grade MS.
2. Block. Type CMU per ASTM C 139, “Standard Specification for Concrete Masonry Units for Construction of Catch Basins and Manholes”, formed units to structure diameter with cones battered vertically and curved horizontally if circular.

B. Leveling Course:
1. 1:10 ratio cement/sand dry mixture.

C. Plaster Coating:
1. Cement plaster coating 1/2 inch thick.

D. Pipe:

E. Flexible joint material for use at joint between pipe and manhole.
1. Res-Seal
2. Link-Seal
3. Press Wedge II

F. Trench drain system:
   1. Provide precast polymer concrete pre-sloped trench drainage system complete with heavy duty slotted cast iron gratings, grating locking device, catch basins with trash bucket and outlets as shown on Drawings. Components to be product of one manufacturer.
      a. Aco Drain Incorporated.
      b. Polymer Concrete Research, Inc.
   2. Channel section with end caps:
      a. Aco NW100.
      b. Polycart 600 Series.
   3. Catch basins:
      a. Aco Model No. 620.
      b. Polycart Model No. 651.
   4. Design system for H-20 loading.

2.4 ACCESSORIES

A. Gasket Joint Lubricant. Pipe manufacturer's recommended gasket lubricant.

B. Epoxy Bonding Compound. 2-component system suitable for bonding wet or dry concrete to each other and to other materials.
   1. Copolymer Chemicals, Inc., Detroit, MI. "Crete-Tac".
   2. H. B. Fuller Co., St. Paul, Minn. "BC-013-14".
   3. W. R. Grace Co., A. C. Horn Products, Chicago, IL., "Thiopoxy-63".

C. Underdrain Fabric. Nonwoven filtration (drainage) geotextile. Furnish in protective wrapper to resist abrasion and ultraviolet radiation.
   1. Site Type. For use in exterior areas more than 5 ft. outside of building wall lines, where underdrains are 10 ft. or less deep. Not for use within building wall lines.
      a. Phillips Fibers Corp. "Supac 4NP"
      b. Hoechst Celanese Corp. "Trevira 1114"
      c. Amoco Fabrics Co. "Style 4545"
   2. Building Type. For use in interior areas including exterior areas to 5 ft. outside of building wall lines; and for underdrains 10 ft. or more deep in both interior and exterior areas.
      a. Phillips Fibers Corp. "Supac 8NP"
      b. Hoechst Celanese Corp. "Trevira 1125"
      c. Amoco Fabrics Co. "Style 4553"

D. Concrete: Compressive strength of 3000 PSI at 28-days, per ASTM C 94, "Standard Specification for Ready-Mixed Concrete", with 5-7 percent entrained air.

E. Marking tape. Service identified 3 inch wide, green color foil-backed polyethylene tape, or non-foil tape.
   1. Reef Industries, Inc., "Terra Tape", Houston, Texas.
   2. Seton Co., New Haven, Connecticut.
   3. Thor Enterprises, Sun Prairie, Wisconsin.

F. Prefabricated Drainage System. Polypropylene and polyethylene drain core panels, with polypropylene fabric bonded to 1 side.
   1. American Enka Co. “Enkadrain”.
   2. America Wich Drain Corp. “Amerdrain, 480”.
   3. Mirafi, Inc. “Miradrain 6000”.

2.5 FINISHES

A. Bituminous coating:
   1. Koppers “Bitumastic 50”.
   2. Porter Coatings Division of Porter Paint Co. “Tarmastic 101”.

B. Manhole coating system. 3-coat, 24-mil thick system of coal tar epoxy and fibrous glass cloth.
   1. Ameron “Amercoat No. 78 HD”.
   2. Carboline “Carbomastic No. 15”.
   3. Pitt Chem “Tar Set”.

PART 3 EXECUTION

3.1 PREPARATION

A. Demolition
   1. Refer to Division 2, Site Demolition.

B. Excavation And Backfill
   1. Do excavating and backfilling required for Work, per procedures specified in Division 2, Soils and Aggregates, and Earthwork and following requirements.
   2. Trim to lines and elevations in manner specified under Embedment. Embedment starts at final trimmed trench elevation and ends at 12 inches above top of pipe or component; “Backfill” starts 12 inches above pipe or component. Use manual methods in areas adjacent to buried construction and utilities to avoid damage or unscheduled service interruption. Limit trench width or embankment conditions to preclude excessive earth loads on installed piping system.

C. New Connections
   1. Make complete connections to new or existing structures. Repair damage caused by Work to comply with Contract Documents at no increase in Contract sum.

D. Embedment (Bedding And Initial Backfill)
   1. Trim rough trench to subgrade and provide embedment as defined in Soils and Aggregates – Division 2, and as shown. Provide stable, uniform support consisting of minimum compacted thickness below bottom of exterior surface of pipe, including bell, as shown but not less than 4 inches. Shape bedding to provide full length barrel support and to prevent point loading at pipe joints. Place and compact per Soils and Aggregates – Division 2.
   2. When bottom of excavation cannot support pipe, excavate to further depth and width and refill to pipe laying grade with bedding material per Soils and Aggregates – Division 2.

3.2 INSTALLATION

A. General
   1. The following construction methods are not intended to be completely detailed. Provide properly functioning systems per applicable codes, manufacturer's instructions and standards and best accepted safe practice of Trades.
   2. Before lowering pipe into trench, clean and visually inspect for apparent defects. Remove defective pipe from site promptly. Before and during laying of pipe, maintain excavations dry and clear of water and extraneous materials. Provide minimum 4 inches of clearance for pipes passing under or through building grade beams or provide surface penetrations as shown.
   3. Where pipe is embedded in an underground concrete structure, provide joints within 12 inches of exterior surface of structure, capable of absorbing movement without leakage.
   4. Where connections between different piping materials are made, use manufactured "specials" and "transitions" to produce permanently tight joints.
   5. Clean and lubricate elastomer joints before assembly. Check recessed gaskets with feeler gages.
   6. During progress of construction, protect open ends of 18 inch and smaller pipe, fittings to prevent admission of foreign matter. Place plugs or end boards in ends of installed work whenever work stops. Plugs shall be commercially manufactured products.

B. Type CISP, Cast Iron Soil Pipe
   1. Install per CISPI Cast Iron Soil Pipe and Fittings Handbook except as modified by Contract Documents.
   2. Provide lead and oakum joints in vertical piping or where rigid joint alignment is required or where floor drains are caulked. Make joints with 1 pouring of molten lead, calked to produce liquid-tight joints without stressing hub or spigot. Where lead is driven 1/4 inch or more below face of hub, remove lead and remake joint.

C. Type RCP, Reinforced Concrete Pipe
   1. Install per ACPA Concrete Pipe Installation Manual except as modified by Contract Documents.
   2. Method of field tapping for branch connections is subject to approval by Registered Design Professional. Utilize "Epoxy Bonding Compound" to join cleaned piping and wet or dry cement.
   3. Do not install pipe with chipped or otherwise damaged joint areas.

D. Type PVC-PSM, Polyvinyl Chloride Sewer Pipe
   1. Install per ASTM D 2321, "Standard Practice for Underground Installation of Thermoplastic Pipe for Sewers and Other Gravity-Flow Applications", except as modified by Contract Documents.
   2. At no point shall completed installation have out-of-round pipe deflections greater than 7-1/2 percent. Registered Design Professional may require deflectometer or go/no-go gauging tests run on pipeline acceptance. Remove and install new pipe in sections that has deflected more than 7-1/2 percent per ASTM D 3034, "Standard Specification for Type

PSM Poly(Vinyl Chloride) (PVC) Sewer Pipe and Fittings". Test pipe for deflection not less than 30 days following completion of installation.

E. Underdrain Installation
   1. Place Underdrain Fabric in prepared trench, overlapping ends at least 2 feet and spread material without wrinkles.
   2. Lay pipe with perforations down, with firm embedment, and with each section having full bearing throughout its length to grade shown. Use fittings for changes in direction.
   3. Place specified materials and compact as specified in Division 2.
   4. Wrap Underdrain Fabric over filter materials and pipe, overlapping at least 12 inches. Cover fabric within 10 days of removing protective wrapper.

F. Epoxy Bonding To Existing Materials
   1. Use Epoxy Bonding Compound to set sleeves or pipes in existing concrete or to bond dissimilar materials.
   2. The compound, when applied per manufacturer's instructions, shall be capable of initial curing within 48 hours at temperatures as low as 40 degF and shall be capable of bonding any combination of the following properly prepared materials. Wet or dry, cured or uncured concrete or mortar; vitrified clay; cast iron, and carbon steel.

G. Jacking Of Pipe
   1. Do not jack pipe in place except upon prior approval of proposed materials and complete details of methods.

H. Marking Tape
   1. Install approximately 6 to 8 inches below grade per manufacturer's instructions.

I. Drainage Structures
   1. Install as shown.

J. Manhole Coating
   1. Provide drainage pit with Manhole Coating System applied as follows:
      a. Brush blast surfaces before application of coal tar epoxy.
      b. Reinforce pit corners with layers of 12, 8, and 4 inch wide strips of closely woven, oil-free glass cloth embedded in successive layers of coal tar epoxy.
      c. Each coat of coal tar shall be 8 mils thick. Apply each successive phase of work involving coal tar epoxy within 24 hours.

K. Adjusting Existing Structure Top Elevation
   1. Adjust top elevations of manholes and catch basins where shown. If elevation is raised 12 inches or less, add brick courses below castings. If elevation is raised more than 12 inches, remove structure to bottom of cone or corbelling and rebuild structure. Where elevation is lowered, remove brick courses from under castings if cone is not enlarged. If cone is enlarged, remove sufficient structure and maintain cone profile. Do not batter brick masonry steeper than 2.5:1.

L. Concrete Work
   1. Perform concrete work per details shown, including reinforcing.

M. Riprap
   1. Lay riprap to extent shown, starting at low points and working up slopes. Place riprap individually, firmly embedding each piece into substrate and against adjacent pieces. Use small pieces to fill voids between larger pieces. Finished surface shall not deviate from elevations or slopes shown, in any direction, within tolerances of plus or minus 1 inch when measured with 10-foot straightedge. Grout joints with mixture of 1 part portland cement and 3 parts sand, using clean water.

3.3 FIELD QUALITY CONTROL

A. Site Tests
   1. At discretion of Owner and at Owner's expense crushing strength of VCP and RCP may be tested per ASTM C 301, "Standard Test Methods for Soluble Cellulose Nitrate", and ASTM C 497, "Standard Test Methods for Concrete Pipe, Manhole Sections, or Tile".
   2. One half of 1 percent of number of pipe sections of each pipe size and type to be installed may be selected by Owner for testing; in no case shall less than 2 pipes in each size and type be tested. Failure to meet tests may be cause for rejection of entire lot of pipe.
   3. Test Underdrain per requirements of governing codes.

B. Inspection
   1. Maximum deviation from design elevation at any point along sewer shall not exceed 0.04 feet.
   2. Maximum deviation from line at any point along sewer (normally at straight line between points of change in direction) shall not exceed 0.20 feet for pipes 15 inches in diameter and smaller and 0.40 feet for pipes larger than 15 inches in diameter. Corrections for deviation from line within preceding tolerances shall be made at correction rates not to exceed 0.10 feet for any 1 length of pipe.
   3. After backfilling is completed, flash light between manholes. Remedy any displaced pipe, misalignment or poor joints revealed by this test.

C. Sewer Testing
   1. General
      a. Test per local codes.
   2. Hydrostatic Leakage Test
      a. Test system in sections not exceeding 500 feet in length.
      b. Tests shall be made by bulkheading sewer at lower end of test section and filling pipe with water to an elevation 2 feet above top of upstream end of pipe or 2 feet above highest ground water elevation along section under test, whichever is highest. Leakage is measured quantity of water added to maintain water at this elevation. Test shall be run for at least 4 hours.
      c. Leakage from manholes, plugs, or cleanouts shall not be included in the allowable leakage quantity.

d. Allowable Leakage Quantities.
   1) Sanitary sewers. 0.2 gph/inch dia./100 feet of pipe.
   2) Process waste sewers. 0.2 gph/inch dia./100 feet of pipe.
   3) Storm sewers. 0.4 gph/inch dia./100 feet of pipe.

3. Camera Test
   a. Pipe camera inspection video: Inspect 20 percent of pipe runs (rounded up) but no less than 2.

3.4 CLEANING

A. Upon completion of work in each respective area, clean and protect work. Just before final acceptance, do additional necessary cleaning to provide clean equipment and areas to Owner.

END OF SECTION

Revision History	
Date	**Rev. No.**
A	0
B	0
C	0
D	0
E	0
F	0
02-19-09	0

SK/djo
C:\D\TIMSDATASF\BROOKHAVEN_NATIONAL_LABORATORY\SF070003\200-PROJEXEC\280-SPEC\02630.DOC

SECTION 02740

FLEXIBLE PAVEMENT

PART 1 GENERAL

1.1 SUMMARY

A. Section Includes:
   1. Provide asphaltic concrete paving, including pavement sealing and marking and other Work incidental to complete installation, as shown or specified.
   2. In earth subgrade areas, over prepared subgrade, aggregate subbase; aggregate base course; asphaltic concrete leveling course; bond coat; asphaltic concrete wearing course; sealer.

B. Related Work Specified In Other Sections:
   1. Earthwork, graded to top of subgrade and including stabilization - Division 2.
   2. Underground Utility Services - Division 2.
   3. Underground Electrical Services - Division 16.

C. Definitions
   1. DOT: Department of Transportation.
   2. Cold Weather**:** Average of highest and lowest outdoor air temperature from midnight to midnight of previous 3 calendar days is below 40 degrees F and has not been above 50 degrees F for more than 12 hours in any 24 hour period during previous 72 hours.
   3. Hot Weather**:** Estimated concrete surface moisture evaporation rate exceeds 0.1 pounds per square foot per hour or calculated site evaporation rate exceeds 0.2 pounds per square foot per hour using methods illustrated in ACI 305R.
   4. Protection Period: Beginning immediately after concrete placement, time during which formwork may not be removed or concrete is required to be maintained within specific temperature range in order to prevent freezing, excessive evaporation, or to insure necessary strength development.
   5. Tolerances**:** Variation of measurements (quantity, length, elevation, slope, weight) that is allowed from that noted. Plus (+) tolerance increases measurement to which it applies. Minus (-) tolerance decreases measurement to which it applies. Where only 1 signed tolerance is given there is no limit in other direction, however, other measurements or tolerances may govern. When measurement is specified as "maximum," "not more than," "less than," "up to," plus tolerance is +0. When measurement is specified as "minimum," "at least," "greater than," "more than," minus tolerance is -0. Where range in measurement is specified there is no allowed variation beyond range.

1.2 SUBMITTALS

A. Furnish submittals for items that are identified in this Section by different typeface and bracketed code (e.g., *Item [L]*). Refer to Division 1 General Requirements for definition of codes for types of submittals and administrative requirements governing submittal procedure. Additional submittal requirements pertaining to this Section are specified under this Article.

B. *Qualifications [Q]:* Submit descriptive data on Testing Agency proposed for use on this Project.

C. *Mix Report [D]:* Submit mix report for each asphaltic concrete mixture and include proportions of different aggregates and mineral filler, combined aggregate gradation, and recommended asphalt content. Include laboratory tests and curves used to arrive at proposed mix. Submit in sufficient time to allow review and approval before start of field operations.

D. Certificate: Certification of compliance with specifications and drawings signed by product suppliers.

E. Schedules: Submit proposed schedule for work and indicate any expected interference with Owner's normal activities. After approval by Owner, deviations shall require written authorization from Owner.

1.3 QUALITY ASSURANCE

A. Reference Standards
   1. Regulatory Requirements: Provide asphalt pavement according to standards referenced in this Section. Should specifications of state or authority having jurisdiction be more stringent, then these shall govern.
      a. The Registered Design Professional and Owner's Representative shall determine extent of compliance based on intent of Contract Documents.
      b. Measurement and payment provisions and safety program submittals shall be followed per General, Supplementary, Special Conditions and Division 1 Specification Sections.
   2. Manufacturer Qualifications: Qualified manufacturer.
      a. Manufacturer shall be paving-mix manufacturer registered with and approved by authorities having jurisdiction or NYDOT.
   3. Testing Agency Qualifications: Qualified according to ASTM D 3666, "Standard Specification for Minimum Requirements for Agencies Testing and Inspecting Road and Paving Materials", for testing indicated, as documented according to ASTM E 548, " Standard Guide for General Criteria Used for Evaluating Laboratory Competence".
   4. Asphalt-Paving Publication: Comply with AI MS-22, "Construction of Hot Mix Asphalt Pavements," unless more stringent requirements are indicated.
   5. Preinstallation Conference: Conduct conference at Project site to comply with requirements in Division 1 General Requirements.
   6. Preinstallation Conference: Conduct conference at Project site to comply with requirements in Division 1 General Requirements. Review methods and procedures related to hot-mix asphalt paving including, but not limited to, the following:
      a. Review proposed sources of paving materials, including capabilities and location of plant that manufactures hot-mix asphalt.
      b. Review condition of subgrade and preparatory work.
      c. Review requirements for protecting paving work, including restriction of traffic during installation period and for remainder of construction period.
      d. Review and finalize construction schedule and verify availability of materials, Installer's personnel, equipment, and facilities needed to make progress and avoid delays.

7. Provide hot mix bituminous cement concrete pavement according to material, testing, workmanship, and other applicable requirements of standard specifications of state or authority having jurisdiction and standards referenced in this Section. Should there be discrepancies between specifications of state or authority and this Section, state or authority shall govern except as noted.
    a. The Registered Design Professional and Owner's Representative shall determine extent of compliance based on intent of Contract.
    b. Measurement and payment provisions and safety program submittals shall be followed per General, Supplementary, Special Conditions and Division 1 General Requirements.

B. Reference Specifications
1. Refer to the following for information and criteria in regard to soils and aggregates:
    a. Geotechnical Data.
    b. Soils and Aggregates - Division 2.

C. Producer Qualifications
1. Producer of asphaltic concrete mixtures shall be bulk producer, regularly engaged in production of hot-mix, hot-laid asphaltic concrete.

D. Testing
1. Laboratory and field sampling and testing of materials to determine conformance with Specifications, and to provide quality control during construction shall be done by independent, well established and qualified commercial testing agencies. Personnel shall be qualified and shall have had experience on projects equal to complexity of this project. Agency that tests proposed materials shall not be same agency that provides quality control during construction.
2. Owner will retain testing agencies for providing quality control during construction. Contractor shall retain testing agency to test proposed materials and submit qualifications of testing agency and its personnel to Registered Design Professional for approval before retaining agency. Registered Design Professional reserves right to request change in personnel or firm at any time.
3. Each testing agency shall submit duplicate written reports of tests, findings, investigations and recommendations to Contractor and to Registered Design Professional, as soon as each report has been completed, preferably same day, but not more than 1 working day later.

1.4 PROJECT/SITE CONDITIONS

A. Protection
1. Provide barricades, flagmen, warning signs and warning lights to allow movement of traffic. If fire lanes are affected by these operations, secure alternate route for fire trucks.
2. Provide protection for vehicular and pedestrian traffic through and adjacent to these operations.

B. Sequencing, Scheduling
1. Do not install any materials when ground is frozen or covered with snow, ice or water; it is raining.

2. Place various courses when ambient temperatures, taken in shade, are as follows:
   a. Aggregate Base or Subbase Course. 35 degF or higher.
   b. Seal Coats. 50 degF or higher and when temperature has not been lower than 35 degF for 12 hours before application.
   c. Asphaltic Concrete Courses. 40 degF or higher.
   d. Pavement-Marking Paint: Proceed with pavement marking only on clean, dry surfaces and at minimum ambient or surface temperature of 40 deg F (4 deg C) for oil-based materials, 50 deg F (10 deg C) for water-based materials, and not exceeding 95 deg F (35 deg C).
3. Any areas of in-place aggregate subbase or base course that are damaged by freezing, rainfall or other weather conditions shall be brought to condition in compliance with Contract Documents at no cost to Owner.
4. When wearing course placement is deferred over winter, use wearing course mixture for leveling course.
5. Saw cut existing paving to achieve straight-line cut when abutting new paving to existing. Start cut sufficient distance back from existing edge to provide straight line.
6. Match existing elevations of abutting paving unless shown otherwise.

1.5 WARRANTY

A. Seal Coats: *Guarantee [G]:* seal coat at least 1 year against sticking, oil bleed back, and wearing away.

PART 2 PRODUCTS

2.1 MATERIALS

A. Subgrade: Improved subgrade compacted to 92 percent of maximum dry density as determined by modified proctor test ASTM D1557.

B. Aggregate Base: Course per NYDOT Section 300 subbase type 1 (crushed stone or recycled concrete).

C. Asphalt Materials
   1. Provide asphalt concrete top wearing course per NYSDOT Standard Specifications, Section 400 Hot Mix Asphalt, Type 6F, Top Course.
   2. Provide asphalt concrete binder course per NYSDOT Standard Specifications, Section 400 Hot Mix Asphalt, Type 3 binder course.
   3. Prime Coat: Medium curing cut-back asphalt or asphalt penetrating prime coat consisting of either MC-30 or SS-1h.
   4. Tack Coat: Emulsified asphalt; AASHTO M 140 or AASHTO M 208, SS-1h, CSS-1, or CSS-1h, diluted with 1 part water to 1 part emulsified asphalt.

D. Herbicide: Commercial chemical for weed control, registered by EPA. Provide in granular, liquid, or wettable powder form.

E. Joint Sealant: AASHTO M 301, hot-applied, single-component, polymer-modified asphaltic sealant.

F. Pavement-Marking Paint: Alkyd-resin type, lead and chromate free, ready mixed, complying with FS TT-P-115, Type I or AASHTO M 248, Type N or F.
   1. Color: Match with existing parking at site.

2.2 MIXES

A. Marshall Method Criteria
   1. Mixes: Comply with the following criteria:

	Marshall Stability (lbs) minimum	Flow (inches) range	VMA* Percent minimum	Air Voids Percent range
Surface and Leveling Courses -	1,800	.09 - .16	14.5	3-5

   2. Nominal Aggregate Size: As follows:
      a. Base Course: 1 inch (25 mm).
      b. Top Course: 1/2 inch (13 mm).
   3. Emulsified-Asphalt Slurry: ASTM D 3910, “Standard Practices for Design, Testing, and Construction of Slurry Seal”, consisting of emulsified asphalt, fine aggregates, and mineral fillers and as follows:
      a. Composition: Type 1

B. Hot-Mix Asphalt: Dense, hot-laid, hot-mix asphalt plant mixes per NYSDOT Section 400 and complying with the following requirements:
   1. Provide mixes with history of satisfactory performance in geographical project area.
   2. Base Course: Type 1 per NYSDOT Section 300.
   3. Top Course: Type 6F per NYSDOT Section 400.

C. Mix Design
   1. *Mix Design [D]:* Contractor shall provide mixture that conforms to specified requirements listed under Article Marshall Method Criteria.
   2. The Registered Design Professional reserves right to increase design asphalt content 0.3 percent above recommended content, at no additional cost to Owner.

PART 3 EXECUTION

3.1 PREPARATION

A. Subgrade Preparation
   1. Fine grade and compact earth subgrades and bring to required elevations and cross-sections. Clean surfaces of existing concrete pavement and remove dirt, loose materials, and soft materials to provide sound, dry surfaces ready to receive paving.
   2. Before placing any overlying materials, proof roll compacted subgrade with 10-ton rollers. Rework any soft areas or areas unable to support rollers, until reworked subgrade

is acceptable to Registered Design Professional and meets compaction requirements specified in Earthwork – Division 2.

B. Patching
   1. Hot-Mix Asphalt Pavement: Saw cut perimeter of patch and excavate existing pavement section to sound base. Excavate rectangular or trapezoidal patches, extending 12 inches (300 mm) into adjacent sound pavement, unless otherwise shown . Cut excavation faces vertically. Remove excavated material. Recompact existing unbound-aggregate base course to form new subgrade.
   2. Portland Cement Concrete Pavement: Break cracked slabs and roll to reseat concrete pieces firmly.
      a. Pump hot undersealing asphalt under rocking slabs until slab is stabilized or, if necessary, crack slab into pieces and roll to reseat pieces firmly.
      b. Remove disintegrated or badly cracked pavement. Excavate rectangular or trapezoidal patches, extending into adjacent sound pavement, unless otherwise shown. Cut excavation faces vertically. Recompact existing unbound-aggregate base course to form new subgrade.
   3. Bond Coat: Apply uniformly to vertical surfaces abutting or projecting into new, hot-mix asphalt paving at rate of 0.05 to 0.15 gal. per sq. yd. (0.2 to 0.7 Liters per sq. m).
      a. Allow bond coat to cure undisturbed before applying hot-mix asphalt paving.
      b. Avoid smearing or staining adjoining surfaces, appurtenances, and surroundings. Remove spillages and clean affected surfaces.
   4. Patching: Fill excavated pavements with hot-mix asphalt base mix and, while still hot, compact flush with adjacent surface.
   5. Patching: Partially fill excavated pavements with hot-mix asphalt base mix and, while still hot, compact. Cover asphalt base course with compacted, hot-mix surface layer finished flush with adjacent surfaces.

C. Repairs
   1. Leveling Course: Install and compact leveling course consisting of hot-mix asphalt top course to level sags and fill depressions deeper than 1 inch (25 mm) in existing pavements.
      a. Install leveling wedges in compacted lifts not exceeding 3 inches (75 mm) thick.
   2. Crack and Joint Filling: Remove existing joint filler material from cracks or joints to depth of 1/4 inch (6 mm).
      a. Clean cracks and joints in existing hot-mix asphalt pavement.
      b. Use emulsified-asphalt slurry to seal cracks and joints less than 1/4 inch (6 mm) wide. Fill flush with surface of existing pavement and remove excess.
      c. Use hot-applied joint sealant to seal cracks and joints more than 1/4 inch (6 mm) wide. Fill flush with surface of existing pavement and remove excess.

D. General: Immediately before placing asphalt materials, remove loose and deleterious material from substrate surfaces. Ensure that prepared subgrade is ready to receive paving.
   1. Sweep loose granular particles from surface of unbound-aggregate base course. Do not dislodge or disturb aggregate embedded in compacted surface of base course.

E. Herbicide Treatment: Apply herbicide according to manufacturer's recommended rates and written application instructions. Apply to dry, prepared subgrade or surface of compacted-aggregate base before applying paving materials.

F. Bond Coat: Apply uniformly to surfaces of existing pavement at rate of 0.05 to 0.15 gal. per sq. yd. (0.2 to 0.7 Liter per sq. m).
   1. Allow bond coat to cure undisturbed before applying hot-mix asphalt paving.
   2. Avoid smearing or staining adjoining surfaces, appurtenances, and surroundings. Remove spillages and clean affected surfaces.

3.2 APPLICATION

A. Hot-Mix Asphalt Placing
   1. Machine place hot-mix asphalt on prepared surface, spread uniformly, and strike off. Place asphalt mix by hand to areas inaccessible to equipment in manner that prevents segregation of mix. Place each course to required grade, cross section, and thickness when compacted.
      a. Place hot-mix asphalt base course in number of lifts and thicknesses shown.
      b. Place hot-mix asphalt surface course in single lift.
      c. Spread mix at minimum temperature of 250 deg F (121 deg C).
      d. Begin applying mix along centerline of crown for crowned sections and on high side of 1-way slopes, unless otherwise shown .
      e. Regulate paver machine speed to obtain smooth, continuous surface free of pulls and tears in asphalt-paving mat.
   2. Place paving in consecutive strips not less than 10 feet (3 m) wide unless infill edge strips of lesser width are required.
      a. After first strip has been placed and rolled, place succeeding strips and extend rolling to overlap previous strips. Complete sections of asphalt base course before placing asphalt surface course.
   3. Promptly correct surface irregularities in paving course behind paver. Use suitable hand tools to remove excess material forming high spots. Fill depressions with hot-mix asphalt to prevent segregation of mix; use suitable hand tools to smooth surface.

B. Joints
   1. Construct joints to ensure continuous bond between adjoining paving sections. Construct joints free of depressions with same texture and smoothness as other sections of hot-mix asphalt course.
      a. Clean contact surfaces and apply bond coat to joints.
      b. Offset longitudinal joints, in successive courses, minimum of 6 inches (150 mm).
      c. Offset transverse joints, in successive courses, minimum of 24 inches (600 mm).
      d. Construct transverse joints as described in AI MS-22, "Construction of Hot Mix Asphalt Pavements."
      e. Compact joints as soon as hot-mix asphalt can bear roller weight without excessive displacement.
      f. Compact asphalt at joints to density within 2 percent of specified course density.

C. Compaction

1. General: Begin compaction as soon as placed hot-mix paving can bear roller weight without excessive displacement. Compact hot-mix paving with hot, hand tampers or vibratory-plate compactors in areas inaccessible to rollers.
   a. Complete compaction before mix temperature cools to 185 deg F (85 deg C).
2. Breakdown Rolling: Complete breakdown or initial rolling immediately after rolling joints and outside edge. Examine surface immediately after breakdown rolling for crown, grade, and smoothness. Correct laydown and rolling operations to comply with requirements.
3. Intermediate Rolling: Begin intermediate rolling immediately after breakdown rolling while hot-mix asphalt is still hot enough to achieve specified density. Continue rolling until hot-mix asphalt course has been uniformly compacted to the following density:
   a. Average Density: 96 percent of reference laboratory density according to AASHTO T 245, but not less than 94 percent nor greater than 100 percent.
   b. Average Density: 92 percent of reference maximum theoretical density according to ASTM D 2041, “Standard Test Method for Theoretical Maximum Specific Gravity and Density of Bituminous Paving Mixtures”, but not less than 90 percent nor greater than 96 percent.
4. Finish Rolling: Finish roll paved surfaces to remove roller marks while hot-mix asphalt is still warm.
5. Edge Shaping: While surface is being compacted and finished, trim edges of pavement to proper alignment. Bevel edges while asphalt is still hot; compact thoroughly.
6. Repairs: Remove paved areas that are defective or contaminated with foreign materials and replace with fresh, hot-mix asphalt. Compact by rolling to specified density and surface smoothness.
7. Protection: After final rolling, do not permit vehicular traffic on pavement until it has cooled and hardened.
8. Erect barricades to protect paving from traffic until mixture has cooled enough not to become marked.

D. INSTALLATION TOLERANCES

1. Thickness: Compact each course to produce thickness shown within the following tolerances:
2. Base Course: Plus or minus 1/4 inch (13 mm).
3. Top Course: Plus 1/4 inch (6 mm), no minus.
4. Surface Smoothness: Compact each course to produce surface smoothness within the following tolerances as determined by using 10-foot (3-m) straightedges, applied transversely or longitudinally to paved areas:
5. Base Course: 1/4 inch (6 mm).
6. Top Course: 1/8 inch (3 mm).
7. Crowned Surfaces: Test with crowned template centered and at right angle to crown. Maximum allowable variance from template is 1/4 inch (6 mm).

3.3 CONSTRUCTION

A. Asphaltic Seal Coat

1. Seal surfaces of paving and exposed surfaces of asphaltic curbs with 2 applications of seal coat material, installed in accordance with manufacturer's written specifications and further to these Specifications. Clean and seal existing cracks.
2. Power brush areas with caked-on dirt, heavy grease and oil deposits. Chip off grease spots, if required, or burn off with torch and paint burned area with sealer. Brush out cracks with wire brush or sharp tool. Rout out cracks with power router to obtain uniform seals. Clean entire surface with power blower (minimum 5 horsepower unit).
3. Spray with herbicide where vegetation is evident. Paint remaining oil and grease spots with shellac-based paint. Dust painted surfaces with silica sand.
4. Fill cracks 1/4 inch or wider with asphalt (SP 170-180) at 400 degF; overfill and squeegee to form "bandage" about 1/8 inch thick and 2 to 3 inches wide.
   a. As shown, fill cracks with hot-poured rubberized crack filler at 300 degF. Use double-bottom heating unit.
   b. Cure crack filler per manufacturer's recommendations. Dust sealed areas with silica sand.
5. Dampen pavement before applying sealer. Apply sealer when pavement and atmospheric temperatures are 50 degF or higher, and rain is not expected before film has dried to rain resistant condition.
6. Apply sealer with machine having carpet drag or squeegee. Squeegee full visible cracks not previously filled. Apply first coat at 0.15 gallon per square yard, and second coat at 0.10 gallon per square yard.
7. Minimum sealing cure periods:
   a. Between coats -- dry to touch
   b. For foot traffic -- 4 to 6 hours
   c. For car traffic -- 24 hours
   d. For painting -- 1 week
8. Provide protective barricades or other devices during cure period.
9. Schedule work to minimize interference with Owner's normal activities. Normally work when areas are not in use.
   a. Submit proposed schedule for work and indicate any expected interference with Owner's normal activities. After approval by Owner, deviations shall require written authorization from Owner.

B. PAVEMENT MARKING

1. Do not apply pavement-marking paint until layout, colors, and placement have been verified with Registered Design Professional.
2. Marking-paint manufacturers caution that paint may bleed or tear surface of new asphalt unless asphalt is aged before painting. This aging period may vary from 30 to 90 days. If pavement marking proceeds immediately, consider revising to phased application of thin first coat followed by thicker second coat once asphalt has aged. Verify that two-coat application is recommended by pavement-marking manufacturer.
3. Allow paving to age for 30 days before starting pavement marking.
4. Sweep and clean surface to eliminate loose material and dust.

3.4 FIELD QUALITY CONTROL

A. Testing Agency: Owner will engage qualified independent testing and inspecting agency to perform field tests and inspections and to prepare test reports.
   1. Testing agency shall conduct and interpret tests and state in each report whether tested Work complies with or deviates from specified requirements.

B. Additional testing and inspecting, at Contractor's expense, shall be performed to determine compliance of replaced or additional work with specified requirements.

C. Site Tests - Asphalt

D. Thickness: In-place compacted thickness of hot-mix asphalt courses shall be determined according to ASTM D 3549, “Standard Test Method for Thickness or Height of Compacted Bituminous Paving Mixture Specimens”.

E. Surface Smoothness: Finished surface of each hot-mix asphalt course shall be tested for compliance with smoothness tolerances.

F. In-Place Density: Testing agency shall take samples of uncompacted paving mixtures and compacted pavement according to ASTM D 979, “Standard Practice for Sampling Bituminous Paving Mixtures” or AASHTO T 168.
   1. Reference maximum theoretical density shall be determined by averaging results from four samples of hot-mix asphalt-paving mixture delivered daily to site, prepared according to ASTM D 2041, “Standard Test Method for Theoretical Maximum Specific Gravity and Density of Bituminous Paving Mixtures”, and compacted according to job-mix specifications.
   2. In-place density of compacted pavement shall be determined by testing core samples according to ASTM D 1188, “Standard Test Method for Bulk Specific Gravity and Density of Compacted Bituminous Mixtures Using Paraffin-Coated Specimens” or ASTM D 2726, “Standard Test Method for Bulk Specific Gravity and Density of Non-Absorptive Compacted Bituminous Mixtures”.
      a. One core sample shall be taken for every 1000 sq. yd. (836 sq. m) or less of installed pavement, with no fewer than 3 cores taken.
      b. Field density of in-place compacted pavement may also be determined by nuclear method according to ASTM D 2950, “Standard Test Method for Density of Bituminous Concrete in Place by Nuclear Methods” and correlated with ASTM D 1188, “Standard Test Method for Bulk Specific Gravity and Density of Compacted Bituminous Mixtures Using Paraffin-Coated Specimens”, or ASTM D 2726, “Standard Test Method for Bulk Specific Gravity and Density of Non-Absorptive Compacted Bituminous Mixtures”.

3.5 RE-INSTALLATION

A. Where test results or measurements indicate that it does not comply with specified requirements, remove and replace with new asphalt or install additional hot-mix asphalt.

B. Correct any deficient areas that show evidence of excessive cracking or instability be re-mixing, regrading and recompacting at no additional cost to Owner.

3.6 DISPOSAL

A. Except for material shown to be recycled, remove excavated materials from Project site and legally dispose of them in EPA-approved landfills.
   1. Do not allow excavated materials to accumulate on-site.

END OF SECTION

Revision History	
Date	**Rev. No.**
A	0
B	0
C	0
D	0
E	0
F	0
02-19-09	0

SK/djo
C:\D\TIMSDATASF\BROOKHAVEN_NATIONAL_LABORATORY\SF070003\200-PROJEXEC\280-SPEC\02740.DOC

THIS PAGE INTENTIONALLY LEFT BLANK

SECTION 02820

FENCE AND GATES

PART 1 GENERAL

1.1 SUMMARY

A. Section Includes:
   1. Provide Chain Link Fence, complete with bases, accessories and incidental work as shown or specified.
   2. Gates.

B. Related Work Specified In Other Sections:
   1. Earthwork - Division 2.
   2. Access Control Security Systems – Division 1 General Requirements.

C. Provided By Owner:
   1. Padlocks for gate latch.

1.2 SUBMITTALS

A. Furnish submittals for items identified in this Section by different typefaces and bracketed code letters (e.g., *Item [L]*). Refer to Division 1 General Requirements for definition of codes for types of submittals and administrative requirements governing submittal procedure. Additional submittal requirements concerning this Section are specified under this Article.

B. *Shop Drawings [D]:* Show plan layout, fence height, sizes and gages of components, gates, hardware, bases and erection details. Also, submit gate and gate operator details.

C. *Product Data [P]:* Submit data describing each component's material, shape, and finish; and manufacturer's erection and installation instructions.

1.3 QUALITY ASSURANCE

A. Qualifications
   1. Chain Link Fence Manufacturer's Institute publications as follows:
      a. Specification for Galvanized Steel Chain Link Fence Fabric.
      b. Industrial Steel Specifications for Fence-Posts, Gates, and Accessories.
      c. Standards for Chain Link Fence Installation.
   2. Installer Qualifications
      a. The Chain Link Fence and Gates installation firm shall have experience in similar size and complexity fence work.

PART 2 PRODUCTS

2.1 MANUFACTURERS

A. Master Halco.

B. Cyclone Fence by U. S. Steel Supply, Division of United States Steel.

C. Fence Division, Allied Tube & Conduit.

D. Page-Wilson Corp.

E. Semmerling Manufacturing Corp.

2.2 MATERIALS

A. Protective Coating
   1. Coating for ASTM A 1011, "Standard Specification for Steel, Sheet and Strip, Hot-Rolled, Carbon, Structural, High-Strength Low-Alloy and High-Strength Low-Alloy with Improved Formability", Pipe:
      a. External.
         1) One ounce (0.1 oz.) or more of zinc per square foot,
         2) 30 micrograms or more
         3) 15 micrograms chromate, and
         4) 0.5 mils and 0.2 mils clear cross-linked polyurethane acrylic.
      b. Internal. Zinc-rich based organic coating with minimum 87% zinc powder, capable of providing galvanic protection.
   2. Gate Panel:
      a. Chain Link Fence Gate Panel: Gate panel shall be manufactured with galvanized steel pipe meeting requirements in ASTM F 900, "Standard Specification for Industrial and Commercial Swing Gates". Gate frame shall be welded to form ridged panel.
      b. Outer Support Members:
         1) Grade A steel pipe 1.9000 inches O.D. weighing 2.72 lbs. Per lin. Ft.
         2) Grade B steel tubing 1.900 inches O.D. weight may differ depending on manufacturer. Product shall be equal to SCH 40.
      c. Inner Support Members:
         1) Grade A steel pipe 1.660 inches O.D. weighing 2.27 lbs. Per lin. Ft.
         2) Grade B steel tubing 1.660 inches O.D. weight may differ depending on manufacturer. Product shall be equal to SCH 40.
   3. Finish:
      a. Galvanizing: Exposed system parts shall be zinc galvanized.

2.3 MANUFACTURED UNITS

A. Fabricate gate leaf frames from tubular members. Provide additional horizontal and vertical members to ensure proper gate operation and for attachment of fabric and hardware.

B. Weld gate frames or assemble with special malleable or pressed steel fittings and rivets to develop rigid connections. Install fabric with stretcher bars at edges. Secure fabric and stretcher bars with bands at not over 15 inches on center. Attach hardware with rivets or by other rigid means to ensure against breakage or removal of hardware.

C. Provide diagonal cross bracing with adjustable truss rod on gates to obtain frame rigidity and freedom from sag or twist.

2.4 COMPONENTS

A. Fabric: Zinc-coated, No. 9 gage, steel wire, 2 inch diamond mesh, per ASTM A 392, "Standard Specification for Zinc-Coated Steel Chain-Link Fence Fabric", Class 1, with twisting and barbing on both selvages.

B. Tie Wire: Zinc-coated No. 9 gage, steel wire Class C, spaced 14 inches, 356 mm on center for tying fabric to line posts and 24 inches, 610 mm on center for tying fabric to top rails and bracing.

C. Posts: Zinc-coated, steel pipe of diameters and weights specified, per ASTM A 123, "Standard Specification for Zinc (Hot-Dip Galvanized) Coatings on Iron and Steel Products", ASTM A 1011, "Standard Specification for Steel, Sheet and Strip, Hot-Rolled, Carbon, Structural, High-Strength Low-Alloy and High-Strength Low-Alloy with Improved Formability","C" Section of size and minimum bending strength specified, or of equivalent section as regularly furnished by manufacturer, for each function, as listed.

POSTS	**PIPE, A 120**		**"C" Section**		**PIPE, A 569**	
Function	**OD (inch)**	**WT/LF (lbs)**	**Size (inch)**	**WT/LF (lbs)**	**OD (inch)**	**WT/LF (lbs)**
Line	2.375	3.65	2.25 by 1.7	3.26	2.5	3.12
End, pull & corner	2.875	5.79	3.5 by 3.5	4.85	3.0	4.64
Gate Up to 5 ft.; 12 ft. Double; 15 ft. sliding	2.875	5.79	—	—	3.0	4.64
6 ft. to 13 ft; 12/26 double; over 15 ft. sliding	4.0	9.11	—	—	4.0	9.11

D. Gate Frames: Zinc-coated, steel pipe, per ASTM A 123, "Standard Specification for Zinc (Hot-Dip Galvanized) Coatings on Iron and Steel Products", 1.90 inch OD, 2.72 lbs/linear foot, or equivalent section as regularly furnished by manufacturer, or ASTM A 1011, "Standard Specification for Steel, Sheet and Strip, Hot-Rolled, Carbon, Structural, High-Strength Low-Alloy and High-Strength Low-Alloy with Improved Formability", cold-formed electric welded pipe 2.0 inch OD, 2.28 lbs/linear foot.

E. Top Rails: Zinc-coated, steel pipe 1.625 inch OD, 2.27 lbs/linear foot or 1.625 inch by 1.25 inch channel section, or ASTM A 1011, “Standard Specification for Steel, Sheet and Strip, Hot-Rolled, Carbon, Structural, High-Strength Low-Alloy and High-Strength Low-Alloy with Improved Formability”, steel pipe, 1-5/8 inch OD, 1.84 lbs/linear foot Furnish in manufacturers standard lengths of roughly 21 feet. Provide 6-inch long couplings at each joint with expansion couplings at every 5 joints, or less.

F. Center Rails: Provide center rails for fabric heights exceeding 12 feet - 0 inches, as follows. Zinc-coated, steel pipe 1.66 inch OD, 2.27 lbs/linear foot

G. Bracing: Zinc-coated, ASTM A 123, “Standard Specification for Zinc (Hot-Dip Galvanized) Coatings on Iron and Steel Products”, steel pipe 1.625 inch OD, 2.27 lbs/linear foot and 3/8 inch diameter adjustable truss rod or 1.625 inch by 1.25 inch channel section, or ASTM A 1011, “Standard Specification for Steel, Sheet and Strip, Hot-Rolled, Carbon, Structural, High-Strength Low-Alloy and High-Strength Low-Alloy with Improved Formability”, steel pipe 1-5/8 inch OD, 1.84 lbs/linear foot

H. Tension Wire: Zinc-coated No. 7 gage, coiled spring steel wire.

I. Supporting Arms: Zinc-coated, steel or iron with provisions for attaching 3 strands of barbed wire on single arm and for attaching to top of each post.

J. Post Tops: Zinc-coated, steel or iron weathertight closure cap, formed to support top rail.

K. Fabric Stretcher Bars: 3/16 inch by 3/4 inch minimum, zinc-coated steel bars, or equivalent cross-sectional area, placed at each gate, end, corner and pull post, secured to post by steel or iron bands, spaced not over 15 inches on center.

L. Manual Gate Hardware: Manufacturer’s standard items incorporating following features. Steel hinges, non-lift-off type, offset to permit 180 degree gate opening; forked type or plunger-bar type latch to permit operation from each side of gate, equipped with integral padlock eye. Provide keeper on vehicular gate to automatically engage and hold gate leaf open until manually released. Provide gate stop for double leaf gate set in concrete to engage plunger bar with locking device and padlock eye as an integral part of latch assembly.

M. Concrete
   1. Concrete: Air-entrained, 28-day compressive strength of 3000 PSI, per ASTM C 94, “Standard Specification for Ready-Mixed Concrete”.

N. Protection Screen
   1. Protection Screen: Zinc-coated, fully-welded assembly of 1/2 inch diameter steel rods, spaced 8 inches on center both ways.

PART 3 EXECUTION

3.1 PREPARATION

A. General
   1. Do not install fence until final grading is complete and finish elevations are established.
   2. Provide miscellaneous clips, bolts, nuts and other hardware items necessary to complete installation.

B. Excavation
   1. Drill holes for post bases as shown. Spread excavated material in area on Owner's property where directed.
   2. Space line posts at not more than 10 feet on center.

3.2 INSTALLATION

A. Bases
   1. Locate bases accurately to alignment and grade. Place concrete around posts in continuous pours and rod concrete to eliminate voids. Make posts plumb and true with vertical tolerance of 1/4-inch and hold in position during placement and finishing of concrete. Extend bases to 2 inches above grade. Slope or dome top to shed water away from posts and finish trowel exposed surfaces. Keep exposed concrete moist and let set for at least 7 days after placement.

B. Sequence
   1. Do not stretch fabric and wire and do not hang gate until concrete has attained its full design strength. Install top rails, tension wire and fabric no sooner than 7 days after concrete placement or after concrete has attained 75% of its design strength.

3.3 ERECTION

A. Run top rails continuous through post tops with coupling at each joint and expansion coupling at every 5 joints, or less. Set center rails flush with posts on fabric side, using offset fittings.

B. Install gates with hinges fastened securely to prevent twisting. Install fabric to match fencing. Adjust hardware for smooth operation.

C. Pull fabric taut and tie to posts, rails, and tension wires with wire ties and bands. Install fabric on security side of fence. Shape tie wires to posts and rails and twist ends. Install nuts for bolts on side of fence opposite fabric side, with end of bolts peened to prevent removal of nuts. Provide 1 brace at each gate post. Provide 2 braces at each end, corner and pull posts. Locate horizontal brace at mid-height of fabric.

D. Install protection screen at ditch and secure screen to line posts at edge of ditch.

3.4 CLEANING

A. Clean galvanized surfaces damaged during installation. Repair with galvanizing repair paint.

END OF SECTION

Revision History	
Date	**Rev. No.**
E	0
F	0
02-19-09	0

SK/djo
C:\D\TIMSDATASF\BROOKHAVEN_NATIONAL_LABORATORY\SF070003\200-PROJEXEC\280-SPEC\02820.DOC

SECTION 03300

CAST-IN-PLACE CONCRETE

PART 1 GENERAL

1.1 SUMMARY

A. Section Includes
   1. Cast-in-place structural concrete as shown on Drawings and as specified.

B. Products Installed But Not Supplied Under This Section.
   1. Anchor rods built into concrete work.
   2. Miscellaneous metal items built into concrete work.
      a. Guard or edge angles.
      b. Bearing plates.
      c. Anchor plates.
      d. Sump cover frames.
      e. Trench cover frames
      f. Ladder rungs.

C. Related Sections.
   1. Concrete for roads, sidewalks, curbs, gutters and exterior pavements - Division 2.
   2. Earthwork - Division 2.
   3. Concrete Slabs-On-Grade - Section 03315.
   4. Grout - Section 03600.
   5. Concrete for mechanical work, except housekeeping pads - Division 15.
   6. Concrete for electrical work, except housekeeping pads - Division 16.

1.2 REFERENCES

A. Reference standards - Standards of ACI, ASTM, CRD, PTI, and AWS referred to in this Section are listed with attendant serial designation. Use latest year of adoption or revision unless otherwise specified in Contract Documents.

ACI standards

ACI 117	Specification for Tolerances for Concrete Construction and Materials
ACI 301	Standard Specification for Structural Concrete

ASTM standards

A 82	Standard Specification for Steel Wire, Plain, for Concrete Reinforcement
A 184	Standard Specification for Fabricated Deformed Steel Bar Mats for Concrete Reinforcement
A 185	Standard Specification for Steel Welded Wire Fabric, Plain, for Concrete Reinforcement

A 496	Standard Specification for Steel Wire, Deformed, for Concrete Reinforcement
A 497	Standard Specification for Steel Welded Wire Fabric, Deformed, for Concrete Reinforcement
A 615	Standard Specification for Deformed and Plain Billet-Steel Bars for Concrete Reinforcement
A 616	Standard Specification for Rail-Steel Deformed and Plain Bars for Concrete Reinforcement
A 767	Standard Specification for Zinc-Coated (Galvanized) Steel Bars for Concrete Reinforcement
A 775	Standard Specification for Epoxy-Coated Reinforcing Steel Bars
A 780	Standard Practice for Repair of Damaged Hot-Dip Galvanized Coatings
A 884	Standard Specification for Epoxy-Coated Steel Wire and Welded Wire Fabric for Reinforcement
A 934	Standard Specification for Epoxy-Coated Prefabricated Steel Reinforcing Bars
A 955M	Standard Specification for Deformed and Plain Stainless Steel Bars for Concrete Reinforcement
A 970	Standard Specification for Welded or Forged Headed Bars for Concrete Reinforcement
A 996	Standard Specification for Rail-Steel and Axle-Steel Deformed Bars for Concrete Reinforcement
C 31	Standard Practice for Making and Curing Concrete Test Specimens in Field
C 33	Standard Specification for Concrete Aggregates
C 39	Standard Test Method for Compressive Strength of Cylindrical Concrete Specimens
C 42	Standard Test Method for Obtaining and Testing Drilled Cores and Sawed Beams of Concrete
C 94	Standard Specification for Ready-Mixed Concrete
C 138	Standard Test Method for Unit Weight, Yield, and Air Content of Concrete
C 143	Standard Test Method for Slump of Hydraulic-Cement Concrete
C 150	Standard Specification for Portland Cement
C 171	Standard Specification for Sheet Materials for Curing Concrete
C 172	Standard Practice for Sampling Freshly Mixed Concrete
C 173	Standard Test Method for Air Content of Freshly Mixed Concrete by Volumetric Method
C 192	Standard Practice for Making and Curing Concrete Test Specimens in Laboratory
C 231	Standard Test Method for Air Content of Freshly Mixed Concrete by Pressure Method
C 260	Standard Specification for Air-Entraining Admixtures for Concrete
C 309	Standard Specification for Liquid Membrane-Forming Compounds for Curing Concrete
C 330	Standard Specification for Lightweight Aggregates for Structural Concrete
C 387	Standard Specification for Packaged, Dry, Combined Materials for Mortar and Concrete
C 494	Standard Specification for Chemical Admixtures for Concrete

C 567	Standard Test Method for Density of Structural Lightweight Concrete
C 595	Standard Specification for Blended Hydraulic Cements
C 597	Standard Test Method for Pulse Velocity Through Concrete
C 618	Standard Specification for Coal Fly Ash and Raw or Calcined Natural Pozzolan for Use as Mineral Admixture in Portland Cement Concrete
C 684	Standard Test Method for Making, Accelerated Curing, and Testing Concrete Compression Test Specimens
C 685	Standard Specification for Concrete Made By Volumetric Batching and Continuous Mixing
C 803	Standard Test Method for Penetration Resistance of Hardened Concrete
C 805	Standard Test Method for Rebound Number of Hardened Concrete
C 873	Standard Test Method for Compressive Strength of Concrete Cylinders Cast in Place in Cylindrical Molds
C 881	Standard Specification for Epoxy-Resin-Base Bonding Systems for Concrete
C 900	Standard Test Method for Pullout Strength of Hardened Concrete
C 928	Standard Specification for Packaged, Dry, Rapid Hardening Cementitious Materials for Concrete Repairs
C 989	Standard Specification for Blast Furnace Slag
C 1017	Standard Specification for Chemical Admixtures for Use in Producing Flowing Concrete
C 1059	Standard Specification for Latex Agents for Bonding Fresh to Hardened Concrete
C 1064	Standard Test Methods for Temperature of Freshly Mixed Portland Cement Concrete
C 1074	Standard Practice for Estimating Concrete Strength by Maturity Method
C 1077	Standard Practice for Laboratories Testing Concrete and Concrete Aggregates for Use in Construction and Criteria for Laboratory Evaluation
C 1150	Standard Test Method for Break-Off Number of Concrete
C 1218	Standard Test Method for Water-Soluble Chloride in Mortar and Concrete
C 1240	Standard Specification for Silica Fume for Use in Hydraulic-Cement Concrete, Mortar, and Grout
C 1315	Standard Specification for Liquid Membrane-Forming Compounds Having Special Properties for curing and Sealing Concrete
D 98	Standard Specification for Calcium Chloride
D 994	Standard Specification for Preformed Expansion Joint Filler for Concrete (Bituminous Type)
D 1621	Standard Test Methods for Compressive Properties of Rigid Cellular Plastics
D 1751	Standard Specification for Preformed Expansion Joint Fillers for Concrete Paving and Structural Construction (Non-extruding and Resilient Bituminous Types)
D 1752	Standard Specification for Preformed Sponge Rubber and Cork Expansion Joint Fillers for Concrete Paving and Structural Construction
D 3575	STANDARD TEST METHODS FOR FLEXIBLE CELLULAR MATERIALS MADE FROM OLEFIN POLYMERS
E 329	Standard Specification for Agencies Engaged in Testing and/or Inspection of Materials Used in Construction

E 1155	Standard Test Method for Determining Floor Flatness and Levelness Using F-Number System

Other referenced standards

ANSI	Structural Welding Code - Steel Reinforcing AWS D1.4
CRD-C 513-74	Specification for Rubber Waterstops
CRD-C 572-74	Specification for Polyvinyl Chloride Waterstops

B. Cited publications - Publications cited in this Section:

ACI 318	Building Code Requirements for Reinforced Concrete
ACI CP1	ACI Certification Concrete Field Testing Technician-Grade I
ACI SP-15	Field Reference Manual
CRSI MSP-1	Manual of Standard Practice, Current Edition

C. Field references - Keep copies of the following references in Contractor's field office:

SP-15	Field Reference Manual: Specification for Structural Concrete (ACI 301) with Selected ACI and ASTM References

1.3 DEFINITIONS

A. *ACI Concrete Field Testing Technician Grade 1* - Personnel who have demonstrated knowledge and ability to perform and record results of ASTM standard tests on freshly mixed concrete and to make and cure test specimens. Knowledge and ability shall be demonstrated by passing prescribed written and performance examinations and having credentials that are current with American Concrete Institute.

B. *Architectural concrete* - Concrete that is exposed as an interior or exterior surface in completed structure and is designated as architectural concrete in Contract Documents; contributes to visual character of completed structure and therefore requires special care in selection of concrete materials, forming, placing, and finishing to obtain desired architectural appearance.

C. *Backshores* - Shores placed snugly under concrete slabs or structural members after original formwork and shores have been removed from various areas without allowing slabs or members to deflect or support its own weight or existing construction loads from above.

D. *Contract Documents* - Documents, including Project Drawings and Project Specifications, covering required Work. Refer to Conditions Of Contract.

E. *Exposed to public view* - Situated so that it can be seen from public locations after building completion.

F. *High-early-strength concrete* - Concrete that, uses ASTM C 150 Type III cement or admixtures, and is capable of attaining specified strength at earlier ages than normal concrete.

G. *Mass concrete* - Any volume of concrete with dimensions large enough to require that measures be taken to cope with generation of heat from hydration of cement and attendant volume change

to minimize cracking. Concrete 2 feet or more in thickness shall be classified as mass concrete unless otherwise shown in Contract Documents.

H. *Mass concrete, plain* - Mass concrete containing no reinforcement or less reinforcement than necessary to be considered reinforced mass concrete.

I. *Mass concrete, reinforced* - Mass concrete containing adequate reinforcement and designed to act together with concrete in resisting forces including those induced by temperature and shrinkage.

J. *Normal Weight Concrete* - Concrete having densities of roughly 150 pounds per cubic foot made with gravel or crushed stone aggregates.

K. *Reference specification* - Specifications that are intended by Registered Design Professional to be reference standards for Contractor to use in constructing projects by citing reference specifications in Contract Documents, together with project requirements.

L. *Reference standards* - Standards of technical societies, organizations, or associations, including codes of local or state authorities that are referenced in Contract Documents.

M. *Reshores* - Shores placed snugly under stripped concrete slabs or other structural members after original forms and shores have been removed from areas, thus requiring new slabs or structural members to deflect and support its own weight and existing construction loads applied before installing reshores.

N. *Strength test* - Compressive strength average of two cylinders made from one sample of concrete and tested at 28 days or at test age designated for determination of specified compressive strength.

O. *Structural lightweight concrete* - Structural concrete made with lightweight aggregate; density usually between 90 to 115 pounds per cubic foot.

P. *Work* - entire construction or separately identifiable parts thereof that are required to be furnished under Contract Documents; Work is result of performing services, furnishing labor, and furnishing and incorporating materials and equipment into construction in accordance with Contract Documents.

1.4 SYSTEM DESCRIPTION

A. Completed concrete work shall conform to applicable requirements of this Specification and Contract Documents.

B. Concrete work that fails to meet one or more requirements of Contract Documents but is repaired using specified methods or methods approved by Registered Design Professional to bring concrete into compliance will be accepted without qualification.

C. Concrete work that fails to meet one or more requirements of Contract Documents and cannot be brought into compliance will be rejected and shall be removed from site. Non-compliant concrete shall be replaced with satisfactory work or reinforced.

D. Submit for acceptance proposed repair methods, materials, and modifications needed to ensure that concrete work shall meet requirements of Contract Documents.

E. Contractor shall pay costs to bring concrete work into compliance with requirements of Contract Documents.

F. Members cast in wrong location may be rejected.

G. Formed surfaces resulting in concrete outlines smaller than permitted by tolerances of ACI 117, may be considered deficient in strength and subject to provisions of Paragraph 1.4.L.

H. Formed surfaces resulting in concrete outlines larger than permitted by ACI 117 may be rejected. Remove excess materials when required by Registered Design Professional.

I. Inaccurately formed concrete surfaces that exceed ACI 117 tolerances may be rejected.

J. Concrete not matching appearances of sample finishes on sample panels shall be brought into compliance.

K. Concrete strength will be considered satisfactory if averages of specimens of three consecutive strength test results performed at specified age equal or exceed specified compressive strength test result is below specified compressive strength by more than 500 pounds per square inch.

L. Strength of Structure will be considered deficient and concrete work will be rejected when Work fails to comply with requirements that control structure strength including, but not limited to, the following conditions:
   1. Concrete strength failing to comply with requirements of stated design criteria as measured by average compressive strength of standard molded strength specimens.
   2. Reinforcing steel size, quantity, strength, position, or arrangement at variance with requirements stated in Contract Documents.
   3. Concrete elements that differ from required dimensions or location.
   4. Curing not in accordance with Contract Documents.
   5. Inadequate protection of concrete from extreme temperature and other environmental conditions during early stages of hardening and strength development.
   6. Mechanical injury, construction fires, accidents, or premature removal of formwork resulting in deficient strength.

1.5 SUBMITTALS

A. General
   1. Furnish submittals for items that are identified in this Section by different typefaces and bracketed codes (e.g., Item [D]). Refer to Section 01340 for code definitions, submittal

types, and administrative requirements governing submittal procedure. Additional submittals required by this Section are specified under this Article.

B. Submit product data or manufacturer's specifications and installation instructions. Include laboratory test reports and other data to show compliance with specifications (including specified codes and ASTM standards) and Material Safety Data Sheets for following:
   1. *Cement [P]*:, including type, class, manufacturer, and plant location.
   2. *Coarse and fine aggregates [P]*:, including type, pit or quarry location, producer, gradation, and specific gravity.
   3. *Admixtures [P]*:
   4. *Column isolation joint forms [P]*:
   5. *Expansion joint fillers [P]*:
   6. *Curing materials and methods [P]*:
   7. *Bonding agents [P]*:
   8. *Waterstops [P]*:
   9. *Perimeter insulation below grade [P]*:
   10. *Formwork Release Agents [P]*:
   11. *Vapor Retarder [P]*:
   12. *Vapor Barrier [P]*:

C. *Concrete Reinforcing Shop Drawings [D]*: Submit shop drawings for concrete reinforcing, including complete details for fabricating, bending, and placing. Include reinforcement sizes and grade; fabricated dimensions; location of reinforcing bars or wire mesh; lap requirements and lengths; splices; concrete cover; and bar support spacings and location.

D. *Concrete Mix Design [T]*: Submit laboratory test reports for qualifying proposed concrete materials and establishing concrete mix designs.
   1. Demonstrate by test or previous field experience that mixing water, including that contributed by aggregates, and any admixtures used shall not contain deleterious quantity of chloride ions.
   2. Submit concrete mix design information for each proposed concrete mix. Submit information on standard mix design submittal forms printed at end of this Section. Information can be submitted on concrete supplier formatted sheets if required information is provided. Include information about:
      a. Cement, coarse aggregates, fine aggregates, mineral admixtures (fly ash or ground granulated blast furnace slag) and water supply.
      b. Chemical admixtures containing manufacture’s name, brand, proposed use, and chloride content.
      c. Selection of concrete mix proportions based in either trial laboratory data or historical field test records used to establish required average strength in accordance with ACI 301.
      d. Aggregate gradations including producers name, pit and quarry locations, and specific gravities. Include dated information that shows that information is not more than ninety (90) days old.

e. When historical field test records are used as basis for selecting proportions for concrete mix, include data on materials and mixture proportions confirming conformance.

E. *Hot and Cold Weather Concrete Placement Procedure [R]*: Submit detailed procedures for producing, transporting, placing, protecting, curing, and monitoring temperature of concrete during hot and cold weather.

1. Include what preparations will be made for abrupt changes in weather conditions or equipment failures and procedures to be implemented.
2. The submittal shall include, but is not limited to, following:
   a. Procedures for protecting subgrade from frost and accumulation of ice or snow on reinforcement or forms before concrete placement. Include methods for removing frost, ice, or snow in event they accumulate before precautions are implemented or precautions proves to be inadequate.
   b. Methods of temperature protection during placement.
   c. Types of covering, insulation, housing, heating, or cooling to be provided.
   d. Curing methods to be used during and following protection period.
   e. Use of retarding or accelerating admixtures.
   f. Methods for verification of in-place strength other than those instances noted as being provided by Owner.
   g. Procedures for measuring and recording concrete temperatures after placement.
   h. Procedures for preventing excessive evaporation during hot, dry, or windy conditions.
3. Use of admixtures shall not be first or second option planned or used to address hot or cold weather during concreting operations. First and second options planned and used shall be either concrete mixes specially designed for hot or cold weather, control of concrete temperature when placed, more extensive curing methods, more extensive protection methods, or longer protection periods.

F. *Concrete Temperature Record [R]*: Submit records of concrete surface temperatures and protection methods implemented during placement and curing for periods when ambient air temperature is outside range of 40-90 degrees F.

G. Quality Assurance/Control Submittals

1. Test Reports
   a. *Concrete Cylinder Test Reports [R]*: Submit preliminary reports within three days of testing to Contractor, Owner’s Representative, and Concrete Supplier. Submit final reports to Owner, Contractor, Owner’s Representative, Registered Design Professional and Concrete Supplier within seven days of test completion.
2. Field reports
   a. *Pouring Schedules, Casting Plan and Records [R]*: Prepare detailed, written event schedules and casting plans with joint locations for Project, and submit to Owner's Representative before starting Work.
      1) Keep written concrete casts records, denoting location, date, cubic yards of concrete including signed trip ticket for each truck, ambient air temperature, and unusual occurrences during each cast placement. Permit records inspection by

Owner’s Representative at any time. At Project completion submit data summary to Owner's Representative.

3. Repair Methods
   a. *Repair Method for Defective Work [R]*: Submit documentation of methods and materials used for repairing or reinforcing of noncompliant Work.

1.6 QUALITY ASSURANCE

A. Qualifications
   1. Contractor shall furnish, construct, and install Work in accordance with provisions in recent editions of ACI, ASTM and AWS reference standards listed in Part 1 General unless otherwise noted.
   2. Contractor shall secure and pay for testing agency services to perform laboratory tests necessary for qualifying proposed concrete materials, establishing concrete mix designs and any other testing services as needed or required by Contractor for proper execution of his Work. Testing Agency shall perform tests noted in accordance with ACI 301 Section 1.
   3. Owner will secure and pay for testing agency services to evaluate concrete construction, test concrete materials and samples during construction, inspect preparations for concrete placement, and perform tests, inspections and procedures noted in accordance with ACI 301 Section 1.
      a. The Testing Agency shall report items of nonconformance verbally to Owner’s Representative immediately upon discovery. Final written reports shall be submitted within 7 days for each test or inspection to Owner’s Representative.
      b. The Testing Agency and their representatives are not authorized to revoke, alter, relax, enlarge, or release any requirement of contact documents nor to approve any portion of Work.

B. Testing Agencies that perform testing services on concrete materials shall meet ASTM C1077 requirements. Testing Agencies that perform testing services on reinforcing steel shall meet ASTM E 329. Concrete Field Tests required by Contractor or Owner shall be made by an ACI Concrete Field Testing Technician Grade 1 per ACI CPI or equivalent. Equivalent certification programs shall include requirements for written and performance examinations as stipulated in ACI publication CPI.

C. *Testing Agencies Qualifications [Q]*: Submit proposed testing agency qualification data for review.
   1. Tests on hardened concrete in place.

1.7 DELIVERY, STORAGE AND HANDLING

A. Prevent, coating with earth, oil, or other material. Prevent bending or damaging reinforcement.

B. For handling coated reinforcement, use equipment having contact areas padded to avoid damaging coating. Lift bundles of coated reinforcement at multiple pick-up points to prevent bar-to-bar abrasion from sags in bundles. Do not drop or drag coated reinforcement. Store coated reinforcement on cribbing that will not damage coating.

C. Store Welded Wire Fabric Reinforcing Mats to avoid contact with soils or surface moisture.

PART 2 PRODUCTS

2.1 FORM MATERIALS AND ACCESORIES

A. Form facing materials. Materials for form faces in contact with concrete shall meet the following requirements unless otherwise specified in Contract Documents.
   1. For rough form finish - No form-facing material is specified.
   2. For smooth form finish - Use plywood, tempered concrete form grade hardboard, metal, plastic, paper, or other acceptable materials capable of producing desired finish for form-facing materials. Form-facing materials shall produce smooth, uniform textures on concrete. Do not use form-facing materials with raised grain, torn surfaces, worn edges, patches, dents, or other defects that impairs texture of concrete surfaces.

B. Formwork accessories. Use commercially manufactured accessories for formwork accessories that are partially or wholly embedded in concrete, including ties and hangers. Do not use non-fabricated wire form ties. Where shown in Contract Documents, use form ties with integral water barrier plates in walls.

C. Formwork release agents. Use commercially manufactured formwork release agents with maximum 3 pounds per gallon VOC's that prevents formwork absorption of moisture, prevent bond with concrete, and not stain concrete surfaces.
   1. Form release coat shall be non-residual and shall be compatible with protective coatings and waterproofing scheduled for application to concrete surfaces. Coatings shall not prevent bonding later work to concrete.

D. Circular concrete forms
   1. Provide circular concrete forms for column encasement and where shown. Forms shall be metal, glass-fiber reinforced plastic or fiber tubes that produce smooth surfaces without joint indications. Forms shall have sufficient wall thickness to resist wet concrete loads without deformation.
      a. The Burke Company "BurkeTube Column Forms"
      b. Alton Building Products "Sleektubes"
      c. Sonoco Products Company "Sonotube Fiber Forms"
      d. Symons Corporation "Springform"
      e. Deslauriers Column Mould Company "Econ-O-Mold"

2.2 REINFORCING MATERIALS AND ACCESSORIES

A. Reinforcing bars. Use deformed bars as reinforcement conforming to ASTM A 615, A 616, or A 617.

B. Steel Wire: ASTM A 82 cold-drawn steel wire for concrete reinforcement.

C. Welded Wire Reinforcement: ASTM A185 welded wire for concrete reinforcement.
   1. In flat sheets for wire 0.192 inches in diameter and larger.
   2. In rolls for wire less than 0.192 inches diameter.

D. Deformed Welded Wire Reinforcement: ASTM A497 deformed welded wire for concrete reinforcement.
   1. In flat sheets for wire 0.192 inches in diameter and larger.
   2. In rolls for wire less than 0.192 inches in diameter.

E. Wire reinforcement supports. Unless otherwise specified or permitted, use wire reinforcement supports complying with Class 1, maximum protection, or Class 2, moderate protection as shown in Chapter 3-Bar Supports of CRSI Manual of Standard Practice.

2.3 FIBER REINFORCEMENT

A. Steel Fibers - Provide high strength, drawn wire, steel fibers conforming to ASTM A-820, Type I, with 120,000 pounds per square inch minimum yield, 2-inches minimum length, and minimum aspect ratio of 60. Use between 30 and 75 pounds of fibers per cubic yard.
   1. Supply Contractor with waterproof copies of instructional charts or tables clearly showing site-added admixture quantities and steel fiber bags to be added to various cubic yard quantities of concrete (full and partial loads) which may be delivered to site.
   2. Subject to compliance with requirements, products incorporated in Work are limited to following:
      a. Bekaert Corporation “Dramix”
      b. Fibercon International, Inc.
      c. Novocon International, Inc. “Xorex”

2.4 CONCRETE MATERIALS

A. Cementitious materials. Use cementitious materials that are of same brand and type and from same plant of manufacture as cementitious materials used in concrete represented by submitted field test records or used in trial mixtures.
   1. Cement. Cement materials shall conform to ASTM C 150 Type I, Type II or type III.
      a. Use Type I for standard (28-day) strength concrete
      b. Use Type II for mass concrete
      c. Use Type III for high early (7-day) strength
   2. Fly ash pozzolonic mineral admixture conforming to ASTM C 618, Type C or F with 3 percent maximum carbon content. When fly ash is used, minimum quantity shall be 15 percent by weight of total cementitious materials, unless otherwise specified.
   3. Ground granulated blast furnace slag mineral admixture conforming to ASTM C 618.
   4. Silica fume mineral admixture conforming to ASTM C 1240.

B. Aggregates. Aggregates shall conform to ASTM C 33, unless otherwise specified. When single size or combination of two or more sizes of coarse aggregates is used, final grading shall conform to grading requirements of ASTM C 33, unless otherwise specified or permitted.
   1. Aggregates used in concrete shall be obtained from same sources and have same size ranges as aggregates used in concrete represented by submitted historical data or used in trial mixtures.
   2. Do not use aggregates that are classified as "moderate stain" or darker, when tested for staining.
   3. Maximum aggregate size for mass concrete shall be 2 inches. Furnish in two separate component sizes until mixing in concrete.
   4. Maximum aggregate size shall be 3/8 inch for:
      a. Concrete steel stair pan fill.
      b. Concrete floor topping, less than 2 inches thick.
      c. Concrete pipe posts and column fill.
      d. Concrete with under floor ducts.
   5. Materials
      a. Coarse aggregates for normal weight concrete shall be crushed stone, crushed gravel, or washed gravel conforming to ASTM C 33, including Table 2 for Gradation and Table 3 for Deleterious Substances and Physical Property Requirements.
      b. Coarse aggregate for lightweight aggregate for lightweight concrete shall be expanded shale, or clay coarse aggregate conforming to ASTM C 330. Use 100 percent lightweight coarse aggregate or lightweight mixture and normal weight aggregate to provide concrete that does not exceed maximum air-dry weight.
      c. Fine aggregate shall be natural sand conforming to ASTM C 33.

C. Water and Ice. Mixing water for concrete and water used to make ice shall meet requirements of ASTM C 94.Unless otherwise specified or permitted, use moderate heat of hydration Portland cement, blended hydraulic cement with moderate or low heat of hydration properties, or Portland cement with fly ash, pozzolan.

D. Change of Materials. When brand, type, size, or source of cementitious materials, aggregates, water, ice, or admixtures are proposed to be changed, new field data or data from new trial mixtures or evidence that shows that change does not adversely affect relevant properties of concrete mix.

E. Air-Entraining Admixture. Shall conform to ASTM C260, including certification that chloride was not added during manufacture.
   1. Euclid Chemical Co. “Air Mix, AEA-92, or Air Mix 200”
   2. Grace Construction Products “Darex II AEA or Daravair 1000”
   3. Master Builders “Micro-Air”
   4. Sika Corp. “Sika AER”

F. Water-Reducing Admixture. Shall conform to ASTM C494, Type A, with certification that chloride was not added during manufacture. admixture shall be used when ambient temperature is between 50 and 85 degF.
   1. Euclid Chemical Co. “Eucon WR 75,”

2. Grace Construction Products “WRDA-20 or WRDA-82”
3. Sika Corp. “Plastocrete 161 or Plastiment NS”

G. Water-Reducing, Retarding Admixture. Shall conform to ASTM C494, Type D, with certification that chloride was not added during manufacture. Admixture shall be used when
1. Ambient temperature at time of placement is above 85degF.
2. Necessary to prevent cold joints because placed concrete quantity is large.
3. Necessary to offset high concrete temperature effects or temperature rises.
4. Mass concrete is shown.
   a. Euclid Chemical Co. “Eucon Retarder-75”
   b. Grace Construction Products “Daratard-17”
   c. Master Builders “Rheobuild”(reduced dosage)

H. Accelerating Admixture. Shall conform to ASTM C494, Type C or E, with certification that admixture is non-chloride and non-corrosive. Use in slabs less than 8 inches thick when ambient air temperature is below 50 degF and when required by finishing operations,
1. Euclid Chemical Co. “Accelguard 80”
2. Grace Construction Products “Daraset”
3. Master Builders “Pozzutec 20”

I. Water reducing admixtures termed "mid-range" conforming to ASTM C 494 Type A or Type F may be used but only with prior Registered Design Professional approval
1. Grace Construction Products "Daracem 50 & 55".
2. Master Builders, Inc. "PolyHeed 997".
3. Euclid Chemical Company "Eucon MR”.

J. High-range water-reducing admixture (superplasticizer) shall conform to ASTM C 494, Type F or G. High-range water reducing admixture may be used for:
1. Concrete that is pumped.
2. Water-tightness.
3. Water-cement ratios below 0.45.
   a. Euclid Chemical Company "Eucon 37".
   b. Grace Construction Products "Daracem-100".
   c. Master Builders, Inc. "Rheobuild 1000, or Conchem SPN,”

K. Water Proofing Admixture
1. Cystalline Water Proofing Admixture for concrete where indicated on drawings. Dosage and application per manufacturers recommendations.
   a. XYPEX Admixture – XYPE Chemical Corporatin.

2.5 FINISH MATERIALS

A. Non-Slip Finish. Crushed natural emery ore containing not less than 50 percent aluminum oxide and not less than 21 percent ferric oxide with specific gravity of 3.5, absorption of 0.6 and Mohr hardness of 8 to 9, uniformly graded within 3/8 inch to fine sieve limits. Aggregates shall be factory packaged from one source and shall not be blended.
1. Dayton Superior “Emery-Tuff”

2. Sternson “Emeri-Crete”
3. L&M Construction Chemicals “Emery Plate II”

B. Liquid Hardeners
1. Curecrete Chemical Company Inc. “Ashford Formula”
2. Euclid Chemical Company “Euco Diamond Hard or Surfhard”
3. Dayton Superior “J-17 Day-Chem Sure Hard
4. Sonneborn Building Products “Sonneborn Kure-N-Harden”
5. W.R. Meadows, Inc. “Liquidhard”
6. L & M Construction Chemicals “Fluohard”
7. Sonneborn Building Products “Lapidolith”

2.6 CURING MATERIALS

A. Absorptive cover. AASHTO M182, Class 2, burlap cloth made from jute or kenaf, weighing at least 9 ounces per square yard, or other Registered Design Professional approved alternate.

B. Geosynthetic Cloth for Wet Curings.
1. Terrafix “240R”
2. Mirafi

C. Waterproof sheet materials. Use waterproof sheet materials conforming to ASTM C 171. Materials shall be waterproof paper, polyethelene firm or burlap-polyethelene material with moisture loss of no more than 0.06 pounds per square foot when tested in accordance with ASTM C 156.
1. Minimum 4 mils thick, complying with maximum allowable moisture loss requirements of ASTM C156.

D. Water-based acrylic membrane curing compounds. Use water based acrylic membrane curing compound conforming to ASTM C 309, Type I, Class B. Curing compounds shall have maximum 3 pounds per gallon VOC’s, minimum solids context of 30 percent and moisture loss of no more than 0.06 pounds per square foot when tested in accordance with ASTM C 156.
1. Dayton Superior “Safe Cure & Seal (J-19)”
2. Euclid Chemical Company “Super Aqua-Cure VOX”
3. L&M Construction Chemicals “Dress & Seal WB 30”
4. Sonneborn Building Products “Kure 1315”
5. Master Builders, Inc. “MasterKure 200W”

E. Non-residual cure.
1. Dayton Superior “J-13 Day-Chem Sil Cure”
2. Euclid Chemical Company “Eucosil”
3. L & M Construction Chemicals “L & M Cure”
4. Sonneborn Building Products “Sonneborn Sonosil”
5. W.R. Meadows, Inc. “Med-Cure”

F. Dissipating resin type cure.
1. Dayton Superior “J-11 Day-Chem Rez Cure”

2. Euclid Chemical Company “KUREZ DR VOX”
3. L & M Construction Chemicals “L & M Cure R”
4. W.R. Meadows, Inc. “1100 Clear”

2.7 RELATED MATERIALS

A. Epoxy joint sealant for regular sawcut joints shall be cold-applied, epoxy compound with minimum Shore D hardness of 50.
   1. Dayton Superior “J-52 Poxy-Fil”
   2. Euclid Chemical Company “Euco 700”
   3. Metzger McGuire Company “MM-80”
   4. W.R. Meadows, Inc. “Sealtight Rezi-Weld Flex”
   5. Master Builders “Masterfil 300i”

B. Expansion joint filler.
   1. Premolded expansion joint filler conforming to ASTM D 994, D 1751, or D 1752.
      a. W.R. Meadows, Inc. "Ceramar"
      b. Sonneborn “Expansion Joint Filler”Sonoflex F

C. Expanding foam joint filler.
   1. Provide in compressed thickness as recommended by manufacturer to fill and seal joints.
      a. Emseal Joint Systems, Ltd. "Emseal 20H".
      b. Illbruck/USA "Will-Seal".

D. Expansion joint sealant.
   1. Cold-applied, coal-tar-modified urethane compound. Use primer as recommended by sealant manufacturer. Use same material in vertical joints, as horizontal joint continuation, unless otherwise noted. However, use non-sag vertical grade compound.
      a. Elastomeric joint sealant over premolded joint filler in interior concrete and for sawcuts in suspended floor slabs shall be cold-applied 2-component polyurethane modified:
         1) Euclid Chemical Company “Eucolastic II”
         2) Sika Chemical Company “Sikaflex 2C NS/SL”
         3) W.R. Meadows “sealtight Pourthane”
         4) Tremco “Vulkem 245”
         5) Sonneborn “Sonolastic SL2”
      b. Elastomeric joint sealant over premolded joint filler in exterior concrete shall be cold applied, coal tar modified urethane compound. Use primer recommended by sealant manufacturer:
         1) W.R. Meadows, Inc. "Sealtight Gardox".
         2) Pecora Corporation "Urexpan NR-300".

E. Waterstops. Materials shall conform to requirements of CRD C 513 for rubber waterstop or CRD C 572 for polyvinylchloride waterstop. Make splices in waterstops and use molded pieces as recommended by manufacturer.
   1. Flexible-strip bentonite waterstop. Provide 1 inch by ¾ inch size, placed on interior side of outermost reinforcing and in other locations as shown, for concrete provide 6 inches thick or less, use smaller size strip to prevent concrete blowout:
      a. Colloid Environmental Technologies Company "Waterstop RX"
      b. Tremco "Superstop"
   2. Vinyl or SBR flat dumbbell waterstop. Provide 6-inch wide size throughout except at expansion joints use 9-inch wide size with hollow, tubular center. Provide in joints except where flexible bentonite type is shown or specified.
      a. Greenstreak Plastic Products
      b. Vinylex Corporation
      c. W.R. Meadows, Inc.

F. Chemical Bonding Compounds.
   1. Provide where shown for concrete exposed to weather and for interior use where bonded surface is subject to water, steam or vibration.
      a. Dayton Superior "Resi-Bond J58"
      b. Master Builders, Inc. "Concresive Liquid LPL or Concresive 1090"
      c. Euclid Chemical Company "Epoxy No. 452"
      d. Sika Corporation "Sikadur 32 Hi-Mod"
      e. W.R. Meadows, Inc. "Rezi-Weld 1000"
   2. Bonding Agents for interior use not described above in foregoing paragraph.
      a. Dayton Superior "J-41 Superior Concrete Bonder"
      b. Euclid Chemical Company "Euco Weld":"
      c. L&M Construction Chemicals "Everweld"

G. Vapor Retarder.
   1. Flexible, preformed sheet membrane having water-vapor permeance rate of no greater than 0.012 perms when tested in accordance with ASTM E 154, Section 7, and otherwise conforming to ASTM E 1745, Class B or higher. Vapor barrier shall be no les than 10 mils thick.
      a. Stego Industries, LLC "Stego Wrap Vapor Barrier (10 mil)"
      b. Reef Industries "Griffolyn Vaporguard"

H. Evaporation Control Compound.
   1. Molecular film-forming compound applied to exposed concrete surfaces for temporary protection from rapid moisture loss.
      a. Conspec Marketing and Manufacturing Company "Aquafilm"
      b. Euclid Chemical Company "Eucobar"
      c. L&M Construction Chemicals "E-Con"
      d. Master Builders, Inc. "Confilm"

I. Corrosion and Chemical Resistant Coating

1. Two component 100% Solids, polymer system coating for corrosion and chemical resistance, where shown on drawings. Scrape sandblast or scarify and prepare all surfaces per manufacturer's instructions. Apply primer and final coating per manufacturers recommendations.
   a. Chemclad P42 Primer and Chemclad SC Coating system by ENECON or approved equal.
2. All products shall be applied by manufacturer authorized application personnel.
3. Submit applicable procedure, safety plan, per General Conditions GC-7 and GC-8 and obtain approval.

2.8 PROPORTIONING AND DESIGNING CONCRETE MIXES

A. Prepare mix designs for each type and strength of concrete as shownin Table 1 and 2 below or in Contract Documents. Use proportioning on basis of previous field experience or trial mixtures, in accordance with ACI 301 Section 4. Proportion solid materials by weight, not by volume. Liquids may be proportioned by weight or volume. Proportioning based on empirical data is not permitted.

Table 1

USE, STRENGTH, AND AIR REQUIREMENTS

Location	Typical Uses	Strength, psi	Air Entrainment Required
Supporting Structure	Interior Beams, Columns	4,000	No
Supporting Superstructure	Exterior Beams, Columns	4,000	Yes
Weight Bearing Slabs	Interior Floor slabs, Slabs on Grade	4,000	No
Exposed Top Slabs	Exterior Pads, Tank Tops	4,000	Yes
Sub Grade	Spread Footings, Grade Beams	3,500	No
Sub Grade	Exposed Grade Walls	3,500	Yes
Excavation and Fills	Fill, Pipe Encasement	2,000	No
Pit Walls		4,000	No
Pit Slabs		4,000	No
Mass Concrete		3,000	No

B. Proportion and design mixes so that minimum compressive strength, minimum cement factor and maximum slump is as follows:

Table 2

REQUIRED STRENGTHS, CEMENT FACTOR, AND SLUMPS

Type	Compressive Strength (28 days, psi)	Cement Factor (lbs./c.y.)	Slump**
Standard, Normal Wt.	4000 min.	560 min.	4”
Floor Slab	4000 min.	560 min.	4”
Air Entrained, Normal Wt.	4000 min.	560 min.	4”
Standard, Normal Wt.	3500 min.	530 min.	4”
Air Entrained, Normal Wt.	3500 min.	530 min.	4”
Concrete Fill and Mud Mat	2000 min.	350 min.	4”

** Slump shall be 4-inches maximum at point of placement unless specified or permitted. Slump levels shown in table above may be increased to 8 inches plus or minus 1 inch by using specified high-range water-reducing admixture (superplasticizer) use. Installing Contractor shall be responsible for adding high-range water-reducing admixture to increase slump and improve workability.

C. Mix design shall incorporate fly ash up to 20% or ground granulated blast furnace slag up to 60%.

D. Proportion and design mixes for normal weight concrete (except slabs on grade) that results in air contents from 2 to 4 percent. Concrete where identified in Table 1 or exposed to exterior conditions subject to freezing and thawing; severe weathering; or deicers shall be air entrained having an air content of 6 percent plus or minus 1 percent.

E. Proportion and design mixes that result in fresh concrete with adequate workability and proper consistency to be readily worked into forms and around reinforcing without segregation or excessive bleeding under conditions of placement.

F. Proportion and design mixes that result in hardened concrete with total water soluble chloride ion content at 28 to 42 days as noted in ACI 301 Section 4 when tested in accordance with ASTM C 1218. Admixtures shall contain no added chlorides.

G. Maintain maximum water/cement ratios for the following conditions:
   1. Concrete subject to freezing and thawing – 0.50
   2. Concrete subject to deicers or required to be watertight – 0.45

3. Reinforced concrete subjected to brackish water or salt spray – 0.40
4. Floor slabs – 0.45 to 0.48

PART 3 EXECUTION

3.1 SUBGRADE PREPARATION

A. Recompact subgrade using methods, materials, equipment and procedures specified in Section 02200 – Earth Work before placing reinforcing steel. Place compacted base material over prepared subgrade as specified.

B. Provide protection course consisting of lean concrete fill or compacted coarse aggregate fill to protect subgrade from damage attributable to water or construction operations.

C. Place vapor retarders in location as specified.

3.2 FORMWORK

A. Unless otherwise specified in Contract Documents, construct formwork so concrete surfaces conform to tolerance limits of ACI 117. class of surface for offset between adjacent pieces of formwork facing material shall be Class A for surfaces permanently exposed to public view and Class C for surfaces that are permanently concealed, unless otherwise specified.

B. Use forms whenever necessary to confine concrete and shape it to required dimensions. Design, erect, support, brace, and maintain formwork to support vertical, lateral, static, and dynamic loads that might be applied, until concrete structure is capable of supporting applied loads. Also, meet local building code requirements for allowable stresses and for other loads, including live loads and wind loads. Provide formwork so as not to damage existing structures.

C. Clean interior surfaces of forms and interior form accessories of accumulated mortar or grout and other foreign material before each use.

D. Earth cuts shall not be used as forms for surfaces unless otherwise noted or approved by Registered Design Professional.

E. Construct and maintain formwork so completed concrete members and structures are within specified tolerance for size, shape, alignment, elevation, location, plumbness, and levelness. Camber formwork to compensate for anticipated deflections in formwork before concrete hardens or provide positive means of adjustment by wedges or jacks. If wood forms are used, provide means of adjustment to counteract swelling of forms where necessary.

F. For architectural concrete surfaces, except those to receive applied or exposed aggregate finishes, provide formwork that produces surfaces that require little dressing to arrive at true surfaces.

G. For concrete surfaces with textured or exposed aggregate finishes, use formwork materials and construction methods to duplicate mockup panels.

H. Provide temporary access openings in forms for cleaning and inspection where interior areas of formwork would otherwise be inaccessible immediately before concrete placement.

I. Position and support expansion joint materials, water stop s, and other embedded items to prevent displacement. Fill voids in sleeves, inserts, and anchor slots temporarily with readily removable material to prevent entry of concrete into voids.

J. Cover surfaces of formwork with an acceptable material that prevents bonding with concrete. Field-applied formwork release agents or factory-applied liners may be used. If formwork release agents are used, apply to surfaces of formwork in accordance with manufacturer's recommendations before placing reinforcing steel. Do not allow formwork release agent to puddle in forms. Do not allow formwork release agent to contact reinforcing steel or hardened concrete against which fresh concrete is placed.

K. Place 3/4-inch minimum chamfer strips in corners of formwork to produce beveled edges on permanently exposed surfaces unless otherwise specified. Do not bevel re-entrant corners or edges of formed joints of concrete unless specified in Contract Documents.

L. Fabricate form ties so ends or end fasteners can be removed with minimum spalling at faces of concrete.

M. Design and engineering of formwork shall be responsibility of Contractor. When required by Contract Documents, design calculations for formwork and formwork drawings shall be sealed by a Professional Engineer licensed in state where Work is done.

N. Maximum deflection of facing materials reflected on concrete surfaces exposed to public view shall be 1/240 of span between structural members of formwork.

O. When finishing is required, remove forms as soon as removal operations will not damage concrete.

P. Unless otherwise specified, leave formwork and shoring in place to support weight of concrete in beams, slabs, and in-place structural members until concrete has reached specified compressive strength. If lower compressive strength is proposed for removal of formwork and shoring, submit detailed plans for review and acceptance. When shores and other vertical supports are arranged to allow form-facing material to be removed without loosening or disturbing shores and supports, facing material may be removed at an earlier age unless otherwise specified.

Q. When removal of formwork or reshoring is based on concrete reaching specified compressive strengths, concrete shall be presumed to have reached this strength when test cylinders, field cured same as concrete they represent, have reached compressive strength specified for removal of formwork or reshoring. Mold cylinders in accordance with ASTM C 31, and cure them

under same conditions for moisture and temperature as used for concrete they represent. Test cylinders in accordance with ASTM C 39.

3.3 STEEL REINFORCEMENT

A. When concrete is placed, reinforcement shall be free of materials deleterious to bond. Reinforcement with rust, mill scale, or combination of both will be considered satisfactory provided minimum nominal dimensions, nominal weight, and minimum average height of deformations of hand-wire-brushed test specimen are not less than applicable ASTM specification requirements.

B. Place, support, and fasten reinforcement as shown on project drawings. Do not exceed placing tolerances specified in ACI 117 before concrete is placed. Placing tolerances shall not reduce cover requirements except as specified in ACI 117.

C. Do not cut reinforcing in field without approval from Registered Design Professional.

D. Provide minimum concrete cover for reinforcement in accordance with ACI 301 unless otherwise noted.

E. For bundled bars, minimum concrete cover shall be equal to equivalent diameter of bundle but need not be greater than 2 inches except minimum cover shall not be less than specified in ACI 301. equivalent diameter of bundle shall be based on single bar of diameter derived from equivalent total area. Tolerances on minimum concrete cover shall meet requirements of ACI 117.

F. Reinforcement supported from ground or mud mat shall be placed on precast concrete reinforcement supports, or manufactured metal or plastic supports. Chair legs shall bear on continuous sand plates.

G. Reinforcement supported from formwork shall rest on bar supports made of metal or plastic. Masonry, concrete, tile, or wood reinforcement supports on formwork are not permitted. Furnish plastic tips on chair legs at exposed ceilings.

H. Do not use mechanical connections for reinforcing splices unless approved by Registered Design Professional.

I. Bend or straighten reinforcement partially embedded in concrete in accordance with the following procedures. Reinforcing bar sizes No. 3 through No. 5 may be bent cold first time provided reinforcing bar temperature is above 32 deg F. For other bar sizes, preheat reinforcing bars before bending.
   1. Preheating - Apply heat by any method that does not harm reinforcing bar material or cause damage to concrete. Preheat length of reinforcing bar equal to at least five bar diameters in each direction from center of bend but do not extend preheating below surface of concrete. Do not allow temperature of reinforcing bar at concrete interface to exceed 500 deg F.
      a. The preheat temperature of reinforcing bar shall be between 1100 to 1200 deg F.

b. Maintain preheat temperature until bending or straightening is complete.
c. Measure preheat temperature by temperature measurement crayons, contact pyrometer, or other acceptable methods.
d. Do not artificially cool heated reinforcing bars until temperature of bar is less than 600 deg F.

2. Minimum bend diameters shall conform to requirements of ACI 301.

3.4 EMBEDDED ITEMS

A. Waterstops

1. Locate waterstops in joints below grade and in locations as shown.. Use pieces of premolded waterstop with maximum practicable length to hold number of end joints to a minimum. Make joints in waterstops in accordance with manufacturer's recommendations. Ensure that joints develop effective water tightness equal to continuous waterstop material, permanently develop not less than 50 percent of mechanical strength of parent section and permanently retain flexibility.

3.5 JOINTS

A. Locate and install construction and control joints where noted on drawings or approved by Registered Design Professional.

B. Locate and form construction joints that least impair strength of structure and meet requirements of ACI 301. Unless otherwise specified or permitted, locate and detail formed construction joints to the following requirements:

1. Locate construction joints within middle third of spans of slabs, beams, and girders. When beams intersects a girder at this point, offset joints in girders a distance equal to or greater than twice width of beam.
2. Locate joints in walls and columns at underside of floors, slabs, beams, or girders and at tops of footings or floor slabs.
3. Make joints perpendicular to main reinforcement.

C. Continue reinforcing through construction joints, unless otherwise noted.

3.6 CONCRETE MIXING AND DELIVERY

A. Ready-mixed and site-produced concrete suppliers–,unless otherwise specified, shall measure, batch, deliver, and mix concrete materials and concrete in conformance with ASTM C 94.

B. When concrete made by volumetric batching and continuous mixing is acceptable, it shall conform to requirements of ASTM C 685 and shall satisfy requirements of Contract Documents.

C. Concrete shall have specified characteristics in freshly mixed state at point of placing. Ready mixed concrete may be retempered at site using not more than the quantity of water held back at batch plant. Water held back at initial batching shall be distinctly shown on concrete delivery ticket. Only that additional quantity of water shall be permitted for addition at delivery site. Do

not add water to concrete delivered in equipment not acceptable for mixing. Do not retemper site mixed concrete.

D. Concrete Mixes that include high-range water reducing admixtures or steel fiber reinforcing, add admixture or steel fiber reinforcing on site after Testing Agency verifies initial slump.

E. Only concrete mix design with admixtures and their combinations, submitted and approved, shall be used. Substitutions are not permitted.

3.7 CONCRETE PLACEMENT

A. Do not place concrete before receiving notification from Owner's Representative that embedded items required in particular placement have been installed, inspected, and approved.

B. Do not place any concrete without approval of concrete mix from Registered Design Professional.

C. Do not place any slabs-on-grade, pits, or trenches before receiving notification from Owner's Representative that required subgrade construction has been installed, inspected, and approved.

D. Do not place concrete during hot or cold weather without procedures approved by Registered Design Professional and Testing Agency verification of availability of equipment and materials necessary to fully implement procedures.

E. Do not place concrete during rain, sleet, or snow without adequate protection and approval of Registered Design Professional.

F. When high ambient temperatures necessitate protection of concrete immediately after placing or finishing, make provisions before concrete placement for windbreaks, shading, fogging, sprinkling, ponding, or wet covering.

G. During hot weather temperature of concrete as placed shall not exceed 90 degrees F unless otherwise permitted. Loss of slump, flash set, or cold joints due to temperature of concrete as placed will not be acceptable. When temperature of concrete exceeds 90 deg F, obtain approval of proposed precautionary measures from Registered Design Professional. When temperature of steel reinforcement, embedments, or forms is greater than 120 deg F, fog steel reinforcement, embedments, and forms with water immediately before placing concrete. Remove standing water before placing concrete.

H. During cold weather concrete temperature and ambient temperature shall meet minimum temperature requirements as noted in Part 2 "Proportioning and Designing Concrete Mixes". Make provisions before concrete placement to maintain temperature of concrete. Use heating, covering, or other means adequate to maintain required temperature without overheating or drying of concrete due to concentration of heat.

I. Do not place concrete before removing forms from previous placements that would prohibit new concrete from being placed directly against adjacent hardened concrete or specified joint material.

J. Convey concrete from mixer to place of final deposit rapidly by methods that prevent segregation or loss of ingredients and ensures required quality of concrete. Do not use aluminum pipes or chutes. Use acceptable conveying equipment of size and design that prevents cold joints from occurring. Clean conveying equipment before each placement.

K. Deposit concrete continuously in one layer or in layers to have fresh concrete deposited on in-place concrete that is still plastic. Do not deposit fresh concrete on concrete that has hardened sufficiently to cause formation of seams or planes of weakness.

L. Deposit concrete as near as possible to its final location and towards concrete in place to avoid segregation. Do not use vibrators to transport concrete.

M. Concrete free fall shall not exceed 10 feet for concrete containing high-range water reducing admixture (superplasticizer) or 5 feet for other concrete. Provide elephant trunks or tremies or other placing equipment approved by Registered Design Professional, or provide openings in sides of forms to limit free dropping to above requirements.

N. Consolidate placed concrete with internal vibrating equipment supplemented with hand-spading, rodding, or tamping. Use vibrators that are as large and powerful as possible without affecting proper execution of Work. Thoroughly work concrete around reinforcement and embedded items and into corners of forms, eliminating air and stone pockets that may cause honeycombing, pitting, or planes of weakness. Do not use vibrators to move concrete within forms.

3.8 FINISHING FORMED SURFACES

A. After removal of forms provide formed surface one or more of finishes with following:
   1. Rough form finish: For surfaces that are concealed in finish work.
   2. Smooth form finish: For surfaces that are exposed in finish work. Examples are exposed foundations, equipment bases, and interior curbs.
   3. Smooth rubbed finish: For interior surfaces that are exposed in finish work. Produce finish within 24 hours of form removal.
   4. Grout Cleaned finish: For interior surfaces that are exposed in finish work.
   5. Light sand blast finish: For exterior surfaces that are exposed in finish work. Provide smooth form finish then lightly sand blast finish to provide uniform texture but not to expose aggregate.
   6. Tops of grade walls and retaining wall shall be troweled smooth.

B. Rough Form Finish: Patch tie holes and defects. Chip or rub off fins exceeding ½ inch in height. Remainder of surfaces shall be left with texture imparted by forms.

C. Smooth Form Finish: Patch tie holes and defects. Remove fins exceeding 1/8 inch in height.

D. Smooth Rubbed Finish: Remove forms and perform necessary patching. Produce finish on newly hardened concrete no later than day following formwork removal. Wet surface and rub it with carborundum brick or other abrasive until uniform color and texture are produced. Use no cement grout other than cement paste drawn from concrete itself by rubbing process.

E. Grout Cleaned Finish: Begin cleaning operations after surfaces to be cleaned are completed and accessible. Do not clean surfaces as work progresses. Wet surface and apply grout consisting of one part Portland cement and one and one-half parts fine sand with enough water to produce consistency of thick paint. Add white cement as needed to match color of surrounding concrete. Scrub grout into voids, and remove excess grout. When grout whitens, rub surface and keep surface damp for 36 hours afterward.

3.9 FINISHING UNFORMED SURFACES

A. Refer to Section 03315 Slabs-on-Grade for finishing surface requirements for slab on grade.

B. Finish concrete surfaces other than slabs on grade in accordance with one of the following finishing methods or:
   1. As designated in Contract Documents.
   2. Or as required by specified manufacturer's finishing material.

LOCATION	FINISHING METHOD
Foundations above finish floor	Trowel
Foundations below finish floor	Float
Elevated supported concrete floor for Mechanical and Electrical Rooms	Trowel
Stair Treads and landings	Non slip
Interior Truckwells and Railroad trackwells	Trowel
Pits and Trenches	Trowel
Exterior Ramps and sidewalks	Float /Broom near building entrance

C. Place concrete at rate that allows spreading, straightedging, and darbying or bullfloating before bleed water appears. Strike smooth top of walls, buttresses, horizontal offsets, and other similar unformed surfaces and float them to textures consistent with finish of adjacent formed surface.

D. Scratched finish - Place, consolidate, strike off, and level concrete, eliminating high spots and low spots. Roughen surface with stiff brushes or rakes before final set. Produce finish that meets conventional bullfloated tolerance requirements of ACI 117.

E. Floated finish - Place, consolidate, strike off, and level concrete, eliminating high spots and low spots. Do not work concrete further until it is ready for floating. Begin floating with hand floats, bladed power floats equipped with float shoes, or powered disk floats when bleed water sheen has disappeared and surface has stiffened sufficiently to permit operation. Produce finish that meets conventional straightedge tolerance requirements of ACI 117, and then refloat slab immediately to uniform texture.

F. Troweled finish - Float concrete surface, then power-trowel surface. Hand-trowel surface smooth and free of trowel marks. Continue hand-troweling until ringing sound is produced as floor is troweled. Tolerance for concrete floors shall be conventional straightedge tolerance in accordance with ACI 117, unless otherwise specified.

G. Broom or belt finish - Immediately after concrete has received floated finish, give concrete surface coarse transverse scored texture by drawing broom or burlap belt across surface.

H. Where nonslip finish is required, give surface broom or belt finish or dry-shake application of crushed aluminum oxide or other abrasive particles, as specified in Contract Documents. Rate of application shall be not less than 25 pounds per 100 square feet.

3.10 MISCELLANEOUS CONCRETE ITEMS

A. Concrete Fill
   1. Fill in holes and openings left in concrete structures, unless otherwise shown, after work of other trades is in place. Mix, place and cure concrete as specified to blend with in-place construction. Provide other miscellaneous concrete filling shown or required to complete Work.
   2. Concrete Fill for Column Washes - Fill in space inside column isolation joints after column is erected. Fill can be placed either before or after surrounding slab is placed.
   3. Concrete Fill for Steel Pan Stairs - Provide concrete fill for steel pan stairs tread, landings and associated items. Cast-in inserts and accessories as shown. Screed, tamp and trowel finish concrete surfaces.

B. Curbs - Provide monolithic finish to interior curbs by stripping forms while concrete is still green and by steel-troweling surfaces to hard, dense finish with corners, intersections and terminations slightly rounded or chamfered.

C. Equipment Bases and Foundations - Provide machine and equipment bases and foundations as shown. Set anchor rods for machines and equipment at elevations complying with diagrams or templates of manufacturer furnishing machines or equipment.

3.11 CURING AND PROTECTION

A. Refer to Section 03315 – Slabs-on-Grade for curing and protecting slab on grade.

B. Protect concrete from mechanical injury.
   1. Do not allow rain water to increase mixing water or damage surface finish. Provide protection from snow, sleet, hail, and freezing rain.
   2. Protect finished surfaces from damage by construction equipment, materials, or methods or by implementation of curing procedures.
   3. During curing period, protect concrete from damaging mechanical disturbances, particularly load stresses, heavy shock, and excessive vibration.

C. Begin curing immediately after placement, protect concrete from premature drying, excessively hot or cold temperatures, and mechanical injury. Protect concrete during curing period so that

concrete temperature does not fall below requirements as noted in ACI 301 Section 4. Maintain concrete with minimal moisture loss at nearly constant temperatures for periods necessary for hydration of cement and hardening of concrete.

D. Cold weather: When mean daily outdoor temperature is less than 40 degF, temperature of concrete shall be maintained between 50 and 70 degF for required curing period. When necessary, arrange for heating, covering, insulation, or housing concrete work before placement. Arrangements shall be adequate to maintain required temperature without injury as a result of concentration of heat. Combustion heaters shall not be used during first 24 hours unless precautions are taken to prevent exposure of he concrete to exhaust gasses which contain carbon dioxide.

E. Hot weather: When necessary to maintain evaporation control, make provision for windbreaks, shading, fog spraying, sprinkling, ponding, wet covering with light colored materials, or moisture evaporative retardants. Protective measures shall be installed as quickly as concrete hardening and finishing operations allow.

F. Curing concrete shall be continued for at least seven days:
   1. If tests are made of cylinders kept adjacent to structure and cured by same methods, moisture retention measures may be concluded when average test compressive strength has reached 70 percent of specified compressive strength f”c.
   2. Moisture retention measures may also be concluded when temperature of concrete is maintained at least at 50 degF for same length of time that laboratory-cured cylinders, representative of concrete-in-place, require to achieve 85 percent of compressive strength, f’c.
   3. If one curing procedure is used initially, it may be replaced by other procedures any time after concrete is 1 day old provided concrete is not permitted to become surface dry during transition.

G. After placing and finishing concrete use one or more of the following methods to preserve moisture in concrete:
   1. Ponding or continuous sprinkling.
   2. Application of absorptive mats of fabric kept continuously wet.
   3. Continuous application of mist spray.
   4. Application of waterproof sheet materials conforming to ASTM C 171.
   5. Application of acceptable specified curing compound conforming to ASTM C 309 and in accordance with manufacturer’s guidelines.

3.12 REPAIR OF SURFACE DEFECTS

A. General - Repair tie holes and surface defects immediately after formwork removal. Where concrete surface will be textured by sandblasting or bush hammering, repair surface defects before texturing.

B. Repair of tie holes - Plug tie holes except where stainless steel ties, non-corroding ties, or acceptably coated ties are used.
   1. When Portland cement patching mortar is face used for plugging, clean and dampen tie holes before applying mortar.
   2. When other materials are used, apply them in accordance with manufacturer's recommendations.

C. Repair of surface defects other than tie holes.
   1. Outline honeycombed or defective concrete with 1/2 to 3/4 in. deep saw cut and remove concrete down to sound concrete. When chipping is necessary, leave chipped edges perpendicular to surface or slightly undercut. Do not feather edges.
   2. Dampen area to be patched, plus another 6 in. around patch area perimeter.
   3. Thoroughly brush grout into surface. When bond coat begins to lose water sheen, apply patching mortar and thoroughly consolidate mortar into place.
   4. Strike off mortar, leaving patch slightly higher than surrounding surface to permit initial shrinkage.
   5. Leave patch undisturbed for 1 hr before finishing. Keep patch damp for 7 days.

D. Preparation of bonding grout - For bonding grout, mix roughly one part cement and one part fine sand with water to consistency of thick cream.

E. Site-mixed Portland cement repair mortar - Mix repair mortar using same materials as concrete to be patched with no coarse aggregate. Do not use more than one part cement to two and one-half parts sand by damp loose volume.

F. For repairs in exposed concrete, make trial batch and check color compatibility of repair material with surrounding concrete. When repair is too dark, substitute white Portland cement for part of gray cement to produce color closely matching surrounding concrete. Use repair mortar at stiff consistency with no more mixing water than is necessary for handling and placing. Mix repair mortar and manipulate mortar with trowel without adding water. Use mortar at stiff consistency.

G. Remove stains, rust, efflorescence, and surface standard face deposits considered objectionable by Owner’s Representative.

3.13 REPAIR RESTORATION

A. Repair Method For Defective Work: Make structural repairs only after prior approval by Registered Design Professional. Submit repair material specification, manufacturer’s data and preparation and application procedure.

3.14 FIELD QUALITY CONTROL

A. Responsibilities of Owner’s Testing Agency related to on site Work includes, but is not limited to:
   1. Obtain samples of freshly mixed concrete for tests in accordance with ASTM C 172.

2. Obtain at least one composite sample for each 100 cubic yards, or fraction thereof, of each concrete mixture placed in any one day.
3. Conduct strength tests of concrete during construction in accordance with the following procedures:
    a. Mold and cure four cylinders from each sample in accordance with ASTM C 31. Record any deviations from ASTM requirements in test report.
    b. Test cylinders in accordance with ASTM C 39. Test one specimen at 7 days for information, and two specimens at 28 days for acceptance, unless otherwise specified. Hold remaining cylinder for later testing.
4. Determining slump in accordance with ASTM C143, once for each set of strength test specimens and whenever concrete consistency appears to vary.
5. Determining unit weight of lightweight concrete in accordance with ASTM C567, once for each set of strength test specimens.
6. Determining air content of concrete in accordance with ASTM C173or ASTM C231, once for each set of strength test specimens.
7. Checking temperature of fresh concrete in accordance with ASTM C1064, once for each set of strength test specimens and hourly when ambient air temperature is not within range of 40 to 80 degrees F.

B. Field-cured test cylinders, requested and paid for by Contractor, shall be molded at same time and from same samples as laboratory-cured test cylinders.

C. Strength tests, requested by Contractor in order to obtain approval of early form removal or accelerated curing methods, shall be at Contractor's expense.

D. When strength of field-cured cylinders is less than 85 percent of companion laboratory-cured cylinders, evaluate current operations and provide corrective procedures for protecting and curing in-place concrete, unless field-cured strength exceeds specified compressive strength by more than 500 pounds per square inch.

SUBMITTAL FORM
CONCRETE MIX DESIGN

Project INFORMATION

Project:	
Location:	
General Contractor	
Concrete Contractor:	
Concrete Strength (Class)	
Use (Describe):	

Type, Number, or Name of Concrete Mix	

Method of Selecting Mix Proportions

	Please Check One	Sct.
Based on Field Test Data		A.
Based on Trial Mix Data		B.

Section A. Field Test Data

See ACI 301 Paragraph 4.2.3.2

Number of Test Cylinder Results Included	
Average Compressive Strength of Test Results	psi
Standard Deviation of Compressive Strength	psi
Inclusive Dates of Field Tests	From To

Section B. Trial Mix Test Data

Age (Days)	Mix #1	Mix #2	Mix #3
7	psi	psi	psi
7	psi	psi	psi
28	psi	psi	psi
28	psi	psi	psi
28 Day Average	psi	psi	psi
Trial Mix Batching Date			

Summary of Selected Mix Characteristics

Name of Mix	
Strength	psi (28day)
Density	pcf
Air Content (Percent)	percent

Details of Selected Mix.

Materials	Source/Type	Specific Gravity	Weight/Pound	Absolute Volume, cu.ft.
Cement				
Fly Ash				
Microsilica				
Coarse Aggregate				
Fine Aggregate				
Water				
Other				
		Total		27.0 Cu. Ft.

E. **Water/Cement Ratio (Pounds of water/ Pounds of Cement) =** _____

Slump _____inches.

Required Backup Information	Please Check
Coarse Aggregate Gradation Report	
Fine Aggregate Gradation Report	
Admixture Compatibility Certification Letter.	

Proposed Admixtures	Manufacturer	Dosage oz./cwt.
Water Reducer (Type?)		
Air Entraining Agent		
Accelerator (Non Chloride)		
Other		

Slump with Water Reducer _____inches.

Submitted by:

Name:	
Address:	
Phone Number:	
Fax Number	
Main Plant Location:	
Miles from Project Site	
Secondary Plant Location	
Miles from Project Site	
Date	

END OF SECTION

Revision History	
Date	**Rev. No.**
A	0
B	0
C	0
D	0
E	0
F	0
02-19-09	0

SM/djo [ST,AR,EL,CV]
P:__PROJECTS_SF07\SF070003.0001NSLS II CCWF EXPANSION\SPC\03300.DOC

SECTION 03315

SLABS-ON-GRADE

PART 1 GENERAL

1.1 SUMMARY

A. Section Includes
1. Concrete Slabs-on-Grade as shown on Drawings and as specified.
   a. See Section 03300 for supported floor slabs.
2. Fibers.
3. Vapor Barrier.
4. Joints and Joint Materials.
5. Surface Treatments.
6. Curing and Protecting Concrete Slabs-on-Grade.

B. Products Installed But Not Supplied Under This Section
1. Reinforcement.
2. Anchor rods built into Slabs-on-Grade.
3. Miscellaneous items built into concrete Slabs-on-Grade.
   a. Bearing plates.
   b. Edge angles.
   c. Cover Frames.

C. Related Sections
1. Earthwork - Section 02200.
2. Cast-in-Place Concrete - Section 03300.

1.2 REFERENCES

A. ACI Standards
1. ACI 117 Specification for Tolerances for Concrete Construction and Materials.
2. ACI 212 Chemical Admixtures for Concrete.
3. ACI 301 Standard Specifications for Structural Concrete.
4. ACI 302 Guide for Concrete Floor and Slab Construction.
5. ACI 318 Building Code Requirements for Reinforced Concrete.
6. ACI 360 Design of Slabs on Grade.

B. ASTM Standards
1. Reference Standards and cited publications including ACI standards, ASTM standards, AWS standards, other referenced standards, and cited publications referenced in Section 03300 and ACI 301 shall be mandatory unless modified by Section 03300 or this Specification.
2. A185: Specification for Steel Welded Wire, Fabric, Plain, for Concrete Reinforcement.
3. A36: Specification for Structural Steel.

4. A615: Specification for Deformed and Plain Billet steel Bars for Concrete Reinforcement.
5. A616: Specification for rail-steel Deformed and Plain Bars for Concrete Reinforcement.
6. A820: Specification for Steel Fibers for Fiber Reinforced Concrete.
7. C31: Test Methods of Making and Curing concrete Test specimens in the Field.
8. C1017: Specification for Chemical Admixtures for Use in Producing Flowing Concrete.
9. C1077: Practice for Laboratories Testing Concrete and Concrete Aggregates for Use in Construction and Criteria for Laboratory Evaluation.
10. C1116: Specification for Fiber Reinforced Concrete and Shotcrete.
11. C150: Specification for Portland Cement.
12. C171: Specification for Sheet Materials for Curing Concrete.
13. C309: Specification for Liquid Membrane-Forming Compounds for Curing Concrete.
14. C31: Test Methods for Making and Curing Concrete Test Specimens in the Field.
15. C494: Specification for Chemical Admixtures for Concrete.
16. C78: Specification for Flexural Strength of Concrete (Using simple Beam with Third-Point Loading)
17. C979: Specification for Pigments for Integrally Colored Concrete
18. C1018: Standard Test Method for Flexural Toughness and First Crack Strength of Fiber-Reinforced Concrete (Using Beam and Third-Point Loading)
19. E1155: Test Method for Determining Floor Flatness and Levelness Using the F-number System.
20. E329: Practice for Use in the Evaluation of Testing and Inspection Agencies as Used in Construction.

C. AASHTO Standards
1. AASHTO T318 Measurement of Water Content of Fresh Concrete Using the Microwave Oven

D. Cited Publications
1. ACI CPI: Technician Workbook for ACI Certification of Concrete Field Testing Technician - Grade 1.
2. ACI-SP-15: Field Reference Manual
3. CRSI MSP-1: Manual of Standard Practice.

E. Field References
1. Keep copies of the following references in Contractor's field office.
   a. ACI Field Reference Manual SP-15
   b. Guide for Concrete Floor and Slab Construction (ACI 302) with Selected ACI and ASTM References.

1.3 SYSTEM DESCRIPTION

A. Performance Requirements - Acceptance Standards
1. Concrete Strength Evaluation Acceptance
   a. Test Results Evaluation. Concrete test results shall be reviewed on daily basis by Owner's Representative to verify compliance with Contract Documents. If conducted

tests are inadequate for evaluation, provide and pay for additional tests in agreement with General Conditions for work where questionable concrete has been placed.

2. Concrete Dimensional Tolerances
   a. Inaccurately formed concrete surfaces that exceed ACI 117 tolerances may be rejected.
   b. Finished slabs exceeding specified Tolerances for Slabs may be corrected provided strength or appearances are not adversely affected.
3. Concrete Appearance.
   a. Concrete exposed to view with defects that adversely affect specified finish appearance will be rejected.
4. Concrete Slab-on-Grade Acceptance
   a. Completed concrete work shall conform to requirements of this Project Manual and Contract Documents.
   b. Concrete work that fails to meet Contract Document requirements, but subsequently is repaired to bring concrete into compliance may be accepted.
      1) To bring non-conforming work into compliance, use repair methods that maintain specified strength and meet applicable requirements for function, durability, dimensional tolerances, and appearance.
   c. Concrete work that fails to meet Contract Document requirements and cannot be brought into compliance will be rejected.
      1) Rejected work shall be removed and replaced with new work.

1.4 SUBMITTALS

A. General
   1. Furnish submittals for items that are identified in this Section by different typefaces and bracketed code (i.e., *Item [L]*). Refer to section 01340 for definition of codes, types of submittals and administrative requirements governing submittal procedure.
   2. Additional submittal requirements connected with this Section are specified under this Article.

B. Product Data
   1. *Design mix verification [D]*: Design mix shall conform to the following:
      a. Submit 7 and 28-day compression test results of proposed design mix per ACI 301 requirements for trial mixtures.
      b. Submit 7 and 28-day flexural beam test results of proposed design mix both with (ASTM C1018) and without (ASTM C78) fibers per ACI 301 requirements for trial mixtures.
      c. Concrete modulus of rupture shall meet or exceed design requirements.

C. Shop Drawings
   1. *Reinforcing Steel Placing Drawings [D]:* Submit placing drawings showing sizes, fabricated dimensions, and location for placing reinforcing bars and reinforcement support for review and acceptance before fabrication.

2. *Slab on Grade Jointing [D]:* Submit drawing with joint pattern and placing sequence for slabs on grade and toppings to Architect-Engineer Registered Design Professional.
   a. Placement shapes and sequence shall be defined by Contractor but shall consider potential shrinkage of each placement and its restraint effect on other placements.
   b. Joint pattern shall be laid out so that columns do not inhibit concrete floor panels from anticipated shrinkage. Place first adjacent joint parallel to pit walls, maximum distance of one-half typical joint spacing to account for locked effect of slab panel at wall.
   c. Include details of dowels, dowel-holding devices, and shear transfer devices and all other applicable hardware proposed for use.

D. Quality Assurance/Control Submittals
   1. Minutes of Slab On Grade Meeting and Follow-Up Project Meetings
      1) *Pre Construction Project Meeting Minutes [R]:* Provide meeting minutes to participating parties. Include attendees and decisions.
         a) Include statements by admixture manufacturers and Finishing Contractor that proposed mix design and placing procedures are agreed upon and shall produce concrete floors in compliance with Contract Document that can be properly placed and finished to meet specified strength and flatness requirements.
   2. Test Reports
      a. Concrete Strength Tests: Results of cylinder tests and beam tests shall be submitted toArchitect-Engineer Registered Design Professional.
      b. Fibers: Certification and test reports furnished by the fiber manufacturer shall be submitted toArchitect-Engineer Registered Design Professional for each shipment of fibers.
      c. F-Number Testing: Results from F-number testing shall be sent to the Registered Design Professional.
      d. Mix Design Changes: Changes to mix design shall be submitted toArchitect-Engineer Registered Design Professional for approval.
   3. Field Reports
      a. Pouring Schedules, Casting Plan, And Records
         1) *Schedules and Records [R]*: Prepare detailed, written event schedules and casting plans, and submit to Owners Representative before starting work.
         2) Keep written records of concrete placements including location, date, cubic yards of concrete, ambient air temperature, and unusual occurrences during placement. Keep signed trip tickets for each truck that discharges concrete on site. Permit records inspection by Owners Representative at any time.
   4. Repair Methods
      a. *Repair Method For Defective Work [D]:* Make structural repairs only after Architect-EngineerRegistered Design Professional approval concerning materials, methods and procedures.
   5. Close Out Submittals
      a. At Project completion, submit Pouring Schedule summary, Casting Plan, and Records to Owners Representative.

1.5 QUALITY ASSURANCE

A. Qualifications
   1. Submit proposed testing agency qualification data for acceptance.
      a. Testing Agencies that do testing services on concrete materials shall meet ASTM C1077 requirements. Testing Agencies that testing services on reinforcing steel shall meet ASTM E329 requirements. Testing Agencies doing testing shall be acceptable to Registered Design Professional before doing any work. Concrete Field Tests required by Contractor or Owner shall be made by ACI Concrete Field Testing Technician Grade 1 per ACI CPI or equivalent. Equivalent certification programs shall include requirements for written and performance examinations as stipulated in ACI publication CP1.
   2. Floor Slab Contractor Qualification
      a. For floor slab work, use Contractors specializing in this Work. Use skilled workers experienced in this Work, and furnish labor, materials, equipment and services to properly complete this work.
      b. *Qualifications [Q]:* Submit qualifications to Owners Representative indicative that Contractor is capable of this type of Work. Include five recent projects, summary of type of slab placement, method of construction and finishing, and F-number values obtained for each project.

B. Pre-Installation Meetings
   1. Project Meeting for Slab on Grade Work.
      a. At least 35 days prior to the start of the concrete construction schedule, the Contractor shall conduct a meeting to review the proposed mix designs and to discuss the required methods and procedures necessary to achieve the required concrete quality and other specific project requirements
      b. Contractor's Superintendent shall chair the meeting and distribute agenda 21 days prior to the scheduled date of the meeting.
      c. Invite representatives concerned with concrete slab-on-grade work to meeting. Attendees shall include, but not be limited to, the following:
         1) Contractor's Superintendent.
         2) Concrete subcontractor.
         3) Testing agency responsible for concrete design mix.
         4) Testing agency responsible for field quality control.
         5) Concrete producer.
         6) Admixture manufacturers.
         7) Reinforcing foreman.
         8) Fiber Product Representative.
         9) Concrete finishing foreman.
         10) Architect-Engineer Registered Design Professional.
         11) Owner's Representative.
      d. Proposed mix designs, slab-on-grade details, and placement, finishing, and curing procedures shall be distributed one week before meeting.

e. Provide meeting minutes to attendees and Owner. Include statements by Contractor that proposed mix design and placing procedures shall produce concrete in compliance with Contract Documents.
f. Proposed product representatives and equipment representatives are to provide field service to assist in obtaining specified results under prevailing project site conditions.

2. Follow Up Project Meeting For Test Slab On Grade.
   a. At least three days before beginning floor slab-on grade-work, Contractor shall hold follow-up meetings to review test slab placement results. Proposed modifications to materials or procedures to improve final product slabs shall be completed at this time.
   b. Contractor's Superintendent shall organize meeting, notify attendees, establish and distribute agenda in advance and chair meetings. Attendance shall be at Contractor's discretion, but shall include Owner's Representative. Registered Design Professional shall be notified of meeting.

1.6 DELIVERY, STORAGE, AND HANDLING

A. Reinforcement
   1. Prevent bending, coating with earth, oil, or other material, or otherwise damaging reinforcement.
   2. For handling coated reinforcement, use equipment having contact areas padded to avoid damaging coatings. Lift coated reinforcement bundles at multiple pick-up points to prevent bar to bar abrasion from sags in bundles. Do not drop or drag coated reinforcement. Store coated reinforcement on cribbing that prevents damage to coatings.
   3. Structural fibers - Deliver factory prepared and ready to use in containers showing weight. Store in dry locations.
   4. Store Welded Wire Fabric Reinforcing Mats to avoid contact with soils, or surface moisture.

B. Surface Treatment Materials
   1. Deliver factory prepared, aggregate shake, ready-to-use, proportioned, mixed, and delivered to project site in waterproof bags. Identify each bag with manufacturer and product labels

PART 2 PRODUCTS

2.1 MATERIALS

A. Concrete
   1. Cementitous material
      a. Refer to Section 03300, Cast-in-Place Concrete, for cementitious material requirements.

B. Aggregates
   1. For aggregates in normal weight concrete, refer to Section 03300, Cast-in-Place Concrete for requirements.
   2. Maximum size Coarse Aggregate shall be nominal 1.5-inch per ASTM C467.

3. Combined aggregate gradation for slabs shall be 8% -18% for large top size aggregates (1 ½ inch) or 8%-22% for smaller top size aggregates (1 inch or ¾ inch) retained on each sieve below the top size and above the No. 100 sieve.

C. Vapor Barrier
   1. Provide vapor barrier that conforms to ASTM E1745, Class A or B. The membrane shall have a water-vapor transmission rate of no greater than 0.006 perms when tested in accordance with ASTM E96. The vapor barrier shall be placed over prepared base material where indicated below slabs o grade. Vapor barrier shall be no less than 10 mils thick in accordance with ACI 302.1R.
      a. Roof Industries "Griffolyn Vaporguard"
      b. Stego Industries, LLC "Stego Wrap (15 mil)"
      c. W.R. Meadows "Premoulded Membrane with Plasmatic Core"

D. Supplementary Cementitious Materials
   1. Fly Ash: ASTM C618, Type F may be used up to a maximum of 25% of the total cementitious content.
   2. Ground Granulated Blast Furnace Slag: ASTM C989, Grade 100 or 120 may be used up to a maximum of 40% of the total cementitious content.
   3. The exact percentages used shall be based on a successful test placement procedure.

E. Admixtures
   1. General
      a. Refer to Section 03300, Cast-in-Place Concrete, for Water Reducing, Water Reducing/Retarding, Accelerating, Mid Range, and High Range Admixture products.

F. Reinforcement
   1. Reinforcement shall be deformed bars conforming to ASTM A615, A616 or A617.
   2. Wire welded wire fabric shall be furnished in flat mats or sheets, not in rolls, per ASTM A185.

G. Joint Shear Transfer Devices
   1. Joint Shear Transfer Devices shall be diamond steel dowels conforming to ASTM A36 of size and lengths as shown on Drawings.
   2. Joint Shear Transfer Devices shall be square steel dowels conforming to ASTM A36 of size and lengths as shown on Drawings.
   3. Dowels shall have compressible material or otherwise designed to accommodate shrinkage differential between adjacent placements. Alternative devices to accommodate shrinkage movement may be proposed and used subject to Registered Design Professional approval. Support dowels at slab mid-depth in dowel baskets or receptacle to ensure accurate position and alignment.

H. Floor Joint Fillers
   1. Epoxy Semi Rigid Joint Filler meeting minimum Shore D hardness of 50.
      a. Subject to compliance with requirements, joint filler products incorporated in Work are limited to the following:
         1) Chemrex “Masterfill 300 I”
         2) Euclid Chemical Company “Euco 700 or Euco 800”
         3) Metzger McGuire Company “MM-80 Gray”
   2. Premolded Joint Fillers:
      a. Subject to compliance with requirements, joint filler products incorporated in Work are limited to the following:
         1) Sonneborn “Sonoflex F”
         2) W. R. Meadows, Inc. “Ceramar”
   3. Polyurethane Joint Sealant ASTM C920, Type S, Grade P, Class 25:
      a. Subject to compliance with requirements, joint filler products incorporated in Work are limited to the following:
         1) Euclid Chemical Company “Eucolastic I”
         2) Sika Chemical Corp. “Sikaflex ICSL”
         3) Tremco Inc. “Vulkem 45”

I. Curing Compounds.
   1. Curing products shall conform to ASTM C309 or ASTM C1315.
   2. Curing products shall comply with limitations to atmospheric discharges of volatile organic compounds (VOC).
   3. Subject to compliance with requirements, curing and protection products incorporated in Work are limited to the following:
      a. Clear Curing and Sealing Compound (VOC Compliant, 350 g/l): Liquid type membrane-forming curing compound, clear styrene acrylate type, complying with ASTM C1315, Type I, Class A, 25% solids content minimum. Moisture loss shall be not more than 0.40 kg/m^2. Subject to project requirements provide one of the following products:
         1) Chemrex “MasterKure 200W”
         2) Euclid Chemical Company “Super Diamond Clear VOX or Super Rez Seal VOX”
         3) Sonneborn “Kure-N-Seal WB30”
      b. Dissipating or Strippable Curing Compound comforming to ASTM C309. Subject to project requirements provide one of the following products:
         1) Dayton Superior “Day-Chem Rez Cure (J11W)”
         2) Euclid Chemical Company “Kurez DR VOX or Kurez W VOX”
         3) L & M Construction Chemical, Inc. “L & M Cure R”

J. Liquid Sealer/Densifier Compound:
   1. High performance, deeply penentrating concrete densifier; odorless, colorless, VOC-compliant, non-yellowing siliconate based solution designed to harden, dustproof and protect concrete floors. The compound must contain a minimum solids content of 20% of which 50% is siliconate.
      a. Euclid Chemical Company “Euco Diamond Hard”

b. L&M Construction Company “Sealhard”

K. Moisture Evaporation Retardants
1. Subject to compliance with requirements, Moisture Evaporation Retardant products incorporated in Work are limited to the following:
a. Euclid Chemical Company “Eucobar”
b. L & M Construction Chemical, Inc. “E-Con”
c. Master Builders, Inc. “ConFilm”
d. Sika Corporation “SikaFilm”

2.2 MIXES - PROPORTIONING CONCRETE

A. Refer to Section 03300 Cast-in-Place Concrete for Proportioning requirements and Concrete Production

PART 3 EXECUTION

3.1 PREPARATION

A. Under Slab Preparation.
1. Before placing base course, proof roll subgrade to assure that subgrade is acceptable for placement of base course and slab-on-grade. Proof rolling of subgrade shall be observed and evaluated by Testing Agency. If rutting or pumping occurs during proof rolling, soil subgrade shall be corrected and soft spot repair proof rolled again.
2. Place vapor barrier at the bottom of the base course or below the slab as shown on the drawings. Lap the joints of vapor barrier sheets a minimum of 6 inches, and 9 inches onto adjacent vertical surfaces, and seal vapor-tight. Seal vapor barrier around penetrations, and at damaged areas to maintain vapor-tight seal. Do not puncture vapor barrier during construction operations.
3. Except as indicated, provide minimum 6 inch aggregate base under concrete slabs on grade.
a. Inside temperature shall be maintained above 50 degF long enough to remove frost from subgrade before placing base course placing operations.
b. Use compaction equipment suited to achieve specified compaction for the base course installed. Use particular care to prevent “bulking” of fine granular fill
c. Terminate base course in true planes at correct elevations.
4. Soil support system (subgrade and base course) should be frost free before concrete placing begins.
5. Base course should be moist when placing concrete, but there shall be no freestanding water, nor soft, nor muddy spots on soil support system.

B. Formwork.
1. General
a. Provide to accommodate openings, offsets, haunches, grooves, depressions, curbs and other special shape requirements, in formwork. Besides normal detailing, identify embedded items placed or supported in formwork.

2. Installation - Slab on Grade Edge Forms and Screeds.
    a. Edge forms and intermediate screed strips shall be set accurately to produce designated finished surface elevations and contours. Forms and screeds shall be sufficiently strong to support vibrating screeds or roller pipe screeds if specified finish requires equipment use. Concrete surface shall be aligned to screed strips contours by using strike off templates or acceptable compacting type screeds.

C. Placing Reinforcement Preparation:
1. To support reinforcement, use 4-inch square concrete block of compressive strength to match placed concrete.
2. Clay, wood, pervious material, or chairs without sand plates shall not be used to support steel reinforcing in slabs.
    a. Chair supports for reinforcing bars or welded wire installed over ground, shall bear on sand plates.
3. Place additional reinforcing bars at re-entrant corners of pits and openings, and in adjacent panels opposite dead-ended control or construction joints.
4. Refer to Section ACI 301 Standard Specification for Structural Concrete, Section 3.3.

D. Embedded Items
1. Set miscellaneous metal items furnished under other Sections or Contracts, to be embedded in slab-on-grade work. Set sleeves and floor openings to designated and required lines, (elevations) and locations within plus or minus 1/4 inch per ACI 301, TABLE 4.3.1. Set other items to designated and required lines, (elevations) and locations, within plus or minus 1/16 inch.

3.2 PRODUCTION OF CONCRETE.

A. See Section 03300 concerning Concrete.

3.3 CONSTRUCTION OF SLABS

A. Placing Concrete - General
1. Furnish, construct, and install Work per ACI 302 and related referenced ACI and ASTM Standards.
2. Notify Owners Representative at least 48 hours in advance of specific, designated placing operations to permit inspection. Placing concrete without Owner Representative notification may be cause for rejection of concrete work placed without notification.
3. Concrete mixing and placing shall be carefully coordinated with finishing.
4. Concrete shall not be placed on grade or in forms more rapidly than it can be spread straight-edged, and darbied or bull floated. Do these operations before bleed water collects on surface.
5. Confirm embedments, reinforcing steel elevations, and bottom slab elevations before placing concrete.
6. Cast concrete slabs on grade in alternate lane pattern with minimum 72-hour interval between casting adjacent lanes.
7. Fill temporary openings with concrete or non-shrink grout after items has been installed.

B. Refer to Section 03300 Cast-in-Place Concrete for other requirements for Placing, Depositing, and Coordinating Concrete Materials use.

C. Provide concrete column encasement as shown on Drawings.

D. Provide concrete washes in steel column webs as shown on Drawings.

E. Construction and Control Joints and Shear Transfer Devices.
   1. Provide construction and control joint devices per approved joint pattern shop drawings. Joint pattern shall conform to typical joint pattern indicated on Drawings, but shall accommodate specific slab-on-grade situations.
      a. Joint pattern shall be square or nearly square, parallel to walls, and account for discontinuities in slab due to pits, trenches, and equipment foundations. Joint spacing shall not exceed 2 to 1 length to width aspect ratio for any given panel unless otherwise noted.
   2. Provide shear transfer devices (dowels) at construction joints and as shown on Drawings.
      a. Use manufactured dowel holders to accurately place and maintain dowels through concrete placement and finishing operations.
   3. Use premolded joint fillers thickness as shown on Drawings along building perimeter, to isolate equipment foundations or pads, at column isolation joints, and other slab isolation. Recess top of joint filler 1/4 inch for sealant.
      a. Recess top of joint filler 1/4-inch for sealant.

F. Protection
   1. *Loading and concrete support:* Do not allow construction loads to exceed superimposed load which structural members, with necessary supplemental support, are capable of carrying safely and without damage.
   2. *Cold weather:* When mean daily outdoor temperature is less than 40 degF, temperature of concrete shall be maintained between 50 and 70 degF for required curing period. When necessary, arrange for heating, covering, insulation, or housing concrete work before placement. Arrangements shall be adequate to maintain required temperature without injury due to concentration of heat. Combustion heaters shall not be used during first 24 hours unless precautions are taken to prevent exposure of the concrete to exhaust gasses, which contain carbon dioxide.
   3. *Hot weather:* When necessary to maintain evaporation control, make provision for windbreaks, shading, fog spraying, sprinkling, ponding, wet covering with light colored materials, or moisture evaporative retardants. Protective measures shall be installed as quickly as concrete hardening and finishing operations allow.
   4. *Rate of temperature change:* Changes in temperature of air immediately adjacent to concrete during and immediately following curing period shall be kept as uniform as possible and shall not exceed 5 degF in any 1 hour or 50 degF in any 24-hour period.
   5. Protect concrete surfaces from damage against:
      a. Deicer materials.
      b. Freezing and other adverse weather conditions.
      c. Hard Wheeled Traffic
      d. Heavy construction traffic.

e. Impact and abrasion
f. Rain or running water,
g. Rubber Tire Marks
h. Stains (grease, oil, chemicals, paints, clay, soil)

3.4 SURFACE FINISHES

A. Scratched Finish
1. Place, consolidate, strike off, and level concrete, eliminating high spots and low spots, to specified tolerance. Roughen surface with stiff brushes or rakes before final set.

B. Floated Finish
1. Place, consolidate, strike off, and level concrete, eliminating high spots and low spots. Do not work concrete further until ready for floating. Begin floating with hand floats, or bladed power float equipped with float shoes, or with powered disc floats when water sheen disappears and when surfaces have stiffened sufficiently to permit finishing operations. During or after first floating, surface planeness shall be checked with 10-foot straightedge applied at not less than two different angles. High spots shall be cut down. Low spots shall be filled. These procedures shall produce surfaces within specified tolerances. Slabs shall be refloated immediately to produce uniform sandy textures and an FF20/FL17 tolerance.

C. Broom or Belt Finish.
1. Immediately after concrete has received float finish as specified above, it shall be given coarse transverse scored texture by drawing brooms or burlap belts across surfaces.
a. Texture shall be as approved by Registered Design Professional from sample panels.

D. Troweled finish
1. Float surfaces as specified above and then power-trowel. Finally, hand-trowel all surfaces. After power floating, first troweling shall produce smooth surfaces, which are relatively defect free but which may still show some trowel marks. Additional troweling shall be done by hand after surface has hardened sufficiently. Final troweling shall be done when ringing sounds are produced as trowel is moved over slab surfaces. Surface shall be thoroughly consolidated by hand troweling operations. Finished surfaces shall be essentially free of trowel marks, uniform in texture and appearance and shall be plane to specified tolerances. On surfaces intended to support floor coverings, any defects of sufficient magnitude to show through floor coverings shall be removed by grinding.

3.5 CURING

A. General
1. Beginning immediately after placement, protect concrete from premature drying, excessively hot or cold temperatures, and mechanical injury. Maintain concrete with minimal moisture loss at nearly constant temperatures for periods necessary for hydration of cement and hardening of concrete.

2. Curing shall be continued for at least 7 days.
    a. Alternatively, if tests are made of cylinders kept adjacent to slab and cured by same methods, moisture retention measures may be concluded when average test compressive strength has reached 70 percent of specified compressive strength.
    b. Moisture retention measures may also be concluded when temperature of concrete is maintained at least at 50 degF for same length of time that laboratory-cured cylinders, representative of concrete-in-place, require achieving 85 percent of compressive strength.
    c. If one curing procedure is used initially, it may be replaced by other procedures any time after concrete is 1 day old provided concrete is not permitted to become surface dry during transition.

B. Curing Methods
1. Cure slab-on-grade surfaces with water. Apply one of the following procedures immediately after completion of placement and finishing. Do not water cure colored concrete or colored surface treatment.
    a. Slabs on grade shall be kept continuously wet using covering material of burlap or manufactured absorptive fabric mats conforming to ASTM C171. Keep covering material wet so that moisture film remains continuously in contact with concrete during curing period.
    b. Slabs-on-grade shall be continuously wetted and covered with moisture retaining coverings of waterproof sheet materials, conforming to ASTM C171.
        1) Polyethylene (Plastic) Film or waterproof paper.
            a) Spread sheets as finishing operations are completed.
            b) Do not use where slab surface appearance is critical.
            c) Repair tears to maintain moisture retention.
2. Cure exposed slab-on-grade floor surfaces using specified curing and sealing compounds meeting ASTM C309 or ASTM C1315. Apply curing compound immediately after final finishing operations and after water sheen has disappeared from concrete surface. Apply curing compound in accordance with Manufacturer's instructions but at an application rate not greater than one gallon per 300 square feet.
    a. Use high-solids (25% solids) curing compound for the following:
        1) Exposed, interior slab-on-grades not scheduled to receive another floor finish or liquid sealer/densifier.
        2) Slab-on-grades with monolithic, dry shakes if liquid sealer/densifier is not going to be applied later.
        3) Slab on grades to receive resilient tile.
        4) Slab on grades to receive carpet.
    b. Use high-solids (25% solids) curing compound for the following:
        1) Exposed, interior slabs-on-grade subjected to vehicular traffic and to be cured and sealed.
    c. Use dissipating or strippable film curing compound that wears off with normal traffic or can be easily stripped by use of the Manufacturer's stripping and cleaning process for the following:
        1) Slabs receiving adhesive applied finishes.
        2) Slabs receiving liquid sealer/densifier treatment.

d. Use compatible curing compounds per Manufacturer's recommendations and instructions for the following:
   1) Slab on grades to receive epoxy coating.
   2) Slab on grades to receive urethane coatings.
   3) Slab on grades with spark disseminating dry shake. Cure sparkproof finished floors with manufacturer's special conductive curing compound, applied in number of coats and rates per manufacturer's recommendations.
   4) Slab on grades with color dry shake.

3. Curing compound shall not be used on any surface against which additional concrete or other material is bonded unless said curing compound is proven to prevent bonding, or unless positive measures are taken to remove said curing compound completely from areas to receive bonded application. Cure deferred floor finish slabs per Deferred Floor Finish Contractors' recommendations.
4. Cure slab edges that are temporarily exposed after form removal and before placing adjacent slabs.

3.6 LIQUID SEALER/DENSIFIER

A. Liquid Hardeners
   1. Apply this compound on exposed interior floors. Application shall be made in strict accordance with Manufacturer's instructions and just prior to completion of construction. Spray, squeegee or roll on liquid densifier to a clean and dry concrete surface. Scrub liquid into surface with a mechanical scrubber. Keep surface wet with densifier during the application process. When product thickens, but not more than 60 minutes after initial application, squeegee or vacuum surface to remove excess material.

3.7 SAWCUTTING JOINTS.

A. Where saw-cut control or contraction joints are required, or permitted in structural fiber reinforced concrete, cutting shall be timed with concrete set but no later than 4 hours after the slab has been finished. Cutting shall be started when concrete has hardened sufficiently to prevent dislodging aggregates by saw.
   1. Sawcut control or contraction joints one-quarter depth of slab using wet-blade machines.
   2. Sawcut control or contraction joints initially to 1-inch minimum depth using an early entry saw.

B. Where saw-cut control or contraction joints are required, or permitted in steel fiber reinforced slabs, cutting shall be timed with concrete set but no later than 12 hours after placement. Cutting shall be started when concrete has hardened sufficiently to prevent dislodging aggregates by saw.
   1. Extend sawcuts located over dowels to top of dowels to ensure cracking at these locations.
   2. Sawcuts in areas without dowels shall be one-third slab thickness minimum.
   3. Do not skew sawcuts from column grid to eliminate re-entrant corners.

C. Trace construction joints for slab-on-grade receiving epoxy joint filler with wet blade machine to 2-inch depth.

D. Provide control joints in deferred finish by saw cuts as shown with cutting done not later than 24 hours after finish is placed.

3.8 JOINT FILLING

A. Fill construction and control joints with epoxy joint filler unless otherwise noted. Delay filling sawcut joints 90 days minimum after cutting. Fill full joint depth with cold-applied, epoxy compound with minimum Shore D Hardness of 50. Inspect joints 120 days after filling and refill joints where filler has separated from joint face. Fill deferred finish joints with specified epoxy joint filler.

B. For Joints in Areas not Subjected to Small Hard Wheeled Traffic:
   1. Use polyurethane compound joint sealant over premolded joint fillers. Fill void formed at top of premolded joint filler in exposed locations. Clean recessed sides before filling to ensure complete and continuous bond to both recesses' sides. Use sealant and primer as recommended by sealant manufacturer.

3.9 REPAIR RESTORATION

A. Slab Deficiencies
   1. Criteria for determining potential strength deficiency. Strength will be considered deficient and concrete work will be rejected when work fails to comply with requirements which control structure's strength including, but not limited to the following conditions:
      a. Concrete strength failing to comply with required compressive or flexural strength.
      b. Reinforcing steel size, quantity, strength, position, or arrangement at variance with Contract document's requirements.
      c. Concrete elements that differ from required dimensions, levelness, flatness, or location.
      d. Curing not per Contract Documents.
      e. Inadequate protection from extreme temperature and other environmental conditions during early hardening and strength development stages.
      f. Mechanical injury, construction fires, accidents, or premature formwork removal resulting in deficient strength.

B. Strength Deficient Repair Actions
   1. Action required when strength is potentially deficient: When structural strength is considered potentially deficient, the following actions may be required by the followingArchitect-Engineer:
      a. Replace the deficient concrete slab.
      b. Structural analysis or additional testing, or both.
      c. Core testing.
      d. If testing is inconclusive or impracticable or if structural analysis does not confirm structural safety, load tests may be required and their results evaluated per ACI 318.
      e. Concrete work rejected by structural analysis or by load test results shall be strengthened with additional construction when required by Architect-EngineerRegistered Design Professional, or replaced.

f. Document repair works proposed to bring strength deficient concrete work into compliance with Contract Documents, and submit documentation to Architect-EngineerRegistered Design Professional for acceptance.
g. Extend slab-on-grade warranty period.

C. Surface Defects Repair
a. General
1) Surface defects shall include poor joints, voids, honeycomb, stone pockets, ridges, ledges, pits, pin holes, off set, bulges, high spots, rough areas and other irregularities. Exposed surfaces shall be smooth and even, and free from surface defects. Defect repairs shall be subject to Architect-EngineerRegistered Design Professional approval. Provide special attention to fine honeycomb that occurs when concrete is cast against steel and plastic and at interior and exterior corners.
b. Repair of defective areas
1) Fill depressions with matching color-patching mixture, approved by Architect-EngineerRegistered Design Professional.
2) Surfaces in exposed locations shall be true, flat planes. Grind down bulges, high spots, ridges and other projecting parts.
c. For crack repair, use epoxy injection materials approved by Architect-EngineerRegistered Design Professional.
d. Repair rejected concrete work by removing and replacing with additional construction required by Architect-EngineerRegistered Design Professional.
1) Document repair work to bring concrete work into compliance with Contract Documents and submit documentation to Registered Design Professional for acceptance.

3.10 FIELD QUALITY CONTROL

A. Inspection
1. FIELD QUALITY CONTROL
a. Site tests
1) Concrete testing at Site will be per testing provisions of Section 03300 Cast-in-Place Concrete, except as specified below.
2) Mold and cure four specimens from each sample. Cure three specimens per ASTM C31, and one specimen with, and same as, concrete placed.
3) For slab on grade construction, every other test specimens set shall be concrete beam forms.
4) Test ASTM C31 cured beam specimens per ASTM C78. Number and test time shall be same as specified in Section 03300.
b. Flatness and Levelness Testing
1) Measure finished concrete floors for flatness and levelness in accordance with ASTM E1155 Determining Floor Flatness and Levelness using F-number System.

2) Owner Representative shall direct where to measure F-number values for slab on grade placements.
   a) Trowel finished floors shall achieve composite FF50/FL35 value and minimum FF35/FL24 value for individual floor section.
   b) Float finished floors shall achieve composite FF25/FL20 values and minimum FF18/FL13 value for individual floor sections.
   c) Measurements shall apply across control joints, but not within 2 feet of penetrations. Curling tolerances for these joints shall be limited to 1/8 inch in 2 feet in 6 months.
   d) Floor measurements shall be taken by Testing Agency within 24 hours to placement and reported to Contractor and Owner Representative within 48 hours and before next slab placement.
   e) Where F-numbers are less than specified composite, adjust placement operations to ensure compliance. Submit adjusted procedures to Owner Representative before proceeding with additional slab placements.
   f) Where F-numbers for local conditions are less than minimum specified, submit, in writing, proposed corrective actions to Owner Representative for approval. Do not proceed with further slab placements without Owner Representative's approval.

END OF SECTION

Revision History	
Date	**Rev. No.**
A	0
B	0
C	0
D	0
E	0
F	0
02-19-09	0

SM/djo
P:__PROJECTS_SF07\SF070003.0001NSLS II CCWF EXPANSION\SPC\03315.DOC

THIS PAGE INTENTIONALLY LEFT BLANK

SECTION 03600

GROUT

PART 1 GENERAL

1.1 SUMMARY

A. Section Includes
1. Grout where shown on Drawings or as specified.

B. Related Sections
1. Cast-In-Place Concrete - Section 03300.
2. Structural Steel - Division 5.
3. Mechanical Equipment - Division 15.
4. Electrical Equipment - Division 16.

1.2 REFERENCES

A. ASTM C 109 Test Method for Compressive Strength of Hydraulic Cement Mortars.

B. ASTM C-307 Test Method for Tensile Strength of Chemical-Resistant Mortars, Grouts, and Monolithic Surfacings.

C. ASTM C 476 Standard Specification for Grout for Reinforced and Non-reinforced Masonry.

D. ASTM C-579 Test Methods for Compressive Strength of Chemical Resistant Mortars and Monolithic Surfacings.

E. ASTM C-580 Test Method for Flexural Strength and Modulus of Elasticity of Chemical-Resistant Mortars, Grouts, and Monolithic Surfacings.

F. ASTM C 939 Test Method for Flow of Grout for Preplaced-Aggregate Concrete.

G. ASTM C 1107 Standard Specification for Packaged Dry, Hydraulic-Cement Grout (Non-Shrink).

H. CRD C-621 Corps of Engineers specification for Non-Shrink Grout.

1.3 SYSTEM DESCRIPTION

A. Arrange for grout manufacturer to provide authorized representative on site to monitor the production and placement of grout. Grout manufacturer shall certify the procedures, quality and installation of grout.

B. Defective material or improper workmanship at project site may be rejected regardless of previous inspections.

C. Remove rejected material, including associated work, and provide new materials and work that conform to Contract Documents.

D. Alternatively, repair rejected material or work. Submit written request as specified under Article Submittals, but do not proceed until Registered Design Professional approves repair and methods. If Registered Design Professional does not approve repair request, remove rejected material, and provide new materials including associated work.

E. Provide removal and replacement, or repair, at no additional cost to Owner, and pay costs because of delay caused by rejection and corrective action.

F. Provide and maintain temporary protection to prevent damage to adjacent surfaces when installing grout.

G. Provide and maintain temporary protection to prevent damage to grout during installation and curing. Leave protection in place until ensuing operations are completed.

1.4 SUBMITTALS

A. Furnish submittals for items that are identified in this Section by different typefaces and bracketed codes (e.g. *Item [L]*). Refer to Section 01340 for definition of codes, submittal types, and administrative requirements governing submittal procedure.

B. Additional submittal requirements about this Section are specified under this Article.

1.5 PRODUCT DELIVERY, STORAGE AND HANDLING

A. Deliver packaged materials to project site in their original unopened containers, packages, and bundles, bearing labels that identify manufacturer's name, brand name, type, and grade.

B. Properly store and handle material. Replace damaged or unsuitable material with new material before installation at no additional cost to Owner.

C. Grout stored beyond manufacturer's recommended shelf life shall not be used.

1.6 PROJECT CONDITIONS

A. Verify location and bearing elevations or setting surfaces before proceeding with installation. Perform the verification in time to permit necessary corrections without delaying project.

PART 2 PRODUCTS

2.1 MATERIALS

A. Non-Shrink Grout
   1. Premixed, non-shrink, non-metallic grout consists of aggregate base, portland cement and sand, and with necessary plasticizers, densifiers and other control ingredients.
   2. Non-Shrink grout shall conform to CRD - 621 requirements.
   3. Non-Shrink grout shall conform to ASTM C 1107, Grade B (or Grade C).
   4. Non-Shrink grout manufacturers:
      a. Dayton Superior "Sure-Grip High Performance Grout"
      b. Euclid Chemical Company, Inc. "Hi-Flow Grout"
      c. Master Builders, Inc. "Set Grout"
      d. Sika Corporation "Sika Grout 212"
      e. Five Star Products, Inc. "Five Star Grout"

B. Epoxy Grout
   1. Premixed Epoxy Grout consists of thermosetting resin base, with inert fillers suitable for use on dry or damp surfaces.
   2. Epoxy Grouts shall meet minimum characteristics as follows:
      a. Working Time At

50	degF	2.0 Hours
70	degF	1.5 Hours
90	degF	1.0 Hours

      b. Compressive Strength per ASTM C 579 At

73	degF	14,000 psi	at 28 Days
170	degF	10,000 psi	at 28 Days

      c. Tensile Strength 2,200 psi per ASTM C-307.
      d. Flexural Modulus of Elasticity per ASTM C 580.

73	degF	2,1000,000 psi
140	degF	1,700,000 psi
170	degF	800,000 psi

      e. Creep Resistance at 600 psi, 140 degF, maximum = 4,000 in/in.
   3. Epoxy grout manufacturers:
      a. Dayton Superior "Sure-Grip Epoxy Grout (J54)"
      b. Euclid Chemical Company, Inc. "E^{3-}Series, E^3-F, E^3-G, E^3-H"
      c. Master Builders, Inc. "Ceilcote 648 CP Plus"
      d. Sika "Sikadur 42, Grout Pak"
      e. Five Star Products, Inc. "Five Star Epoxy Grout"

C. Utility Grout and Dry Pack Grout
   1. Utility Grout: mixture of fine, natural sand aggregate and portland cement, mixed with minimum amounts of water per ASTM C 476.
   2. Dry Pack Grout: premixed, non-shrink, non-metallic, dry grout consisting of aggregate base, portland cement, and sand, with necessary plasticizers, densifiers and other control ingredients.

3. Utility Grout and Dry Pack Grout shall conform to CRD-C 621 Specifications for non-shrink grouts.
4. Utility Grouts and Dry Pack Grouts shall have minimum compressive strength of 5,000 pounds per square inch at 28 days.
5. Utility grout manufacturers:
   a. Dayton Superior “Sure-Grip Utility Grout”
   b. Euclid Chemical Company, Inc. “N-S Grout”
   c. Master Builders, Inc. “Construction Grout”
   d. U.S. Grout Corporation “NBEC“
   e. W.R. Meadows, Inc. “588 Grout”
6. Dry Pack grout manufacturers:
   a. Dayton Superior “Sure-Grip Grout Dri-Pak”
   b. Euclid Chemical Company, Inc. “Dry Pack Grout”
   c. W.R. Meadows, Inc. “Pac-It Grout”

D. Fluid Non-Shrink Grout with Extended Working time
1. Fluid nonshrink grout cement based grout with extended working time shall be Grade B (Post Hardening Volume Controlled) or Grade C (Combination Volume Controlled).
2. Fluid nonshrink grout shall conform to ASTM C 1107, when tested at fluid consistency of 25 to 30 seconds per ASTM C 939 at temperature extremes of 45 and 90 degF and with extended working time of 30 minutes at temperature extremes of 45 and 90 degF.
3. Fluid nonshrink grout shall have minimum strengths of 6500 psi at 3 days when mixed at fluid consistency.
4. Fluid Grout with Extended Working Time Manufacturers:
   a. U.S. Grout Corporation “Five Star 110”
   b. Master Builders, Inc. “Masterflow 928”

PART 3 EXECUTION

3.1 SURFACE PREPARATION

A. Ensure that contact surfaces are free of dust, dirt, standing water, oil, grease, laitance, and other contaminants that would be detrimental to proper installation and performance of specified grout.

B. For cement based grouts, thoroughly wet concrete contact surfaces for 24 hours before grouting. Remove standing water before placing grout.

C. Apply epoxy grouts to dry contact surface.

D. Maintain contact surface temperature between 50 and 80 degF. For hot and cold weather application, carry out work in agreement with grout manufacturer’s recommended procedures.

3.2 INSTALLATION

A. Perform all work under supervision of Manufacturer’s authorized representative.

B. Mix specified grout according to manufacturer's recommended procedure. Place grout within roughly 30 minutes of mixing.

C. Install specified grout to prepared surface per manufacturer's printed instructions.

D. Cure grout in agreement with manufacturer's recommended procedure.

E. Place Non-Shrink grout between concrete and column base plates unless otherwise noted on Drawings or specified.

END OF SECTION

Revision History	
Date	**Rev. No.**
A	0
B	0
C	0
D	0
E	0
F	0
02-19-09	0

SM/djo
P:__PROJECTS_SF07\SF070003.0001NSLS II CCWF EXPANSION\SPC\03600.DOC

THIS PAGE INTENTIONALLY LEFT BLANK

SECTION 04810

MASONRY ASSEMBLIES

PART 1 GENERAL

1.1 SUMMARY

A. Section Includes:
   1. Provide inspected masonry work, complete, as shown or specified.
   2. This Section includes unit masonry assemblies consisting of the following:
      a. Concrete masonry units.
      b. Mortar and grout.
      c. Reinforcing steel.
      d. Masonry joint reinforcement.
      e. Ties and anchors.
      f. Miscellaneous masonry accessories.

B. Related Work Specified in Other Sections:
   1. Sheet metal flashing and trim for exposed sheet metal flashing – Division 7.
   2. Calking and sealing – Division 7.
   3. Firestopping at tops of masonry walls and openings on masonry walls – Division 7.
   4. Concrete for precast concrete lintels – Division 8.

C. Products Installed But Not Furnished Under This Section
   1. Miscellaneous metal fabrication items built into masonry - Division 5.
   2. Hollow metal frames built into masonry - Division 8.

1.2 DEFINITIONS

A. Reinforced Masonry: Masonry containing reinforcing steel in grouted cells.

1.3 PERFORMANCE REQUIREMENTS

A. Provide unit masonry that develops the following net-area compressive strengths (f'm) at 28 days. Determine compressive strength of masonry from net-area compressive strengths of masonry units and mortar types according to Tables 1 and 2 in ACI 530.1/ASCE 6/TMS 602.
   1. For Concrete Unit Masonry: f'm = 1500 psi.

B. Unit strength test method shall be used to determine the compressive strength for each wythe.

1.4 QUALITY ASSURANCE

A. Reference Standards
   1. Use materials and methods per the current applicable rules, regulations or standards of the following associations unless specifically noted otherwise:
      a. National Concrete Masonry Association (NCMA).
      b. New York State Building Code, latest edition.
      c. Portland Cement Association (PCA).
      d. Building Code – International Building Code 2006.
      e. American Concrete Institute (ACI) (ACI 530-99) Building Code Requirements for Masonry Structures.

B. Sample Panel
   1. Prior to laying of masonry, construct a sample wall panel of each type of exposed masonry work, complete including bond pattern and joint tooling, not less than 4 feet high by 6 feet wide, in a location on the site that will not interfere with construction operations. Use specified materials and methods in construction of sample panel. Remove and rebuild sample panel as often as required to obtain the acceptance of the Owner's Representative, changing methods as directed. When sample panel is accepted, match masonry work to the appropriate sample panel. Leave sample panel in place until masonry work has been completed and accepted. After acceptance, remove and dispose of sample panel, off site.

C. Pre-construction Testing
   1. A testing laboratory provided by the Owner shall test masonry materials and inspect masonry construction to insure that the requirements of the Building Code and ACI 530.1-99 are fulfilled.
      a. Clay Masonry Unit Test: For each clay masonry unit indicated, per ASTM C 67.
      b. Concrete Masonry Unit Test: For each concrete masonry unit indicated, per ASTM C 140.
      c. Mortar Test: For mortar properties per ASTM C 270.
      d. Grout Test: For compressive strength per ASTM C 1019.
      e. Fire Resistance Ratings: Where indicated, provide materials and construction identical to those of assemblies with fire resistance ratings determined per ASTM E 119 by a testing and inspecting agency, by equivalent concrete masonry thickness, or by other means, as acceptable to authorities having jurisdiction.
         1) The Contractor shall provide the required quantity of materials for testing in size and shape required to the testing agency.

D. Grouted/Reinforced Masonry Walls
   1. Sample panel for reinforced masonry: Prior to laying of reinforced masonry, construct a wall panel of each type of reinforced masonry work including bond pattern and tooling not less than 4 feet high by 6 feet wide in a location that will not interfere with construction operations. Use specified methods and materials including specified grout, reinforcing bars, bar positioners and other accessories. Remove and rebuild sample panel as often as required to obtain the acceptance of the Owner's Representative, changing methods as directed. When sample panel is accepted, match masonry work to the appropriate sample

panel. Leave sample panel in place until masonry work has been completed and accepted. After acceptance, remove and dispose of sample panel, off site.

2. The masonry foreman responsible for placement of grouted reinforced masonry is required to hold certification from the International Masonry Institute (IMI) training program for reinforced unit masonry assemblies.

1.5 SUBMITTALS

A. Furnish submittals for items that are identified in this Section by a different typeface and a bracketed code (e.g., *Item [L]*). Refer to Division 1 General Requirements for definition of codes for types of submittals and the administrative requirements governing submittal procedure. General submittal requirements pertaining to this Section are specified herein under this Article.

B. *Substitute Masonry Units [S]*: Samples shall be submitted of only substitute masonry units and colors not specified.

C. *Control Joints [D]*: Submit shop drawings of control joints to show design and components.

D. *Fabricated Flashings [D]*: Submit shop drawings of fabricated flashings at shelf angles, end dam units, corner units, and metal drip edges.

E. *Pre-Construction Masonry Conference [R]:* Representatives of the Contractor, Owner, and Testing Agency shall meet at the office of the Owner's Representative. Submit proposed materials, details, and sequence of construction for review at least 2 weeks prior to the meeting. Provide minutes of meeting to all parties, including list of attendees and decisions.

F. *Steel Bar Reinforcement [D]:* Submit shop drawings showing size and location of reinforcing bars. Include wall elevations showing placement of reinforcing at bond beams, lintels, wall openings, parapets, load-bearing walls and vertical reinforcement.

G. *Material Certificates [C]*: Material Certificates: Signed by manufacturers certifying that each of the following items complies with requirements:
   1. Each type of masonry unit required.
      a. Include size-variation data for brick, verifying that actual range of sizes falls within specified tolerances.
      b. Include test data, measurements, and calculations establishing net-area compressive strength of masonry units.
   2. Each cement product required for mortar and grout, including name of manufacturer, brand, type, and weight slips at time of delivery.
   3. Each combination of masonry unit type and mortar type. Include statement of net-area compressive strength of masonry units, mortar type, and net-area compressive strength of masonry determined according to Tables 1 and 2 in ACI 530.1/ASCE 6/TMS 602.
   4. Each material and grade indicated for reinforcing bars.
   5. Each type and size of joint reinforcement.
   6. Each type and size of anchor, tie, and metal accessory.

1.6 DELIVERY, STORAGE, AND HANDLING

A. Handle units in manner to prevent damage to same. Do not place units directly on the ground or dump them in piles.
   1. Deliver masonry units to the site on pallets.
   2. Cover all masonry units with waterproof covering to prevent water absorption from either rain or condensation.

B. Deliver mortar materials to the site in their original, unopened containers bearing label identifying manufacturer's name and brand, and store under cover in a dry place, so as to prevent absorption of water and intrusion of foreign matter.

C. Protect reinforcing, ties and anchors from contact with soil. Store metal items to prevent corrosion and accumulation of dirt and oil. Remove rust and other coatings which will interfere with bond.

D. Store cementitious materials on elevated platforms, under cover, and in a dry location. Do not use cementitious materials that have become damp.

E. Store aggregates where grading and other required characteristics can be maintained and contamination avoided.

1.7 PROJECT CONDITIONS

A. Protection
   1. Protect masonry against damage from water, snow, frost, freezing and other weather conditions. Cover the tops of walls exposed to the weather with a non-staining, waterproof cover at completion of each day's work. Similarly protect at all times partially completed walls not being worked on. Cover walls exposed to the weather if rain occurs prior to hardening of mortar.
   2. Do not apply uniform floor or roof loads for at least 12 hours and concentrated loads for at least 3 days after building masonry walls or columns.
   3. Stain Prevention: Prevent grout, mortar, and soil from staining the face of masonry to be left exposed or painted. Immediately remove grout, mortar, and soil that come in contact with such masonry.
      a. Protect base of walls from rain-splashed mud and from mortar splatter by coverings spread on ground and over wall surface.
      b. Protect sills, ledges, and projections form mortar droppings.
      c. Protect surfaces of window and door frames, as well as, similar products with painted and integral finishes, from mortar droppings.
      d. Turn scaffold boards near the wall on edge at the end of each day to prevent rain from splashing mortar and dirt onto completed masonry.

4. Cold-Weather Requirements: Do not use frozen materials or materials mixed or coated with ice or frost. Do not build on frozen substrates. Remove and replace unit masonry damaged by frost or by freezing conditions. Comply with cold-weather construction requirements contained in ACI 530.1/ASCE 6/TMS 602.
    a. Cold-Weather Cleaning: Use liquid cleaning methods only when air temperature is 40 deg F and above and will remain so until masonry has dried, but not less than 7 days after completing cleaning.
5. Hot-Weather Requirement: Protect unit masonry work when temperature and humidity conditions produce excessive evaporation of water from mortar and grout. Provide artificial shade and wind breaks and use cooled materials as required.
    a. When ambient temperature exceeds 100 deg F, or 90 deg F with a wind velocity greater than 8 mph, do not spread mortar beds more than 48 inches ahead of masonry. Set masonry units within 1 minute of spreading mortar.
6. Brace and protect walls during erection as required to protect persons, property and the work from damage due to winds or other causes. Protect finish masonry walls from damage due to subsequent construction operations. Remove and replace damaged face units.

1.8 SEQUENCING AND SCHEDULING

A. Coordinate the work of this Section with the work of other trades, under this Contract or other contracts, doing adjacent or concurrent work so as to insure proper, timely, and adequate interface.

PART 2 PRODUCTS

2.1 MATERIALS

A. Concrete Masonry Units
    1. Hollow Concrete Masonry Units: Per ASTM C 90.
    2. Solid Concrete Masonry Units: Per ASTM C 90.
    3. Use masonry units of medium weight made of concrete weighing between 105 and 125 lbs. per cubic foot, with normal weight aggregate per ASTM C 33 or lightweight aggregate per ASTM C 331 or a combination of the 2 weights.
    4. Provide structurally sound units that are free from defects that interfere with setting or that impair the strength or performance of the construction. Provide block free from broken corners or edges, chips, pops, stain, slick spots and other surface blemishes, and that are uniform in color and texture.
    5. Provide modular sized units, 8 inch x 16 inch nominal face size, of thickness indicated. Provide bullnose units, lintel units, bond-beam units, end units, sash units, and other special shape units as required to complete the work, matching the stretcher units in size, color and texture. Provide special size units where so indicated.

B. Precast Concrete Lintels
    1. Precast Concrete Lintels: Provide precast concrete lintels of size and with reinforcing bars as shown. Concrete shall have a 3000 psi 28-day strength and shall have attained full

strength prior to installation. Fabricate units at least 16 inches longer than width of masonry opening; where exposed in the finished wall, make units to length for jointing with stretcher units in the bond pattern used in the wall.

C. Mortar
   1. Mortar: Per ASTM C 270. Use the "Proportion Specifications" method.
   2. Portland Cement: ASTM C 150, Type I or II, except Type III may be used for cold-weather construction.
   3. Hydrated Lime: ASTM C 207, Type S.
   4. Sand: ASTM C 144.
   5. Portland Cement-Lime Mix: Packaged blend of portland cement complying with ASTM C 150, Type I or Type III, and hydrated lime complying with ASTM C 207.
   6. Mortar Cement: ASTM C 1329.
   7. Masonry Cement: ASTM C 91.
   8. Use the following mortar types for the conditions defined:
      a. Type S
         1) Load-bearing walls
      b. Type N
         1) Interior walls.
         2) Firewalls.
   9. *Mortar Tests [T]*: Perform evaluation tests of mortar per ASTM C 780, to show compliance with ASTM C 270 as follows:
      a. Compressive strength: as defined for "type" specified
      b. Water retention (flow after suction)
      c. Air content

D. Grout
   1. *Portland Cement Grout [T]*: Per ASTM C 476, with 2000 psi 28-day strength, when sampled and tested, per ASTM C 1019 and 8 inch to 11 inch slump per ASTM C 143, modified as follows:
      a. Use only portland cement per ASTM C 150, Type I, II or III.
      b. Use only hydrated lime per ASTM C 207, Type S.
      c. Use only aggregate per ASTM C 404.
      d. For spaces less than 2 inches wide, use fine-aggregate grout.
      e. Admixtures shall contain no more than 0.5% calcium chloride by weight of admixture.
   2. *Epoxy Grout [P]*: Per ANSI A118.3, non-staining type, standard white color. Use for glazed block walls where scheduled.
      a. Laticrete International Inc. "Latapoxy SP-100 Stainless Epoxy Grout".

E. Joint Reinforcement
   1. Joint Reinforcement: Cold drawn steel wire per ASTM A 82 and hot dipped galvanized (after fabrication) per ASTM A 153, Class B-2, 1.5 oz. per square foot zinc coating; No. 9 gage deformed longitudinal and plain cross wires, and out-to-out spacing of longitudinal wires approximately 2 inches less than nominal wall thickness.
      a. For structural facing tile, use No. 11 gage wire.

2. For single wythe masonry walls, No. 9 gage wire ladder type at vertically-reinforced walls so crossrods occur at webs (16" intervals):
    a. Dur-O-Wal, Inc., "Ladur".
    b. Hohmann & Barnard, Inc., "220 Ladder Mesh".
    c. Masonry Reinforcing Corp. of America, "Series 200, 2 Wire System".
    d. National Wire Products Industries, "Tie-Wal" Ladder Type.
3. Grout Retainer:
    a. Wire Bond "Grout Stop"
    b. Heckman "Metal Lath 268"
    c. Dur-O-Wal, Inc. "Dur-O-Stop"
    d. Hohmann & Barnard, Inc., MGS, "Mortar/Grout Screen"

F. Wall Reinforcement
1. Wall Reinforcement: For vertical reinforcement, and horizontal reinforcement in bond beams and lintels; deformed billet steel bars per ASTM A 615, Grade 60.

G. Metal Ties And Anchors
1. Provide all masonry ties and anchors with hot-dipped galvanized finish (after fabrication) per ASTM A 153, Class B-2, 1.5 oz. per square foot zinc coating.
2. Masonry to Steel Framing Anchors: 2-piece galvanized steel, ¼ inch diameter wire anchors with triangular ties. Weld 1 piece to framing and imbed other piece in masonry. Provide type that allows horizontal and vertical movement.
    a. Dur-O-Wall Inc. "D/A 701-708 Triangle Ties" and "D/A 709 Anchor".
    b. Heckmann Building Products Inc. "316 Ties" and "315 Anchor".
    c. Hohmann & Barnard Inc. "VWT Vee Wall Ties" and 359 Anchor".
    d. Masonry Reinforcing Corp. of America "1100 Ties" and "Type-I-1000 Anchor".
    e. National Wire Products Industries "200 Series Ties" and "100 Anchor".
3. Joint Stabilizing Anchors: Provide at expansion and control joints where indicated, to allow expansion, contraction or isolation at joints. Construct of 2 galvanized metal sleeves connected together with 2 galvanized steel wires designed to slide in the sleeve ends.
    a. Dur-O-Wal "DA 2200 Joint Stabilizing Anchor".
    b. Hohmann & Barnard "Slip Set" Stabilizer.
    c. Masonry Reinforcing Corp. Of America "1700 Control Joint Anchor".
4. Reinforcing Bar Positioners:
    a. Wire Bond Series 3400 or 3401, vertical and horizontal.
    b. Dur-O-Wall, D/A 811 Series, vertical; D/A 812 horizontal.

H. Masonry Flashing
1. Embeddable Flashing Device: High density polyethylene composition molded .0624 inch thick flashing pan with .3125 inch perimeter flanges and concaved weep spout.
    a. Masonry Specialty Products. Inc., "Block-Flash" (877-352-7448).

I. Joint Materials

1. Flexible Joint Filler Strips: For use with sash block or built-in between block and concrete as indicated, pre-fabricated rubber or polyvinylchloride, of width to be placed under compression and of shape shown.
   a. Dur-O-Wal Inc. “Rapid Control Joint” or “Rapid Poly-Joint”
   b. Hohmann & Barnard Inc. “VS Series PVC”.
   c. Masonry Reinforcing Corp. of America “Control Joint”
   d. National Wire Products Industries “PVC 001/002” or “RUB 021/022”.
2. Bond Breaker Strip: For concrete masonry unit wall control joints, use one of the following:
   a. Asphalt roofing felt, per ASTM D 226, 15-pound weight.
3. Isolation Gaskets: For use between masonry and steel building frame, use asphalt-impregnated cellular paper, 1/4 inch single thickness or 1/2 inch double thickness to suit conditions:
   a. Williams Products Co, “Everlastic Column Boxboard 5004-3 (1/4”) or 5008-3 (1/2”)”.
4. Expansion Filler: Use in joints between masonry and other construction materials as specified for the 2 conditions.
   a. To maintain fire-rated walls, at abutting terminations with other building materials, at top of masonry walls up to underside of beams or deck, and at other voids where fire-rated construction is required. Use U.L. listed ceramic fiber insulation.
      1) The Carborundum Co. “Fiberfrax Durablanket Insulation:
      2) Thermal Ceramics “Kaowool FireMaster Blanket”.
      3) Tremco “Cerablanket FS”.
   b. To fill voids between abutting masonry and other construction materials where fire-rating is not affected. Closed cell neoprene or PVC foam, board stock of thickness to be under compression when in the joint; except use tubular gaskets where shown.
      1) Hohman & Barnard #NS Closed Cell Neoprene Sponge.
      2) Williams Products, Inc.

J. Masonry Cleaners

1. Job-Mixed Detergent Solution: Solution of 1/2 cup dry measure tetrasodium polyphosphate and 1/2 cup dry measure laundry detergent dissolved in 1 gal. of water.
2. Acidic Cleaner: Manufacturer’s standard-strength cleaner designed for removing mortar/grout stains, efflorescence, and other new construction stains from new masonry without discoloring or damaging masonry surfaces. Use product expressly approved for intended use by cleaner manufacturer and manufacturer of masonry units being cleaned.

PART 3 EXECUTION

3.1 LAYING UP MASONRY

A. Examination
   1. Examine conditions for compliance with requirements for installation tolerances and other conditions affecting performance.
      a. Verify that foundations are within tolerances specified.
      b. Verify that reinforcing dowels are properly placed.
      c. Verify that the structural steel frame and miscellaneous metal work is complete, plumb, secured and properly located to allow masonry work to be installed as detailed and with adequate clearances.
   2. Foundation and steel frame discrepancies:
      a. Notify the Architect Engineer and Owner's Representative in writing of discrepancies.
      b. Foundation and/or steel frame discrepancies: Do not proceed with masonry work until conditions have been corrected.
      c. Foundation discrepancies affecting the masonry work shall be resolved by Foundation Contractor, the Masonry Contractor and the Owner Representative without Owner's extra cost.
      d. Steel Frame discrepancies affecting the masonry work shall be resolved by the Steel Frame contractor, the Masonry Contractor, and the Owner's Representative without Owner's extra cost."
   3. Before installation, examine rough-in and built-in construction to verify actual locations of piping connections.

B. General
   1. Lay out work carefully in advance to make joints, both horizontal and vertical, fit the openings with a minimum of cutting. Provide joints of uniform width. Form corners as true 90 degree angles unless otherwise shown. Exposed units shall be free from chips on faces and exposed edges, and from broken corners.
   2. Construct masonry walls and partitions exposed in the finished work in straight, true and plumb planes. Surfaces of walls and partitions not exposed in the finished work may vary 1/8 inch in 8-foot, vertically from plumb plane, horizontally from a straight true plane.
   3. Start the partitions on concrete floor slabs and extend to roof or floor construction above; except that where partitions are shown to terminate at suspended ceilings, extend partitions a minimum of 4 inches above such suspended ceilings, unless shown otherwise.
   4. Provide expansion joints in masonry work. Between top of masonry walls or partitions and underside of steel or concrete beams, metal deck, or concrete slabs; at ends of masonry walls or partitions abutting other construction, or other masonry walls or partitions except at tooth-bonded intersections; and elsewhere as shown; by packing the space with Expansion Filler. Provide the last course in such walls or partitions of solid units terminating to provide 3/8 inch space minimum.
   5. Step back unfinished masonry where possible, and tooth only where necessary.
   6. Lay masonry units dry. After laying masonry units, remove units that are moved or disturbed, and thoroughly clean and relay with fresh mortar.

7. Mortar:
    a. “Measurement of materials for mortar shall be by volumetric measure and be controlled and accurately maintained. Measurement by “Shovel full” shall not be permitted.”
    b. Mortar shall be retempered as required to maintain consistency. Dispose off site of mortar which has begun to stiffen, set or which is over 2-1/2 hours old.
    c. Follow color manufacturer’s recommendations for re-temper colored mortar to avoid color mis-match.”
8. Stopping and Resuming Work: In each course, rack back 1/2-unit length for 1/2 running bond do not tooth. Clean exposed surfaces of set masonry, wet masonry units lightly if required, and remove loose masonry units and mortar before laying fresh masonry.
9. Built-in Work: As construction progresses, build in items specified under this and other Sections of the Specifications. Fill in solidly with masonry around built-in items.
10. Where built-in terms are to be embedded in cores of hollow masonry units, place a grout retainer in the in joint below and rod mortar or grout into core.
11. Fill cores in hollow concrete masonry units with grout 24 inches under bearing plates, beams, lintels, posts, and similar items, unless otherwise indicated.
12. Provide mortar beds on top of walls where walls support steel framing or precast concrete members. Build up mortar beds to provide elevations required to receive such members. Trowel surface of mortar beds true and level.
13. Provide or leave openings, holes, chases or other modifications in the masonry work as shown and as required for the passage of pipes, ducts, conduits, and other work. After items have been installed, close up the remaining portions of the openings, holes and chases with masonry to match adjacent surfaces. Rake out joints indicated to be sealed or calked, 1/2 inch deep. Rake out all joints to receive flashing, 1-1/2 inch deep.
14. Set and build-in to the masonry work, items so furnished. Locate and place the items carefully and secure the parts in place rigidly, per instructions of furnishing party. Set anchorages in solid mortar.
15. Fill the spaces between metal frames and masonry with grout.
16. Use cores filled with mortar, or provide solid units for anchorage in locations where handrails, plumbing fixtures, utility cabinets and similar items are attached.
    a. Provide solid units for anchoring of frames and track of sliding fire doors, per requirements of the Owner’s Underwriters.
17. Construct masonry walls and partitions of proper thickness to receive pipe, ducts, conduit and similar core-run items, whether or not so dimensioned. If room sizes or critical space requirements are affected by the need for larger units, obtain approval from the Owner’s Representative before proceeding.

C. Concrete Masonry Units
    1. Lay up concrete masonry units in common or running bond. Align vertical joints in a straight plumb line. Keep horizontal joints level. Work joints so as to bond properly with facing and backing materials. Provide joints of uniform width and thickness, and not exceeding 1/2 inch. Tool exposed joints in the finished work slightly concave. Strike off other joints flush.

2. Lay up units with cells in vertical and in such a manner that the main bearing webs come into proper relation for the bearing on units below. Lay units with full mortar coverage on horizontal and vertical face shells.
    a. Bed webs in mortar in starting course on footings and in all courses of piers, columns, and pilasters, and where adjacent to cells or cavities to be filled with grout.
    b. For starting course on footings where cells are not grouted, spread out full mortar bed, including areas under cells.
3. Form external vertical (and horizontal) corners, with bullnose concrete masonry units. Form internal corners square. Form exposed ends of walls and partitions with flush end units. Tie intersecting walls with metal ties, joint stabilizing anchor or with wall reinforcing at 16 inches on center vertically and provide a control joint. Provide a course of solid units at top of all walls and partitions. Provide 2 courses of solid units, or fill cores and voids with grout, directly under framing that bears on walls. All masonry below grade shall be grouted solid.
    a. Use bonding units where brick header courses align with horizontal joint line in the work.
4. Cut masonry units with motor driven saws to provide clean, sharp, unchipped edges.
5. Install reinforced masonry lintels above openings in masonry walls except where steel or precast concrete lintels are shown.
6. Where lateral support of walls is not provided by piers, cross-walls, floors or roofs within the criteria specified below, provide lateral support clips to structural framing at not over 4 feet on center or with metal ties or anchors as specified, or with piers:
    a. Bearing walls: 18 times the nominal wall thickness.
    b. Non-bearing walls: 36 times the nominal wall thickness.

D. Reinforced Unit Masonry
1. Provide reinforced walls or piers in locations shown. Install vertical reinforcing in block cores, of sizes and at spacings shown. Use vertical bar positioners. After mortar has set, fill cores containing reinforcing with grout. If only segments of a wall are reinforced, provide setting mortar on cross-webs adjacent to segment, during laying, to contain the grout in the reinforced cores.
    a. Construct reinforced blast-resistant masonry block walls where and as shown.
2. Temporary Formwork and Shores: Construct formwork and shores to support reinforced masonry elements during construction.
    a. Construct formwork to conform to shape, line, and dimensions shown. Make it sufficiently tight to prevent leakage of mortar and grout. Brace, tie, and support forms to maintain position and shape during construction and curing of reinforced masonry.
    b. Do not remove forms and shores until reinforced masonry members have hardened sufficiently to carry their own weight and other temporary loads that may be placed on them during construction.
3. Placing Reinforcement: Comply with requirements of ACI 530.1/ASCE 6/TMS 602.
4. Grouting: Do not place grout until entire height of masonry to be grouted has attained sufficient strength to resist grout pressure.
    a. Comply with requirements of ACI 530.1/ASCE 6/TMS 602 for cleanouts and for grout placement, including minimum grout space and maximum pour height.

E. Lintels And Bond Beams

1. Provide concrete masonry lintel units matching the stretcher units in size and texture for lintels at locations with openings greater than 24 inches. Place reinforcing bars as shown and fill void with grout. Construct lintel with a minimum of 8 inches of bearing at each end. Where lintel is exposed in final construction, match the bond pattern used in the wall. Cure field fabricated lintels before handling and installing or temporarily support built-in-place lintels until cured.
2. Provide precast lintel units in textures, color, finish and strength to match adjacent masonry units with reinforcing bars indicated. Construct precast lintels with a minimum of 8 inches bearing on each side. Provide precast lintels with the same curing process as the adjacent masonry units.
3. Provide concrete masonry bond beam units or other methods of grout confinement for bond beams. Place reinforcing bars as shown and fill void with grout. For continuous bond beams, lap reinforcing bars 12 inches minimum and provide bars around corners. Tie bond beams to structural members as shown.

F. Steel Lintels

1. Receive, set, and anchor steel lintels. Center lintels over the openings and set level. In all cases, install horizontal leg in level planes, or tilted slightly in towards the building; never tilt horizontal leg away from the building. Construct lintel with a minimum of 8 inches of bearing at each end.

G. Control Joints

1. Construct control joints in concrete masonry unit or expansion joints in brick-concrete masonry unit wall construction to provide for differential movement, at not over 20 feet on center, or 2.5 times the wall height whichever is less, unless otherwise indicated. Construct vertical control joints at natural weaknesses in the walls, such as door and window openings, and in other locations shown on the Drawings, or as indicated below:
   a. At locations where changes in wall height or thickness occur.
   b. At windows and doors to 6’-7” wide, provide a control joint on one side of the opening.
   c. At doors and windows over 7’-7” wide, provide control joints at both sides of the opening.
   d. At doors and windows with lintels, provide control joint at end of lintel above opening. At windows, provide control joint along jamb and extend down along this line to bearing.
   e. Provide movement joints at junctions of interior masonry walls with exterior walls.
   f. Provide horizontal joint, 3/8” min. for veneer expansion below all shelf angles.
2. Construct typical control joints and expansion joints by breaking the running bond in the wall with a continuous thru-wall vertical joint 3/8 inch wide and provide 1/2 inch deep sealant space.
   a. In concrete masonry unit work, construct the control joint by laying up the block with the half core end at the joint; as concrete masonry units are laid up, line one side of the joint with 1 ply of Bond Breaker Strip and fill the core and web space formed at the joint with mortar, packed in place, to form a keyed joint which will withstand lateral pressure.

3. Where control joints are located at the end of lintels, install Bond Breaker Strip in bed joint of lintel.

H. Isolation Joints
1. Provide isolation joints wherever masonry encloses a steel column and elsewhere as shown. Construct joints by separating the masonry from the steel with Isolation Gaskets. Do not compress the Isolation Gasket.

I. Joint Reinforcement
1. Reinforce concrete masonry unit walls and partitions with joint reinforcement except:
   a. Where veneers are tied to concrete back-up.
   b. Where metal ties are specified or specifically noted or shown.
2. Install horizontal joint reinforcing continuously in every second horizontal concrete masonry unit joint or at 16 inches on center vertically, calculated to provide reinforcement in the top joint of each wall or partition. Supplement the reinforcement at openings in walls or partitions with additional reinforcing in the joints immediately above and immediately below the opening, if such joints are not reinforced by the normal placement of the reinforcement. The additional reinforcing shall be the same as used in the wall or partition and of length equal to the width of the opening plus 4 feet centered on the opening. Terminate reinforcing at each side of control joints. Bend and extend reinforcing around corners and through intersections by cutting, bending and lapping. Lap reinforcing 6 inches at joints between pieces. Embed longitudinal wires completely in mortar.

J. Metal Ties And Anchors
1. Install metal ties and anchors to bond and to secure masonry work, as shown or as follows:
   a. Tie masonry wythes together, where other types of bonding are not specified or shown, with metal ties spaced not over 32 inches on center horizontally and 16 inches on center vertically, staggered.
   b. Tie ends of masonry walls and partitions to abutting construction with specified joint stabilizing anchors spaced at 16 inches on center vertically.
   c. Tie masonry walls enclosing a steel-framed building to each steel column not more than 24 inches vertically, and to each spandrel beam with metal ties spaced 32 inches on center horizontally.
2. Secure metal ties rigidly in place, to masonry by fully embedding in mortar, to steel by welding. In vertically cored masonry, position ties over a vertical joint when tying wythes. In cored masonry, fill end cores of units when tying wall ends.

K. Field Inspections / Quality Assurance
1. Special masonry inspections shall not be required for empirically designed masonry that is part of non essential buildings as defined by the IBC.
   a. Structural testing shall, however, be required for empirically designed masonry that is part of essential buildings designed for seismic resistance. Testing shall be Level 1 as defined by Table 1708.1.2 of the IBC.

L. Masonry Waste Disposal
   1. Unused masonry materials are the property of the Contractor and, at the completion of his Work, must be removed from the site.
   2. The contractor may request the approval to use clean masonry debris as a site fill material. Upon approval by the Owner's Representative, the Contractor may:
      a. Dispose of clean masonry units, mortar, grout, cement and sand by crushing the masonry debris into units of 4 inches or less in all dimensions and mix the debris with 2 parts of specified material for each part of masonry debris per soil and fill materials in Division 2.
      b. Maintain masonry fill debris below 18 inches of finish grade.
   3. Remove excess masonry waste and dispose of all materials legally that are not used as fill on the site.

M. Cleaning And Pointing
   1. Clean exposed surfaces of masonry thoroughly to remove mortar, dirt, paint spots, stains, efflorescence and defacements. Protect exposed adjacent materials during installation and cleaning operations. Remove mortar droppings from aluminum and other metal surfaces daily. Do not use sand blast, or other materials or methods that will stain, discolor, or damage the masonry surfaces in any way.
   2. Point up joints full and even and to match tooling used on wall. Cut out and point up defective joints during or before cleaning. Clean out and provide proper-depth recesses for calking and sealing work.
   3. Brush clean concrete masonry units as the work progresses. Allow mortar droppings on such surfaces to dry and then remove by trowel, block-rubbing and brushing.
   4. Protect surfaces which could be harmed by cleaning operations.
   5. Remove all excess materials, debris, equipment, sample panels, etc. From site upon completion and acceptance of masonry work.

END OF SECTION

Revision History	
Date	**Rev. No.**
A	0
B	0
C	0
E	0
F	0
02-19-09	0

DS/djo
C:\D\TIMSDATASF\BROOKHAVEN_NATIONAL_LABORATORY\SF070003\200-PROJEXEC\280-SPEC\04810.DOC

SECTION 05120

STRUCTURAL STEEL

PART 1 GENERAL

1.1 SUMMARY

A. Section Includes:
   1. Structural steel framing shown or noted on Structural Drawings and work noted "Structural Steel" ("SS") on Architectural Drawings. Refer to Architectural Drawings for details and dimensions of items shown on Structural Drawings that are not so detailed or dimensioned.
   2. Structure design is based on shown steel sections. Intent of Contract Documents is that designated shapes, thickness, arrangements and grades of material be provided.
      a. If for any reason sections shown are not readily available, substitute sections may be proposed for use. Registered Design Professionals shall approve Substitutions before submission of shop drawings.
      b. Coordinate fit of proposed substitution with Architectural details and structural capacity.
      c. Incorporate approved substitute members in structures at no additional cost to Owner.

B. Related Work Specified Under Other Sections
   1. Concrete bearing surfaces, setting of Anchor Rods in concrete - Division 3.
   2. Setting of Anchor Rods in masonry and grout pads at masonry wall bearing locations - Division 4.
   3. Metal Roof Deck - Section 05310.
   4. Metal Floor Deck - Section 05321.
   5. Grout - Section 03600.
   6. Miscellaneous metal work, consisting of steel framing shown on Architectural Drawings that is not noted "Structural Steel" or with notations of similar intent, and of miscellaneous iron work - Section 05500.
   7. Fasteners for anchorage of wood nailers - Division 6.
   8. Alteration work related to existing construction for installation of structural steel, including removal of materials other than structural framing to provide access to area of work and to permit installation of new steel work.

C. Products Furnished But Not Installed Under This Section
   1. Anchor Rods for columns.
   2. Anchor Rods for beams supported on concrete or masonry construction.

1.2 REFERENCES

A. AISC References
   1. AISC "Manual of Steel Construction - Allowable Stress Design", Ninth Edition, including:
      a. "Specification for Structural Steel Buildings - Allowable Stress Design and Plastic Design", June 1, 1989.
      b. "Code of Standard Practice for Steel Buildings and Bridges", March 7, 2000 except as indicated otherwise in Contract Documents.
      c. "Specification for Structural Joints Using ASTM A 325 or A 490 Bolts", approved by Research Council on Structural Connections, June 23, 2000, and endorsed by AISC.
   2. AISC "Manual of Steel Construction Volume II Connections - ASD 9th Edition/LRFD 1st Edition", 1993.
   3. AISC "Hollow Structural Sections Connection Manual", 1st Edition, 1997.
   4. AISC "Engineering for Steel Construction", 1984, except where superseded by provisions of the AISC "Specification for Structural Steel Buildings", RCSC "Specification for Structural Joints Using ASTM A 325 or A 490 Bolts" and AWS "Structural Welding Code".
   5. AISC "Detailing for Steel Construction", 2002.

B. Other References
   1. ANSI/AWS "Structural Welding Code", D1.1.
   2. SSPC "Steel Structures Painting Manual", Volume 2, Third Edition.
   3. Crane Manufacturer's Association of America Inc. (CMAA), Specification #70, revised 1994.

1.3 SYSTEM DESCRIPTION

A. Design Requirements
   1. Design connections and fabricate work per Reference Standards, except where specifically amended in this Section or superseded by local or State building code requirements.
   2. Provide high strength bolted, slip critical or bearing type connections as shown. Bolt design values for bearing type connections shall assume threads in shear planes. Fully pre-tension bolts in bearing type connections. Do not use bolted and welded connections in combination. Make connections of main members per referenced AISC Standards. Use minimum of two bolts for bolted connections. Where type of connections are not shown or designated:
   3. Future Expansion
      a. In areas noted for future expansion or extension, fabricate steel framing to permit connection of future steel framing. Provide similar holes and connections for future framing as provided for typical steel framing. Provide bolted connections for members removed in the future.

1.4 SUBMITTALS

A. Furnish submittals for items that are identified in this Section by different typeface and a bracketed code (e.g., *Item [L]*). Refer to Section 01340 for definition of codes, types of submittals and administrative requirements governing submittal procedure. Additional submittal requirements about this Section are specified under this Article.

B. Shop drawings shall be submitted with completed shop drawing transmittal sheet attached at end of this Section.

C. *Shop drawings [D]:* Show items to be provided per AISC's Structural Steel Detailing Manual. Shop drawings not checked by Contractor will be returned marked "Not Approved".

D. Submit Structural Steel Shapes and Plates mill test reports to substantiate that steel conforms to specification. Organize and summarize documentation.

E. Show complete details for cutting, fabricating and connecting of pieces, on shop drawings. Provide separate drawings for erection. Indicate marks for pieces on shop and erection drawings. Use marking system compatible with, and referenced to, marking system noted on Contract Drawings.

F. Indicate welding by using AWS symbols, showing type, size and location of welds. Prepare welding procedure specifications and diagrams for each weld joint, and use specified weld in work. Assign each joint procedure designation number or code. Show number or code in tail of each welding symbol on shop drawings. Where standard weld type is repeated throughout work, its procedure designation or code may be shown by general note or reference on each shop drawing where that weld type appears. Provide auxiliary views of welds to clarify welded connections.

G. Differentiate between shop connections and field connections by appropriate symbols on shop drawings. Show location, type and size of connections and connection components. Indicate members or portion of members that shall not be shop painted.
   1. Submit weld design and procedures for welds not pre-qualified by ANSI/AWS D1.1-96.

H. Submit separate setting plans and shop drawings for Anchor Rods. Show, on shop drawings, complete information about bolts, nuts and accessories, identification marking, and setting instructions, including dimensioned locations and elevations. Furnish two copies of Registered Design Professional approved shop drawings, to installer of bolts.

I. *Welder Qualifications [Q]:* Submit summary sheets showing welder, welding operator and tacker qualifications and welding connection workmanship per ANSI/AWS D1.1-96. Do not submit individual certifications. Certifications shall be kept at manufacturer's plant for Inspector's use.

J. *Method of Repair [D]:* Submit drawings and description for proposed repair of defective material or improper workmanship as an alternate to removal and replacement. Include method of repair.

K. TESTING AGENCY SUBMITTALS

L. *Tests and Audits [T]:* Submit reports on completed tests and audits showing conformance or non-conformance with Contract Documents. Include visual and non-destructive testing of welds. Testing Agency shall send duplicate copies of tests and audits to Registered Design Professional and to Contractor.

M. Record Documents
   1. *As-Built Drawings [D]:* Upon completion of erection of steel, and before Final Payment, furnish two certified rolls of 35 MM microfilm (unpunched, negative) of as-built structural steel shop, erection, and anchor bolt setting drawings to Registered Design Professional. Drawings used for microfilming shall be void of marks and stamps and shall show as-built conditions.
   2. Refer to Section 01720 for additional requirements.

1.5 QUALITY ASSURANCE

A. Defective Material or Improper Workmanship
   1. Defective material or improper workmanship found at mill, shop, or project site, at any time, will be rejected regardless of previous inspections.
      a. Remove rejected material or work and provide new materials or work that conforms to Contract Documents.
      b. Alternatively, rejected material or work may be repaired. Submit written request as specified under Article “Submittals”, but do not proceed until Registered Design Professional has approved repair and method. If submittal is not approved by Registered Design Professional, remove and rejected material or work and provide new materials.
   2. Provide removal and replacement, or repair, at no additional cost to Owner, and pay costs attributable to delay caused by rejection and corrective action.

B. Welder, Welding Operator And Tack Welder Qualifications
   1. Employ on this project only welders, welding operators and tack welders who have been tested and qualified per Section 4, ANSI/AWS-D1.1-96 and other applicable provisions of ANSI/AWS-D1.1-96.
   2. Requalify welder, welding operator, or tack welder who has not been performing this particular welding process (for which he was qualified) for six months before employment on this project.
   3. Registered Design Professional reserves may require retesting and requalifying of welder, welding operator, or tack welder.

C. Testing Agency
   1. Owner will engage and pay for services of qualified, unbiased, commercial Testing Agency to do shop inspections. Owner intends that inspection will be full-time and at each location of fabrication.
   2. Testing Agency duties shall include preliminary audit of fabrication shop and equipment to evaluate production and scheduling capabilities of Contractor to comply with intent of

Contract Documents, spot audits of work during fabrication, final audit of work before shipment to site, and determination that materials have been furnished and fabricated per Contract Documents requirements . Acceptance of material and work by Testing Agency shall not relieve Contractor from fulfilling requirements of Contract.

3. Welds shall be visually inspected by Testing Agency. Acceptance of welds shall be based on Section 5 and 6 of ANSI/AWS D1.1-96 and other parts of AWS D1.1 as specified. Inspector shall identify accepted welds with distinguishing mark.
4. Besides visual inspection, non-destructive testing of welds shall be done by Testing Agency per Section 6 of ANSI/AWS-D1.1-96 for compliance with Contract Documents and ANSI/AWS-D1.1-96. Personnel performing non-destructive testing shall be qualified as Level II per American Society for Non-Destructive Testing. Test 10 percent of non-fillet welds. Test additional welds or re-test repaired welds selected by Registered Design Professional. Depending upon kind of rejected welds encountered during Testing, use one or more of the following methods:
    a. Liquid Penetrant Testing per ASTM E 165 for detecting discontinuities that are open to surface inspection. Standards of acceptance shall be in accordance with Section 6 Part C, of AWS D1.1, whichever is applicable.
    b. Magnetic Particle Testing per ASTM E 709, using an external source for magnetization method, for detecting cracks and other discontinuities at or near surface. Standards of acceptance shall be in accordance with Section 6 Part C, of AWS D1.1, whichever is applicable.
    c. Radiographic Testing per Part E of Section 6 of ANSI/AWS D1.1-96 for detecting porosity and other discontinuities by X-ray or gamma-ray testing. Acceptance per applicable parts of Article 6.12 OF ANSI/AWS D1.1-96.
    d. Ultrasonic Testing per Part F of Section 6 of ANSI/AWS D1.1-96 for detecting lamellar discontinuities by pulse echo type using oscillating transducers. Acceptance per Article 6.13 of ANSI/AWS D1.1-96.
5. To assist Testing Agency, provide the following, at no extra cost:
    a. Labor and handling equipment to manipulate members and to provide ready and convenient access for testing and audit work.
    b. One copy each of mill orders, mill test certificates, paint invoices and accepted shop drawings.
    c. Office space for Testing Agency’s administrative duties and free and ready access to fabricating shop.

D. Project Meeting for Structural Steel Detailing
1. At least 7 days before beginning shop drawings, hold meeting in Registered Design Professional’s office to discuss detailing procedures.
2. Invite representatives concerned with structural steel detailing. Attendees shall include, but not be limited to, the following:
    a. Contractor’s superintendent
    b. Structural steel fabricator
    c. Structural steel detailer
    d. Registered Design Professional
    e. Owner

3. Registered Design Professional shall distribute an agenda in advance, chair meetings, and provide minutes of meeting to attendees and Owner.

E. Steel Fabricator shall be certified in Category I per AISC "Qualification Certification Program".

F. At least 14 days before meeting submit proposed connections, procedures, calculations, and alternatives to Registered Design Professional for review.

1.6 DELIVERY, STORAGE AND HANDLING

A. Block and tie material securely during transportation to prevent damage.

B. Ship small, loose items required for field connections in separate, substantial containers to prevent loss and damage during shipping. Items include clips, ties, lugs, separators, bolts, connectors, shims, and miscellaneous pieces. Identify items for location and use.
   1. Ship Anchor Rods and other bolts and connectors to be embedded in concrete or set in masonry per concrete and masonry construction schedules.
   2. Ship bolts and connectors with each shipment of steel members as needed for erection.

C. Store steel members at site in locations agreed upon with Registered Design Professional.

D. Store on shores or blocking to keep steel free from dirt, mud and other foreign materials.

E. Clean steel to remove contaminants, before erection.

F. Replace warped or bent members that cannot be properly and satisfactorily straightened by approved procedures, with new members at no extra cost to Owner.

G. Properly store and transport galvanized steel per American Galvanizers Association's recommended procedures to prevent wet storage stain.

1.7 PROJECT CONDITIONS

A. Existing Conditions
   1. Verify location and elevation of steel bearing or setting locations and Anchor Rods before proceeding with erection and in time to permit necessary corrections without delaying erection of steel. Immediately report to Registered Design Professional discrepancies found; otherwise, pay entire cost of removing and resetting incorrectly placed Anchor Rods and cost of repairing or replacing construction damaged during relocation of incorrectly placed Anchor Rods and plates. Alternatively, where approved by Registered Design Professional, pay cost of changes in steel work required to fit incorrectly placed Anchor Rods. If repair or replacing of concrete construction is permitted, perform work by methods acceptable to Registered Design Professional.
   2. Verify existing conditions including existing column spacing, heights, and interference of new and existing work. Check given dimensions, and make measurements necessary to fit new Work or alterations to existing structure. Check sections and connections of existing

structure with respect to new Work or alterations. If actual conditions deviate from those shown, immediately advise Owner's Resident Construction Engineer. Submit necessary changes for approval before proceeding with steel fabrication.

3. Where existing columns are out of plumb, make necessary provisions in new Work to take care of actual conditions. Use connections with slotted holes, shims, or fills, seated connections, or other suitable means approved by Registered Design Professional to accommodate deviations between assumed and actual conditions. Provide welded connections at slotted hole connections after structural steel is erected and plumbed. Shop weld fills in place. Provide bolts or welds to account for maximum eccentricity of connections. Submit details to provide adjustment to Registered Design Professional for approval before preparation of shop drawings.

B. Protection

1. Assume full responsibility for correct plumbing, alignment, and setting of structural steel members. Provide temporary guys, braces, falsework, connections, etc., necessary to maintain structural framing plumb and in proper alignment until time as permanent connections are made, succeeding work is in place, and temporary work is no longer necessary. In addition, provide temporary bracing, shoring and other work to prevent damage to adjacent work or construction attributable to erection procedures and operation of erection equipment. At completion, remove and dispose of temporary work and facilities, off-site.

PART 2 PRODUCTS

2.1 MATERIALS

A. Structural Steel Shapes and Plates: Submit mill test reports to substantiate that steel conforms to specification.

1. Wide flanges and structural tees, provide per ASTM A 992, rolled from new steel billets, unless otherwise noted on the Drawings
2. All other shapes and plates, provide per ASTM A 36, rolled from new steel billets, unless otherwise noted on the Drawings.

B. Bolts and Accessories: Submit test reports and certificates. Furnish bolts and nuts as assemblies manufactured by one source.

1. High-Strength Bolts: Heavy hex structural per ASTM A 325, of lengths required for thickness of members joined and for the type of connection.
   a. Type 1 or 2, plain bolt.
   b. Bolts for Slip Joints and Vertically Slotted Connections: Unthreaded length of bolt shall exceed the grip of the joint plus washers by 1/16 inch.
   c. Manufacturers: Any manufacturer fabricating bolts and matching nuts per ASTM A 325 and with proper identification on bolt.
   d. Direct Tension Indicator Bolt Manufacturers: Fabricated per ASTM A 325 and with proper identification on bolt:
      1) LeJeune Bolt Company

2) Lohr Structural Fasteners Inc.
3) NSS Industries

2. Nuts for High-Strength Bolts: Heavy hexagon per ASTM A 563.
   a. For type 1 or 2 plain bolt - Grade C, plain nut.
   b. For slip joint bolting - Standard nut plus jam nut or locking nut.
3. Washers for High-Strength Bolts: Hardened steel per ASTM F 436.
   a. For type 1 or 2 plain bolt - Finished washer, plain.
4. Anchor Rods: ASTM F 1554, Grade 55, with weldability supplement S1, threaded and nutted at top and bottom with ASTM F 436, Type 1, hardened carbon steel washers.
5. Nuts for Anchor Rods: Per ASTM A 563, Grade A, heavy hexagonal carbon steel nuts.
6. Common Bolts: Unfinished bolts per ASTM A 307, Grade A, with hexagon heads. Furnish of lengths required to suit thickness of materials joined, but to project not more than ¼ inch beyond nut.
7. Nuts for Common Bolts: Grade A, hexagon, per ASTM A 563.

C. Structural Steel Primer Paint: A white, flat finish, lead and chromate free, rust inhibitive alkyd primer meeting or exceeding the performance requirements of SSPC-Paint 25.
   1. Tnemec “99W White”
   2. Sherwin Williams “Universal Metal Primer B50WW8”
   3. PPG/Pittsburgh Paints “2.8 VOC Alkyd Primer UC87019”
   4. International Coatings, Inc. “Interlac 260FD”

D. *Mono-Rail Bumpers and Mounting Brackets [P]*: Furnish and install per Drawings and manufacturer’s recommended procedures. Submit manufacturer’s information specific to this project. Bumpers and mounting brackets shall be sufficient to resist bumper lateral loads from cranes of capacity equal to that indicated on the Drawings.
   1. Gantrex Crane Runway Products.

2.2 COMPONENTS

A. Steel Structural Tubing: Hollow structural square or rectangular shapes, cold-formed per ASTM A 500 Grade B except where higher strength is noted or specified on Drawings.

B. Steel Pipe: Hollow structural round shapes per ASTM A 53, Type S, Grade B or cold-formed per ASTM A 500, Grade B except where higher strength is noted or shown on Drawings.

C. Columns:
   1. Furnish columns in single lengths, without splices, except where multiple lengths are shown. Fabricate columns straight and true for full length per referenced AISC Specifications.
   2. Fabricate columns with base and cap plates. Cut and finish column ends square at base plates, cap plates, and splices. Provide slotted holes for connections at top of wind columns to permit deflection of framing member above.
   3. Fabricate base and cap plates from rolled steel plates. Press, flatten, or mill plates to obtain proper bearing per AISC requirements. Weld plates to columns at both web and

flanges of column. Provide anchor bolt holes and grout holes in plates, oversized per AISC recommendations, to permit slight adjustment in column location.

D. Girders, Beams and Purlins
   1. Fabricate with natural camber up. Natural camber shall not exceed 1/8-inch for every 10 feet of span.
   2. Provide double angle connections for beams and girders to develop not less than:
      a. 50 percent of total allowable uniform load for non-composite members.
      b. 75 percent of total allowable uniform load for composite members.
      c. Loads shown on Drawings.
   3. Connections need not exceed 100 percent of allowable web shear of member.

E. Door and Other Frames
   1. Assemble and fabricate from structural shapes specially selected for straightness, trueness and freedom from warp, twist and defects. Fabricate frames in true rectangular shape to dimensions noted and per AISC Code of Standard Practice - Section 10. Cope and weld joints. Grind exposed welds smooth and flush with adjacent surfaces.
   2. Install bar stops on pedestrian door frames by plug welding. Where noted to be removable, install bar stops with flat head screws, countersunk flush and spaced not more than 24-inches on center.
   3. Provide concealed clip angles and two expansion bolts for connecting bottom of frames to concrete slabs and foundations. Provide concealed steel strap anchors, not less than 1/8-inch thick, 1-1/2 inch wide, and 10-inches long for securing frame verticals to adjacent masonry or cast-in-place concrete. Weld strap anchors to frame to coincide with horizontal jointing at masonry and space not more than 24-inches on center.

F. Miscellaneous Framing
   1. Provide bracing, wall framing, parapet framing, opening framing and other miscellaneous framing shown and noted to be structural steel, with either holes or other connection work or both.
   2. Verify framing, supports, and openings for roof mounted mechanical and electrical equipment with approved certified manufacturer equipment drawings for correct dimensions, sizes, and locations.
   3. Fabricate bracing so as to provide draw for alignment of framing. Fabricate connections at both ends of bracing members to develop not less than 100 percent of full strength of member.

G. *Mono-Rails [P]:*
   1. Steel sections of sizes shown, selected for trueness of web and flange, prepared for tight joints and complete with removable end stops, bolts, splices, clamps, plates, shims, and fillers, as detailed or required for complete installation.
   2. Protective Coating:
      a. Carboline Company “Carbomastic 15 Low Odor”.

2.3 ACCESSORIES

A. Welded Studs: Per Section 7 of ANSI/AWS D1.1-96 for “Stud Welding”; of length and shank diameter noted.
   1. Shear Studs: Shear connector type.
   2. Headed Studs: Headed studs for concrete anchorage.
   3. Threaded Studs: Threaded studs complete with nut and washer.
   4. Manufacturers:
      a. Champion Fasteners
      b. 1SC “Inventory Sales Company”
      c. TRW “Nelson Division”
      d. TFP Corporation “Tru-Weld Type CA”.

2.4 FABRICATION

A. Furnish and fabricate per the design and details shown and per approved shop drawings.
   1. Fabricate shop connections for welding or high-strength bolting.
   2. Fabricate field connections for high-strength bolting.
   3. Fabricate field connections that cannot be bolted for welding.

B. Provide holes for bolted connections during shop fabrication. Do not burn or torch-cut holes. Drill, do not punch, holes in material 7/8-inch thick or greater.

C. Provide holes, 1/16 inch-diameter larger than bolt diameters for connection of wood nailers. Locate and space holes as noted; otherwise space holes 24-inches on center.

D. Fabricate items built or anchored into adjacent concrete or masonry construction with anchorage devices, bolts, anchors and clips.

E. Provide clips, ties, lugs, separators, bolts, fittings, shims, fillers, connectors, weld electrodes, and miscellaneous items required for fabrication and erection of field-connected materials.

F. Furnish members of proper length and assemble without excessive use of fillers. Join and assemble members without sharp projections, serrated edges, sharp edges, or sharp corners at joints. Cope, block, miter, and grind edges with care. Furnish members free from twists, bends, distortions and open joints. Mark pieces with same identifying number or symbol as used to identify pieces on shop drawings.

G. Welding
   1. Perform welding with specified electrodes and qualified welders, welding operators, and tack welders per specified Reference Standards. Provide necessary jigs and holding devices for shop welding. Dog or clamp down work to prevent distortion during welding. Control welding sequence to minimize residual stresses and member distortion.
   2. Where possible design weld details and procedures to permit welding in flat and horizontal position using ANSI/AWS prequalified welds. Avoid undercut, insufficient throat or leg, lack of fusion, and weld spatter. Repair defective welds immediately or remove and install

new welds conforming with Specifications, at no extra cost to Owner. Qualify non-prequalified welds per ANSI/AWS D1.1-96.

3. Place “SMAW” fillet welds larger than 5/16-inch in not less than two passes. Remove slag coating before starting succeeding pass. Weld lengths shall be net effective lengths. Add approximately ¾-inch to theoretical length of intermittent welds to allow for craters. Fill craters.
4. Conform to minimum thickness, preheat, and interpass requirements. Minimum weld size shall be based on material thickness and shall not be reduced by preheating.
5. For welds exposed to weather, make continuous welds so as to be weather tight and grind smooth.
6. Welding Electrodes:
   a. Shielded Metal Arc Welding: E70 series electrodes per ANSI/AWS A5.1 or A5.5.
   b. Submerged Arc Welding: Flux and F7 series electrodes per ANSI/AWS A5.17 or A5.23.
   c. Gas Metal Arc Welding: Solid ER07 series electrodes per ANSI/AWS A5.18.
   d. Flux Cored Arc Welding: E7 series electrodes per ANSI/AWS A5.20.
7. Install welded studs under conditions conducive to formation of sound welds. Do not weld when steel is less than 20 degrees Fahrenheit or when steel surface is wet or exposed to rain or snow. Preheat steel surfaces, where necessary, to 100 degrees Fahrenheit minimum.

H. Welded Studs
1. Surfaces to receive welded studs shall be free from dirt, loose rust, oil, excessive mill scale, paint, and materials or contaminants that would cause defective weld. Use wire brushing, sand blasting, grinding or other suitable cleaning methods.
2. Shear Studs: Furnish and install shear studs on steel members, of sizes and in locations shown. Install shear studs per Section 7 of ANSI/AWS D1-1-96 using an electric stud welding system and equipment recommended by stud manufacturer, modified as follows:
   a. To provide minimum 2000 amperes power for welding.
   b. To permit only one stud gun to operate at one time from power source.
   c. To allow power source to regain full power between welds.
   d. To time each welding cycle automatically.
3. Headed Studs: Furnish and install headed studs on steel members for anchorage to concrete. Unless otherwise noted, space headed studs at not more than 12-inches on center.
4. Threaded Studs:
   a. Furnish and install threaded studs on steel members in locations shown. Unless otherwise noted, space threaded studs at not more than 24-inches on center.

2.5 FINISHES

A. Surfaces not to be shop painted include:
1. Contact surfaces at slip critical connections.
2. Surfaces to receive adhered application of fireproofing.
3. Surfaces at field welds and field-welded studs to 2-inches beyond weld areas.
4. Top flanges of beams that shall receive welded studs for composite construction.
5. Crane rails.
6. Steel members to be galvanized.

7. Steel surfaces in contact with concrete or steel members embedded in concrete.

B. Surfaces to be shop painted include:
   1. All surfaces except as defined under “Surfaces not to be shop painted”.
   2. Surfaces inaccessible after shop assembly.
   3. Surfaces at bearing-type connections.

C. Surfaces to be painted after connections are made include:
   1. Surfaces at slip critical connections.
   2. Surfaces at welded connections.

D. Preparation, Cleaning
   1. Except as otherwise specified in later paragraphs, clean steel to be shop-painted by power tool cleaning per SSPC-SP3 or brush-off blast cleaning per SSPC-SP7. Standard for surface preparation to be achieved by cleaning shall be B, C, D St 3, or B, C, D Sa 1, per SSPC-Vis1-67T.
   2. For field-contact surfaces, clean surfaces per Paragraph 1 above.
   3. Clean remaining steel per SSPC-SP3 or SSPC-SP7.
   4. Definition of cleaning and its visual aspects are as follows:

	Specification and Subject	Photo SSPS-Vis 1	Purpose
SSPC-SP3	Power Tool Cleaning	B,C,D St 3	Removal of loose rust, loose mill scale, and loose paint to degree specified, by power tool chipping, descaling sanding, wire brushing and grinding.
SSPC-SP7	Brush-Off Blast Cleaning	B,C,D Sa 1	Removal of loose rust, loose mill scale, and loose paint to degree specified by brush-off blast cleaning. Tightly adhered mill scale, rust and paint may remain on surface.

E. Shop Priming
   1. Apply one coat of priming paint, unless otherwise specified or noted on Drawings.
   2. Surfaces to be shop painted include:
      a. All surfaces except as defined under “Surfaces not to be shop painted”.
      b. Surfaces inaccessible after shop assembly.
      c. Surfaces at bearing-type connections.
   3. Surfaces to be painted after connections are made include:
      a. Surfaces at slip critical connections.
      b. Surfaces at welded connections.
   4. Surfaces not to be shop painted include:
      a. Contact surfaces at slip critical connections.
      b. Surfaces at field welds and field-welded studs to 2 inches beyond such weld areas.
      c. Top flanges of beams that will receive welded studs for composite construction.
      d. Crane rails.
      e. Steel members to be galvanized.

f. Steel surfaces in contact with concrete or steel members embedded in concrete.

5. Apply paint to clean, dry surfaces by brush, spray, or roller. Do not use dipping process.
6. Apply paint coating evenly and uniformly, without skips or runs, to produce dry paint film thickness of not less than 2.0 mils.
7. Allow paint to dry before handling or loading steel work for shipment. Apply erection marks on members after painting in same location and of same design as shown on approved erection drawings.

F. Galvanizing

1. Galvanize members exposed to weather when in final location, unless otherwise noted, and members specifically noted on Drawings as galvanized.
   a. Galvanized rolled, pressed and forged steel shapes, plates, bars and strips per ASTM A 123 with an average weight of zinc coating of 2.0 ounces per square foot of actual surface for members less than ¼-inch thick, and 2.3 ounces per square foot of actual surface for members ¼-inch and thicker.
   b. Galvanized iron and steel hardware per ASTM A 153 with minimum weight of zinc coating, in ounces per square foot of surface per TABLE 1 of ASTM A 153, for various classes of materials used on project.
2. Apply galvanizing after built-up members are completely fabricated. Straighten shapes and assemblies true to line and plane after galvanizing. Repair damage to galvanized surfaces with galvanized touch-up paint.
3. Remove excess zinc from bolt holes and shop fit specified bolts in holes.
4. Follow proper detailing and fabrication procedures per ASTM A 143, A 384 and A 385 to provide optimum hot dip galvanizing.

PART 3 EXECUTION

3.1 ERECTION

A. Erect and install members accurately to lines and elevations shown. Unless otherwise noted, erect vertical members plumb, horizontal members level, and intersections of members at right angles. Make connections after members have been plumbed, leveled, and aligned properly.

1. Erect girts in unbroken level lines, with ¾-inch to 1 inch open space between ends of aligned members where members are protected from weather and without open space where exposed to weather. Install sag rods in locations noted. Thread ends of sag rods, draw girts up level with nuts, and install lock nuts.

B. Connect members temporarily with sufficient bolts to insure safety of structure until permanent connections are made. Use bolts of same size and type as used for permanent connections. Remove temporary bolts as permanent connections are made and install permanent bolts of type specified.

C. Tension bracing while aligning framing. Clamp horizontal bracing to beams at intersections. Where shown, join bracing intersections with splice plates.

D. Members that do not fit together during erection because of errors in shop fabrication shall be reported to Registered Design Professional. Correct minor misfits as part of field erection. Only light drifting shall be permitted to draw members together. Drifting to match unfair holes shall not be permitted. Reaming to match unfair holes shall be permitted provided that quantity of reaming does not exceed 1/16-inch and that reaming to be done does not decrease critical edge distance beyond amount considered minimum by referenced AISC Specification. Where necessary to enlarge holes, criteria specified for holes made in shop shall apply to holes made in field, and proper size bolt shall be used. Where misfitting members cannot be corrected as specified above, provide new members. Correct misfit members, including replacement, at no additional cost to Owner and without altering Contract Schedule and Completion Date.

E. Do not cut or alter any members in the field without prior written consent from Registered Design Professional. Use hacksaw to cut members in the field. Do not burn or flame cut members in the field without prior written consent of Registered Design Professional. If consent is given, burned members shall be free from serrations and gouges at radius burns and at re-entrant corners. Occasional serrations not exceeding 1/16 -inch in depth shall be permitted along straight cuts. Grind burned edges to remove sharp edges and corners. Burning of holes shall not be permitted.

F. Place grout under steel column bases and elsewhere as shown. Mix and place grout per manufacturers directions. Place grout to fill voids and to make full contact with underside of bearing surfaces. Place grout as soon as possible and before installation of enclosure systems.

G. Apply protective coating to structural members including base plates and anchor rods that occur in fill areas below floor slabs where members are not encased in concrete. Clean surfaces and apply coating per manufacturer's recommendations to minimum one-coat dry film thickness of 5 mils.

3.2 CONNECTIONS

A. Welding
   1. Complete field welding per requirements specified for shop welding.
   2. Use low hydrogen weld rod for welding to existing steel framing unless steel is shown to be compatible with proposed weld rod.

B. High Strength Bolting
   1. Install high strength steel bolts per referenced "Specification for Structural Joints Using ASTM A 325 or A 490 Bolts". Tension each bolt by "turn-of-nut tightening" method or "alternate design bolt" method to a total not less than that stated in referenced "Specifications for Structural Joints using ASTM A 325 or A 490 Bolts" for type and size of bolt used.
   2. Install bolt in properly sized hole and place washer under turned element. Tension bolt assembly as specified until required tension is obtained. Do not loosen and reuse bolt assembly after it has been tensioned.

3. Before bolting members, clean faying surfaces of defects, coatings, and contaminants that would prevent solid seating of parts or that would interfere with development of friction between parts for slip-critical connections.

C. Common Bolting
1. Where bolts shall be exposed in finished work, install bolts so that nut end shall not be exposed to view. Draw connections up tight using impact wrenches. Use lock washers for common bolting.

D. Monorail Beams
1. Install monorail beams plumb, and level to tolerance of 1/8-inch in 50 feet.
2. Weld bottom flanges of abutting monorail beams and grind smooth and flush.
3. Retighten bolts 30 days after initial installation.

3.3 ALTERATIONS TO EXISTING STEEL

A. Provide alterations to existing structural steel, removal of steel, reinstallation of existing members, and installation of new steel as shown.

B. Before cutting or removing any steel, brace and support existing structure if appropriate to temporarily absorb loads which may be imposed by alteration work. Remove steel by saw cutting and cold chiseling; burning is not permitted without written consent of Registered Design Professional. Drill and ream new bolt holes if appropriate for new connections.

C. Accurately fabricate new steel members to conform to existing conditions and connect as specified.

D. Existing steel to be removed and not required in alteration work shall become property of Contractor and shall be removed from site.

E. Field measure existing construction if appropriate for proper fabrication of work and accurate fit of steel members. Dimensions noted on Drawings shall be field verified.

F. Bolt, or weld if approved by Owner, to existing steel. Use low-hydrogen electrode for welding.

3.4 REPAIR/RESTORATION

A. Degrease, clean and field paint portions of bolts, washers, faying surfaces, adjacent surfaces that remain exposed after assembly, unpainted splice plates, cover plates, welded areas and paint surfaces damaged during shipment and erection. Paint with one coat of same type prime paint used in shop.

B. After erection of steel, shop coat of paint on exposed framing shall be suitable to receive General Painter’s field coats. Where surfaces are damaged during erection or where necessary for General Painter to scrape off shop coat and repaint same, or to remove clay, mud and other foreign materials, cost of this work shall be borne by Contractor.

C. It is the intent that shop coat of paint serve as finish coat for steel members, with no additional coats being applied to members (except that columns and door frames shall receive an additional finish coat applied by General Contractor.) After erection, examine shop coat and touch-up paint damaged and bare areas (including welds and fasteners). If surfaces are not adequately covered, as determined by Resident Construction Engineer, apply further coats to achieve complete coverage of surfaces at no additional cost to Owner. Completed surfaces shall be clean, free of dirt, mud and other foreign matter; if surfaces are soiled, clean and repaint same as directed.

D. After erection of steel, clean galvanized surfaces to be free from clay, mud, and other foreign matter. Apply zinc rich touch-up paint per ASTM A 780 to surfaces damaged during shipment and erection.

3.5 FIELD QUALITY CONTROL

A. The Owner will provide for field inspection of work, at his expense. Requirements shall be similar to those specified for shop inspection. Besides testing of welds, high strength bolted connections shall be tested and checked by Testing Agency using calibrated torque wrench per referenced "Specification for Structural Joints Using ASTM A 325 or A 490 Bolts". If one or more bolts in any connection are found to be below minimum tension, bolts in that connection shall be checked. Retorque bolts found to be below minimum tension. Bolts shall be rechecked for conformance to Specification.

B. Framing shall be inspected for plumb of vertical members, level or slope of horizontal members, alignment and plane of vertical and horizontal members, angle of intersection of members, defective members, efficiency of common bolt connections, primer coating, touch-up painting, and to ascertain that materials are furnished and erected in accordance with requirements of Contract Documents.

END OF SECTION

Revision History	
Date	**Rev. No.**
A	0
B	0
C	0
D	0
E	0
F	0
02-19-09	0

SM/djo[ST,AR]
P:__PROJECTS_SF07\SF070003.0001NSLS II CCWF EXPANSION\SPC\05120.DOC

Giffels, LLC / IBI Group

SHOP DRAWING TRANSMITTAL SHEET

SUBMITTAL DATE: _____ NEW •

SUBMITTAL NO.: _____ RESUB •

SPEC SECTION: _____

PROJECT/CONTRACT: _____

FROM: _____

	DRAWING NUMBER	DRAWING DESCRIPTION	ACTION CODE
1.			
2.			
3.			
4.			
5.			
6.			
7.			
8.			
9.			
10.			
11.			
12.			
13.			
14.			
15.			
16.			
17.			
18.			
19.			
20.			
21.			
22.			
23.			
24.			
25.			
26.			
27.			
28.			
29.			
30.			

THIS PAGE INTENTIONALLY LEFT BLANK

SECTION 05310

METAL ROOF DECK

PART 1 GENERAL

1.1 SUMMARY

A. Section Includes
   1. Metal roof deck and accessories as shown or specified.

B. Related Sections
   1. Metal floor deck - Section 05315.
   2. Field painting of metal deck - Division 9.
   3. Roof drains - Division 15.

1.2 SUBMITTALS

A. Furnish submittals for items that are identified in this Section by a different typeface and a bracketed code (e.g., *Item [L]*). Refer to Section 01340 for definition of codes for types of submittals and the administrative requirements governing submittal procedure. Additional submittal requirements pertaining to this Section are specified under this Article.

B. *Detailed Shop Drawings [D]:* Submit to show deck sheet layout with openings, cut outs, closures, cants, roof drain pans, ridge and valley plates, saddles and reinforcing, finish or paint. Submit details of roof drain pans.
   1. Manufacturer's Product Data: Submit for deck unit profile, gage, section properties, and allowable diaphragm shear for specific deck and fastening method proposed. Include certification of minimum thickness of each sheet used.

1.3 DELIVERY, STORAGE AND HANDLING

A. Properly store, handle and erect material. Replace or repair damaged material before erection, at no additional cost to Owner.

B. Properly store and transport galvanized steel per American Galvanizers Association's recommended procedures to prevent wet storage stain.

1.4 PROJECT CONDITIONS

A. Do not use placed units as storage or working surface until after units have been permanently fastened in position. Do not damage or overload roof deck during construction period.

PART 2 PRODUCTS

2.1 MATERIALS

A. Wherever specific gage of steel sheet is specified in this Section, followed by minimum thickness in inches, minimum inch thickness shall govern based on bare, uncoated sheet. There shall be no tolerance under specified minimum inch thickness. Use the following:
   1. Cold-rolled carbon steel sheet, ASTM A 611, Grade C, cleaned, chemically treated and painted with manufacturer's standard gray rust-inhibitive primer of minimum 0.5 mil dry film thickness, each side.
   2. Galvanized steel sheet, ASTM A 446, Grade A, hot-dipped galvanized to coating designation G-90, minimized spangle, chemical treatment per ASTM A 525.

B. Steel angles shall be hot rolled carbon steel ASTM A 36.
   1. Hot-dipped galvanized with minimum zinc coating of 2 ounces per square foot per ASTM A 123.

C. Vapor-Proof Deck Materials:
   1. Joint Sealing Material: Non-skinning, gun-grade, bulk compound conforming to requirements of National Association of Architectural Metal Manufacturer's Association Specification.
   2. Flexible Closure Strips: Elastomeric, vulcanized, closed cell neoprene or EPDM rubber, to fit deck profile and be under compression. Submit 12 inch long sample.

D. Fasteners: For securement of metal roof decks:
   1. Powder-actuated, drive pin type adequate to penetrate into steel members. Fasteners and low-velocity powder-actuated tools by:
      a. Hilti Fastening Systems, Inc.
      b. Ramset Fastening System.
   2. Self-drilling, self-tapping, 12-24 support fasteners with hex washer head.
      a. ITW Buildex.
   3. Stitch, 10-16 side fasteners with hex washer head and pilot point:
      a. ITW Buildex.
   4. Air-actuated, adequate to penetrate into steel members. Fasteners and low-velocity air-activated tools by:
      a. Pneutek, Inc.
      b. Hilti, Inc.

2.2 MANUFACTURED UNITS

A. Provide roof deck units to span at least three spans. Where not practical, provide units to span two spans, but only where so approved on shop drawings. Fabricate deck and accessories per AISI "Specifications for Design of Cold-Formed Steel Structural Members" and SDI "Standard No. 1 - Basic Design Specifications" except where other requirements are specified.
   1. 1-1/2 Inch Deep Deck.: Fabricate of 18 gage (design thickness is .0478 inch) specified steel sheet. Provide wide rib deck conforming to Steel Deck Institute type WR.
      a. Bowman Metal Deck, Cyclops Corporation "B".

b. Consolidated Systems Inc. “B”.
c. Epic Metals Corporation “B”.
d. Roll Form Products, RFP Inc. “B16RD”.
e. United Steel Deck Inc. “B”.
f. Vulcraft, Nucor Corporation “1.5B”.
g. Wheeling Corrugating Company, Wheeling-Pittsburgh Steel Corporation “BW”.

2.3 ACCESSORIES

A. Fabricate ridge and valley plates from 18 gage sheet of same metal and finish as for roof deck units. Fabricate from single width sheets and in sections as long as practical. Fabricate to form transition slopes required, not less than 4.5 inches effective width, with 3 inch flanges for securing to roof deck.

B. Fabricate metal closures from 18 gage sheet of same metal and finish as for roof deck units and of configuration required to provide tight fitting closures at open ends and sides of roof deck units.
   1. Fabricate metal closure on backside of parapets, expansion joints, equipment curbs, and at intersection of roof and walls of same metal and finish as for roof deck units. Fabricate from single width sheets and in sections as long as practical. Provide top and bottom flanges of not less than 3 inches. Gage for span of closure shall be:

Span	Gage
Up to 10 inches	18
10 to 16 inches	16
16 to 24 inches	14
Over 24 inches	as shown on drawings

C. Fabricate roof drain pans from 14 gage sheet of same metal and finish as for roof deck units. Pans shall be approximately 29 inches by 33 inches in overall size, of sloped design to fit roof slope, and formed with depressed, flat bottom 1-1/2 inches below adjacent roof deck surface at low side. Provide flanged edges to fit flat on top of roof deck.

D. Hanger tabs shall not be permitted.

PART 3 EXECUTION

3.1 INSTALLATION

A. Install roof deck to comply with requirements for Class I roof deck installation of Factory Mutual Systems, FM 1-28, based on a 110 mile per hour wind speed. If powder-actuated or air-actuated tools/fasteners are used, comply with State and Federal regulations and with ANSI A10.3. Clean top and bottom surfaces of deck of mud, dirt and other contaminants, before start of installation.

B. Supporting members shall be properly installed and fastened before placing roof deck units. Place roof deck units on supporting steel framework and adjust to final position with ends bearing on supporting members. Lap end joints 2 inches minimum. Align flutes longitudinally before fastening deck permanently. Lap side joints by nesting with adjacent units. Place and align roof deck units to maintain required number of units shown on approved shop drawings, and to prevent stretching or contracting of side-laps.

C. Secure roof deck units to framing by electric arc welding, per AWS D.1.Provide 3/4 inch long fillet welds, 1/2 inch diameter puddle welds, or equivalent, spaced 12-inches maximum on centers at each supporting member. Provide No. 10 self-tapping screws to secure nested rib edges together, at each support and at mid-point between supports, but at not more than 3 feet on center between supports. Do not combine deck welds and overlap rib welds. Use true fusion welds, not burning or sticking type welds.

D. Alternately, at Contractor's option, secure roof deck to framing by specified fasteners, spaced 12-inches maximum on center at each supporting member. Provide No. 12 self-tapping screws to secure nested rib edges together, or use specified fasteners; place at each support and at mid-point between supports but at not more than 3 feet on center between supports.

E. Provide sealed end lap and side lap joints in roof deck installation where vapor-proof area is shown. Side laps shall be field-sealed; seal end laps in field as deck units are installed. In addition, furnish and install flexible closure strips, in flutes of deck underside, at supports, to provide effective sealing-off areas.

F. Set roof drain pans in proper location for roof drains, with bottoms level. Weld pans to roof deck with tack welds at 6 inch centers around perimeter of pan.

G. Provide required holes in roof deck for roof drain pans, passage of pipes, duct and structural supports, equipment and other openings, and similar construction. Provide steel angle framing at two sides of openings where structural capacity of roof deck is impaired by cutting of deck , where building framing is not provided. Use angles 18 inches longer than opening width, placed at right angles to deck ribs, welded to bottom of each rib.

H. Provide metal closure strips at open, uncovered longitudinal edges of roof deck units, and at junction between deck units running in different axis, secured in place. In addition, provide metal closures in voids between metal roof deck units and top of walls and partitions where so shown. Provide metal filler strips under prefabricated curbs supporting roof top units.
   1. Provide metal closures on backside of parapets.

3.2 REPAIR/RESTORATION

A. Wire-brush, clean and touch-up paint scarred areas on top and bottom surfaces of deck to leave deck in condition ready for field painting. Scarred areas include welds, weld scars, abraded surfaces, bruises and rust spots. Use zinc-rich paint on galvanized surfaces and on weld burns.

3.3 FIELD QUALITY CONTROL

A. Examine placed deck for tears, dents or other damage that may compromise structural integrity of decking. Report damage to Registered Design Professional for determination of any required repairs.

B. Examine air-actuated fasteners to insure steel roof deck is properly clamped to support steel. Verify fastener nail head standoff is within manufacturer's accepted tolerance. Replace under-driven and over-driven fasteners with adjacent properly installed fasteners.

3.4 CLEANING

A. Upon completion of roof deck installation, clean top and bottom surfaces of deck free from mud, dirt, weld spatters and other contaminants to leave deck in condition ready for field painting.

END OF SECTION

Revision History	
Date	**Rev. No.**
A	0
B	0
C	0
D	0
E	0
F	0
02-19-09	0

SM/djo[ST,AR]
P:__PROJECTS_SF07\SF070003.0001NSLS II CCWF EXPANSION\SPC\05310.DOC

THIS PAGE INTENTIONALLY LEFT BLANK

SECTION 05315

METAL FLOOR DECK

PART 1 GENERAL

1.1 SUMMARY

A. Section Includes
   1. Metal floor deck and accessories as shown or specified.

B. Related Sections
   1. Welded steel stud shear connectors - Section 05120.
   2. Field painting of metal deck - Division 9.
   3. Core drilling of deck, providing of inserts, taping of abutting end cells, grounding of deck and providing of electrical fittings – Division 16.

1.2 SUBMITTALS

A. Furnish submittals for items that are identified in this Section by a different typeface and a bracketed code (e.g., *Item [L]*). Refer to Section 01340 for definition of codes for types of submittals and administrative requirements governing submittal procedure. Additional submittal requirements pertaining to this Section are specified under this Article.

B. *Detailed Shop Drawings [D]:* Submit to show unit sheet layout with openings, cut outs, closures and reinforcing, finish or paint and shear stud layout.
   1. Manufacturer's Product Data: Submit for deck unit profile, gage, section properties, and allowable diaphragm shear for specific deck and fastening method proposed. Include certification of minimum thickness of each sheet used.

1.3 DELIVERY, STORAGE AND HANDLING

A. Properly store, handle and erect material. Replace damaged material before erection, at no additional cost to Owner.

B. Properly store and transport galvanized steel per American Galvanizers Association's recommended procedures to prevent wet storage stain.

1.4 PROJECT CONDITIONS

A. Do not use placed units as storage or working surface until after units have been permanently fastened in position. Do not damage or overload floor deck during construction period.

PART 2 PRODUCTS

2.1 MATERIALS

A. Wherever specific gage of steel sheet is specified in this Section, followed by minimum thickness in inches, minimum inch thickness shall govern based on bare, uncoated sheet. There shall be no tolerance under specified minimum inch thickness. Use the following:
   1. Galvanized steel sheet, ASTM A 446, Grade A, hot-dipped galvanized to coating designation G-60, minimized spangle, chemical treatment per ASTM A 525.
      a. Shop paint bottom surface with manufacturer's standard gray primer of minimum 0.5 mil dry film thickness.
      b. Acoustic deck, composite deck, and deck receiving fireproofing shall be galvanized.

B. Steel angles shall be hot rolled carbon steel ASTM A 36.
   1. Hot-dipped galvanized with minimum zinc coating of 2 ounces per square foot per ASTM A 123.

C. Fasteners: For securement of metal floor decks:
   1. Powder-actuated, drive pin type adequate to penetrate into steel members. Fasteners and low-velocity powder-actuated tools by:
      a. Hilti Fastening Systems, Inc.
      b. Ramset Fastening System.
   2. Self-drilling, self-tapping, 12-24 support fasteners with hex washer head.
      a. ITW Buildex.
   3. Stitch, 10-16 side fasteners with hex washer head and pilot point:
      a. ITW Buildex.
   4. Air-actuated, adequate to penetrate into steel members. Fasteners and low-velocity air-activated tools by:
      a. Pneutek, Inc.
      b. Hilti, Inc.

2.2 FABRICATION AND MANUFACTURE

A. Provide floor deck units to span at least three span lengths. Where not practical, provide units of length to span two spans, but only where so approved on shop drawings. Fabricate deck and accessories per AISI "Specifications for Design of Cold-Formed Steel Structural Members", except where specific requirements are specified.

B. Floor Deck Units
   1. 1-1/2 Inch Deep Deck. Fabricate of 18 gage (design thickness is .0478 inch) specified steel sheet.
      a. Non-Composite Type decks specified below are referred to by their normal, upright, trade name. Deck shall be installed in inverted position and prime paint shall not be in contact with concrete.
         1) Bowman Metal Deck, Cyclops Corporation "B".
         2) Consolidated Systems Inc. "B".
         3) Epic Metals Corporation "B".

4) Roll Form Products, RFP Inc. “B16RD”.
5) United Steel Deck Inc. “B”.
6) Vulcraft, Nucor Corporation “1.5B”.
7) Wheeling Corrugating Company, Wheeling-Pittsburgh Steel Corporation “BW”.

C. Accessories
1. Metal closures for openings between floor deck and other construction shall be of same metal and finish as floor deck units, 18 gage for end closures and 20 gage for other conditions. Fabricate to profile to provide tight-fitting closures.
2. Tape closures shall be pressure-sensitive tape as standard with floor deck manufacturer, for sealing abutting ends of units.
3. Hanger tabs shall not be permitted.

D. Shear Studs
1. Install per Section 7 of AWS D1.1 for “Stud Welding”; of length and diameter noted.
a. Erico Products, Inc. “Blue Arc Shear Connector Studs”.
b. KSM “Shear Connectors”.
c. Nelson “Fluxed Shear Connector Studs”.
d. Tru-Fit Products Corporation “Tru-Weld Type CA”.

PART 3 EXECUTION

3.1 INSTALLATION

A. Install metal floor deck in accordance with manufacturer’s published instructions and this Section.

B. Supporting members shall be properly installed and fastened before placing floor deck units. Adjust to final position with ends bearing on supporting members, ends of adjacent units staggered, and accurately aligned end to end, before fastening permanently. Lap end joints 2 inches minimum over support. Lap side joints by nesting with adjacent units. Place and align floor deck units to maintain required number of units shown on approved shop drawings, and to prevent stretching or contracting of side-laps. Butt end joints.

C. Wire-brush tops of structural members to remove rust and scale, before placing deck, to prevent rust and scale from interfering with secure welding of shear connectors.

D. Lay out floor deck units so that bottom of deck bears on supporting steel to receive shear stud connectors. At composite girders, deck flute shall bear and be aligned parallel to girder web or deck shall be discontinued each side of web (but still bearing minimum of 2 inches on girder flange) to allow welding of shear stud connectors.

E. Secure floor deck units to framing by electric arc welding, per AWS D1.1. Provide one inch long fillet welds, 5/8 inch diameter puddle welds, or equivalent, spaced 12-inches maximum on centers at each supporting member. Provide one inch long welds to secure rib edges together at each support, at mid-point between supports, but at not more than 3 feet on center. Do not

combine deck welds and overlap rib welds. Use true fusion welds, not burning or sticking type welds.

F. Alternately, at Contractor's option, secure roof deck to framing by specified fasteners, spaced 12 inches maximum on center at each supporting member. Provide No. 12 self-tapping screws to secure nested rib edges together, or use specified fasteners; plate at each support and at mid-point between supports but at not more than 3 feet on center between supports.

G. Apply pressure-sensitive tape over joints of abutting floor deck units, to prevent flow of mortar through joints.

H. Provide holes in floor deck for passage of pipes, duct and structural supports, equipment and other openings, and similar construction. Furnish and install steel angle framing at two sides of openings where structural capacity of floor deck is impaired by cutting of deck, where building framing is not provided. Use angles 18 inches longer than opening width, placed at right angles to deck ribs, welded to bottom of each rib.

I. Provide metal closures at open, uncovered ends and edges of floor deck, welded in place, to provide rigid installation. In addition, provide metal closures in voids between metal floor deck units and top of walls and partitions where shown on Drawings.

J. Install floor deck to provide an even top surface, ready to receive concrete fill. Trim deck to fit closely to adjacent construction, and force lap joints into tight contact. Installation shall prevent flow of concrete mortar through floor deck joints.

K. SHEAR STUDS: Install per Section 7 of AWS D1.1 for "Stud Welding". Provide and install shear studs on steel members by welding through floor deck, of sizes and in locations shown. Install shear studs using an electric stud welding system, and equipment, recommended by stud manufacturer, modified as follows. Minimum power for welding shall be 2000 amperes. System shall permit only one stud gun to operate at one time from power source, shall allow power source to regain full power between welds, and shall time each welding cycle automatically.

L. Clean surfaces to receive shear studs, free from dirt, loose rust, oil, excessive mill scale, paint and other materials or contaminants that would cause defective welds. Use wire brushing, sand blasting, grinding or other suitable cleaning methods.
   1. Install shear studs under conditions conducive to formation of sound welds. Do not weld to steel shapes when steel is less than 20 degF, nor when steel surface is wet or exposed to rain or snow. Preheat steel surfaces to 100 degF minimum.

3.2 REPAIR / RESTORATION

A. Wire-brush, clean and touch-up-paint scarred areas on top and bottom surfaces of deck to leave deck in good condition ready for later construction. Scarred areas include welds, weld scars, abraded surfaces, bruises and rust spots. Use zinc-rich paint on galvanized surfaces. Use rust-inhibitive prime paint, on painted surfaces, of same kind as used in the shop. At phosphatized finished surfaces, wire-brush and leave ready for concrete placement.

3.3 FIELD QUALITY CONTROL

A. All field quality control requirements shall be completed prior to placement of concrete.

B. Examine placed deck for tears, dents or other damage that may compromise structural integrity of slab system. Report damage to Registered Design Professional for determination of any required repairs.

C. Examine air-actuated fasteners to insure steel floor deck is properly clamped to support steel. Verify fastener nail head standoff is within manufactures accepted tolerance. Replace under-driven and over-driven fasteners with adjacent properly installed fasteners.

D. Shear connector welds shall be inspected and tested according to AWS D1.1. Bend tests shall be performed on all studs where visual inspection reveals less than 360-degree flash around base of stud. Remove and replace all work not in conformance with code provisions.

3.4 CLEANING

A. Upon completion of floor deck installation, clean top and bottom surfaces of deck to be free from mud, dirt, weld spatters and other contaminants to leave deck in good condition ready for later construction.

END OF SECTION

Revision History	
Date	**Rev. No.**
A	0
B	0
C	0
D	0
E	0
F	0
02-19-09	0

SM/djo[ST,AR,EL]
P:__PROJECTS_SF07\SF070003.0001NSLS II CCWF EXPANSION\SPC\05315.DOC

THIS PAGE INTENTIONALLY LEFT BLANK

SECTION 05500

METAL FABRICATIONS

PART 1 GENERAL

1.1 SUMMARY

A. Section Includes
   1. Provide metal fabrications shown or specified.
   2. This section includes the following:
      a. Steel ladders.
      b. Egress stairs.
      c. OSHA industrial stairs.
      d. Loose bearing and leveling plates.
      e. Loose steel lintels.
      f. Steel framing and supports for overhead doors.
      g. Steel framing and supports for mechanical and electrical equipment.
      h. Steel framing for openings in the roof.
      i. Steel framing for wall openings.
      j. Steel framing and supports for applications where framing and supports are not specified in other Sections.
      k. Metal angle and channel edgings.
      l. Floor pit and trench edge angles.
      m. Miscellaneous metal trim.
      n. Rolled shape steel door frames.
      o. Metal floor plate and supports.
      p. Extruded nosings and treads.
      q. Pipe guards.
      r. Wheel guards.
      s. Pipe bollards.
      t. Gratings.
      u. Pipe railings.
      v. Highway type guardrails.

B. Related Work Specified in Other Sections
   1. Cast Iron Trench Drains and Grates – Division 3.
   2. Structural Steel – Division 5.

C. Products Furnished, But Not Installed Under This Section
   1. Metal fabrications, and anchors for same, for embedment in concrete.

D. Related Work Performed Under Other Contracts
   1. Structural Steel - Structural Steel Contract.

1.2 PERFORMANCE REQUIREMENTS

A. Metal Surfaces, General: For metal fabrications exposed to view in the completed Work, provide materials with smooth, flat surfaces without blemishes. Do not use materials with exposed pitting, seam marks, roller marks, rolled trade names, or roughness.

B. Material Isolation: Where aluminum comes in contact with concrete, masonry, or dissimilar metals, the materials shall be kept from direct contact by use of a membrane separator such as tarred building paper or a heavy coat of alkali resistant bituminous paint as approved by the Architect-Engineer, applied as received from the manufacturer. This paint shall be allowed to dry before assembly.

1.3 SUBMITTALS

A. Furnish submittals for items that are identified in this Section by a different typeface and a bracketed code (e.g., *Item [L]*). Refer to Division 1 General Requirements for definition of codes for types of submittals and the administrative requirements governing submittal procedure. Additional submittal requirements pertaining to this Section are specified under this Article.

B. Submit detailed shop drawings when specified, to show compliance with the design intent.

C. Metal Fabrications Materials: Submit Letter of Compliance for materials and products specified.

D. Qualified Welder Certificates: Submit to the Owner's Representative for each welder, from accredited, independent testing laboratory, per AWS D1.1.

1.4 QUALITY ASSURANCE

A. Fabricator Qualifications: A firm having the experience in the type and quantity of metal fabrications to be fabricated and installed and have construction records indicating success in performance capacity, quantity, quality and safety.

B. Welds shall be certified for procedures to be performed in accordance with AWS D1.1 "Structural Welding Code – Steel", AWS D1.3 "Structural Welding Code – Sheet Steel", and AWS D1.2 "Structural Welding Code – Aluminum".

C. Shop Inspection: Grant the Owner's Representative access for inspection purposes to any and all parts of the shop where work under this Section is being fabricated.

D. Grating shall be designed, manufactured and installed in compliance with ANSI/NAAMM MBG 531 "Metal Bar Grating Manual" and MBG 532 "Heavy-Duty Metal Bar Grating Manual".

1.5 PROJECT CONDITIONS

A. Field Measurements: Take measurements at the building to assure proper fitting, fabrication, and erection of the work. Check dimensions in the field, whether or not shown, upon which the accurate fitting together and building-in of the metal fabrication work may depend or which affects the proper installation of the work of others. Indicate field dimensions on the shop drawings.

B. Closely coordinate this work with the work of others, including construction schedule wherever this work affects or is affected by the work of others. Provide all anchors, inserts, supports, and accessories as part of this work.

C. Fabrication from Established Dimensions: Verify with the Owner's Representative whether field dimensions will delay the construction schedule. Upon approval of the Owner's Representative, proceed with fabrication after receipt of approved shop drawings based on established dimensions without field measurement. Continue coordination of established and field dimensions until fabrications are installed. Allow extra material, if required, for field fitting and trimming.

1.6 COORDINATION

A. Coordinate the work of this Section with the work of other trades, under this Contract or other contracts, doing adjacent or concurrent work so as to insure proper, timely, and adequate interface.

B. Provide drawings and deliver templates, anchors, fasteners and embedded items to the site to insure proper, timely and adequate interface.

PART 2 PRODUCTS

2.1 MATERIALS

A. Rolled Steel Plates and Shapes: Conform to ASTM A36 for angles and plates, ASTM A36 or A572 Grade 50 for S and M shapes and channels, and ASTM A992 for W shapes.
   1. Where exposed to view, material and fabrication shall conform to requirements of "Specification for Architecturally Exposed Structural Steel" in Section 10 of AISC Code of Standard Practice.

B. Bolts: High-strength heavy hex structural bolts per ASTM A325, Type 1 or 2, Plain (Galvanized for galvanized members); use heavy hex nuts per ASTM A563, Grade C plain nut (Grade DH for galvanized bolts); and use hardened steel washers per ASTM F436 plain-finished washer (Galvanized washer for galvanized bolts).

C. Steel Pipe: Per ASTM A53, Grade B, Type E or S, Schedule 40 and 80.

D. Steel Grating
   1. Steel Grating
      a. Rectangular bearing bars and crossbars shall conform to ASTM A 569 for hot rolled carbon steel sheet and strip.
      b. Crossbars made of wire rods shall conform to ASTM A510 for carbon steel wire rods.
   2. Acceptable Manufacturers
      a. Alabama Metal industries Corp., Birmingham, AL
      b. All American Grating, Pittsburgh, PA
      c. Barnett/Bates Corp., Joliet, IL
      d. Fisher & Ludlow, Plymouth, MI
      e. IKG Industries, Nashville, TN
      f. Ohio Grating Inc., Canton, OH
      g. Tru-Weld Grating Inc., Wexford, PA
   3. Bar grating shall be fabricated using plain rectangular steel bearing bars spaced at 1-3/16 inches on center with forge welded steel crossbars spaced 4 inches on center. Depth of bearing bars shall be determined by Registered Design Professional based on design load and span.
   4. Notching of bearing or cross bars is prohibited.
   5. Provide banding at cutouts and around perimeter of removable panels. Banding shall be same size as bearing bars.
   6. Limit weight of removable panels.
   7. Grating exposed to elements shall be galvanized.
   8. Mechanical fasteners shall be galvanized when galvanized grating is used.

E. Galvanized Steel Bar Grating Fasteners: Use galvanized grating fasteners when galvanized grating is fastened to galvanized steel framing.
   1. Hilti “FCM Fastening System”.

F. Abrasive-Surfaced Steel Floor Plate: 1/4 inch thick unless noted otherwise, with steel abrasive integral with surface of ASTM A36 steel or ASTM A 283, Grade A, steel base plate.
   1. W.S. Molnar Co. “Slip-Not, Grade 2”.
   2. IKG Industries “Mebac Anti-Skid Plate”.

G. Checkered Steel Plate: Raised pattern floor plates 1/4 inch thick unless otherwise noted; of ASTM A 36 steel:
   1. Ryerson “Inland 4-Way Floor Plate”.
   2. U.S. Steel “Multigrip Floor Plate”.
   3. Central Steel “Four Way Steel Floor Plate”.

H. Tubing: Cold formed shapes per ASTM A 500, Grade B.

I. Highway-type Guide Rails: 10 gage steel. Galvanize rail sections and all fasteners.
   1. Armco Steel Corp. “Flex-Beam”.
   2. Syro Steel Corp. “Protecto-Ohio”.

J. Expansion Bolts:
   1. Manufacturer:
      a. Hilti “Kwik Bolt”.
      b. Rawl “Rawl-Stud”.
      c. Red Head “Wedge Anchors”.
   2. Anchor bolts and sleeve assembly of material indicated below with capability to sustain, without failure, a load equal to 6 times the load imposed when installed in unit masonry and equal to 4 times the load imposed when installed in concrete, as determined by testing per ASTM E 488, conducted by a qualified independent testing agency.
      a. Material: Carbon-steel components zinc-plated to comply with ASTM B 633, Class Fe/Zn 5.
      b. Material: Alloy Group 1 or 2 stainless-steel bolts complying with ASTM F 593 (ASTM F 738M) and nuts complying with ASTM F 594 (ASTM F 836M).

K. Epoxy Capsule Type Anchors: 2 part, threaded steel stud and epoxy adhesive filled capsule anchoring system. Install per manufacturer’s recommendations.
   1. Hilti “HVA Adhesive Anchor”.

L. Threaded Type Concrete Insert:
   1. Heckmann Building Products, Inc. “No. 444 Star Threaded Insert”.
   2. Hohmann & Barnard, Inc. “Malleable Iron Threaded Insert No. HF”.
   3. Richmond Screw Anchor Co. “Kohler Threaded No. UST 634”.

M. Prime Paint on Carbon Steel: Rust-inhibitive non-lead type.
   1. Shop Primer for Ferrous Metal: Rust-inhibitive, lead- and chromate-free, modified-alkyd primer complying with performance requirements in FS TT-P-664; selected for good resistance to normal atmospheric corrosion, compatibility with finish paint systems indicated, and capability to provide a sound foundation for field-applied topcoats despite prolonged exposure.
   2. Preferred shop primers are:
      a. Bruder 24-A-167 Gray.
      b. Carboline AD-29 Gray.
      c. Con-Lux Rust Arrestor 43 Gray.
      d. DuPont 65-Y-3055.
      e. Rust-Oleum 7086 Gray.
      f. Sherwin Williams E61A45 Gray.
      g. Tnemec 10-1009 Gray.
   3. Shop Primer for Ferrous Metal: Organic zinc-rich primer, complying with SSPC-Paint 20 and compatible with topcoat.
      a. Manufacturer:
         1) The Sherwin-Williams Company, “Corothane I GalvaPac Zinc Two Pack Primer B65G10/B69D210”.
         2) The Sherwin-Williams Company, “Zinc Clad III HS B69A100/B69V100/B69D11”.
         3) Carboline Company, “Carboline 621”.
         4) PPG Industries, Inc., “Aquapon Zinc-Rich Primer 97-670.

5) Tnemec Company, Inc., “Tnemec-Zinc 90-97.

N. Touch-up Paint on Galvanized Steel: Organic zinc-rich primer per SSPC-Paint 20:
   1. The Sherwin-Williams Company, “Corothane I GalvaPac Zinc Two Pack Primer B65G10/B69D210”.
   2. Carboline Co., “Carboline 621”.
   3. PPG Industries, “Aquapon Zinc-Rich Primer 97-670”.
   4. Tnemec “Tneme-Zinc 90-97”.

O. Aluminum:
   1. Extruded Bars, Rods, Shapes and Tubes. ASTM B 221, 6063 alloy.
   2. Structural Shapes: ASTM B 221, 6061 alloy.
   3. Flat Sheet and Plate: ASTM B 209, 1100, 3003 or 5052 alloy.
   4. Extruded Pipe: ASTM B 241, 6063 alloy.
   5. Fasteners: 2024 alloy for screws and 6061 for rivets.

2.2 FABRICATION

A. Connections And Workmanship
   1. Fabricate and install the items per:
      a. AISC “Specifications for the Design, Fabrication & Erection of Structural Steel for Buildings”.
      b. AISC “Code of Standard Practice for Steel Buildings and Bridges”.
      c. AISC “Specification for Architecturally Exposed Structural Steel”.
      d. AISC “Manual of Steel Construction”.
      e. AWS “Structural Welding Code”, AWS D1.1.
   2. Make detail pieces with all projecting corners clipped and filler pieces welded flush.
   3. Bolt or weld shop and field connections, unless otherwise noted or specified. Provide clips, lugs, brackets, straps, plates, bolts, nuts, washers and similar items, required for complete fabrication and erection. Use connections of type and design required by forces to be resisted, and to provide secure fastening.
   4. In bolting, draw up bolts or nuts tight. Use bolts of lengths required so that bolts do not project more than 1/4 inch beyond face of nut. Provide high-strength hexagonal head bolts with washers and hexagonal nuts.
   5. Maximize shop preassembly of fabricated items.
   6. Provide beam connections that comply with AISC standard 2 angle web connections that support 75% of the total uniform load capacity of the beam. Connections with angles bolted to the web shall meet the shear requirements for friction bolting and bearing type bolts per AISC specification Section 1.5.1.2.2.
   7. Remove burrs from sheared and punched metal.
   8. Provide air vents with punched 1 inch (25 mm) holes at 24 inches on center in all channels, angles, and plates embedded in concrete to vent trapped air produced when vibrating concrete in place..
   9. Bend metal edges to the minimum radius without causing metal separation at the bent edge.
   10. Ease exposed edges to a radius of approximately 1/32 inch unless otherwise indicated.

11. Weld seams and corners with continuous welds using methods that minimize distortion of members. Remove flux. Grind welds exposed in the finish work smooth, flush with adjacent surfaces, filleted at angular connections unless otherwise specified.
12. Drill, tap and reinforce fabrications to receive bolts and hardware for connection.
13. For exterior work, fabricate joints and connections to exclude water. Provide weep holes to drain moisture from precipitation or condensation
14. Provide connections that prevent bending, buckling or overstressing of the members based on a temperature range of 180 degrees F for the metal surfaces.
15. Remove sharp edges in pedestrian walk areas.
16. Provide exposed connections with flush, tight joints. Use exposed fasteners only as indicated and concealed fasteners wherever possible. Locate joints at concealed locations wherever possible
17. Provide holes required for the connection of other adjacent or adjoining work wherever holes are noted or can be determined prior to fabrication of the steel. Locate holes for bolting equipment to supports to a tolerance of plus or minus 1/16 inch of dimensions indicated.
18. Furnish members true to length so that assembling may be done without fillers, except where same are required or detailed. Trim projecting edges or corners flush where different members are assembled. Items shall be free from twists, bends, and open joints.
19. Fabricate members to a tolerance per AISC Code of Standard Practice.
20. Use welded studs for connections to tubing members in lieu of drilled and tapped holes.
21. Seal ends of tubing either by welding completely around where joining other members or by welding in a 3/16 inch plate at open ends.
22. Tag miscellaneous iron and steel, including anchor bolts, sleeves, and bases or otherwise mark for ease of identification at the project site.
23. Fit work together in the fabrication shop and deliver complete, or in parts, ready to be set in place.
24. Welding of aluminum work shall be done by the inert-gas metal-arc torch tungsten-arc torch or other specialized welding as approved by the Architect-Engineer.

2.3 FINISHES

A. General
1. Reference: NAAMM “Metal Finishes Manual for Architectural Metal Products” for application of finishes.
2. Assemble metal fabrications before finishing.

B. Galvanizing
1. Apply galvanizing after built-up members are completely fabricated. After galvanizing, ream holes to proper size and re-tap threads. Straighten shapes and assemblies true to line and plane after galvanizing. Repair damage to galvanized surfaces with zinc-rich galvanized touch-up paint specified.
2. Galvanize: Members specifically noted on the Drawings or specified as galvanized.
   a. Rolled, Pressed and Forged Steel Shapes, Plates, Bars and Strips: Per ASTM A123; average weight of zinc coating per square foot of actual surface, for 3/16 inch and less thickness members 2.0 ounces, for 1/4 inch and heavier members 2.3 ounces.

b. Iron and Steel Hardware: Per ASTM A153; minimum weight of zinc coating, in ounces per square foot of surface per Table 1 of ASTM A153, for the various classes of materials used on the Project.
c. Steel Sheet: Per ASTM A653; weight of zinc coating, per square foot on both sides of sheet, Coating Designation G90, minimized spangle and chemically treated.

C. Shop Prime Painting
1. Clean interior ferrous metals to be shop primed by power tool cleaning per SSPC-SP3 per SSPC Zone 1A.
2. Clean exterior metals to be shop primed by commercial blast cleaning per SSPC-SP6/NACE No. 3 per SSPC Zone 1B.
3. Shop paint ferrous metal 1 coat of priming paint, minimum 2.5 mils dry film thickness per SSPC-PA1, except that those surfaces in contact after assembling, and members embedded in concrete or masonry, need have no paint. Shop paint surfaces not in contact, but inaccessible after assembly, a second coat of priming paint before assembling. Allow surface to thoroughly dry before primer paint is applied.
a. Do not shop prime paint items specified or noted to be galvanized.
b. Do not shop prime paint members that are to receive spray-on fireproofing.
4. Stripe paint corners, crevices, bolts, welds and sharp edges.

D. Aluminum Finishes
1. Provide aluminum finishes as designated by the Aluminum Association (AA).
2. Fabricated Finish: AA-M10 (mill finish).
3. Clear Anodic Finish: (Class I) AA-M12C22A41.

2.4 STEEL FRAMES

A. *Steel Frames [D]:* Furnish for doors, hatches, grilles and other openings, fabricated from structural shapes and not indicated as part of the Structural Steel (Work) (Contract).

B. Fabricate frames from rolled steel sections or rolled steel sections and steel plate, and provide connections and anchors for building into adjoining materials. Select sections for trueness of web and flange. Straighten members as required so that the finished frames are uniform, square and true throughout the length and depth of the assembled units.

C. Connect built-up members of frames by welding. Miter or cope and join members with continuous welding beads. Provide and weld solid steel bar stops, spacers, and fillers to frames as indicated. Provide frames with temporary spreader bars to prevent springing frames out of shape prior to and during erection.

D. Frames for floor openings shall be of sizes indicated and so fabricated that top of frame and frame insert of plate or bar grating are flush with finish floor.

2.5 STEEL CURBS AND SILLS

A. *Steel Curbs and Sills [D]:* Fabricate from structural steel shapes and steel plates. Where curbs extend around corners, butt or miter, and join the members by continuous welding bead. Grind

welding beads upon which covers or other members bear, and exposed welding beads, smooth and flush. Round exposed edges of members by grinding.

2.6 DOOR FRAMES

A. Steel door frames and associated items which are shown or noted as miscellaneous metal work shall be as indicated and fabricated with heads and jambs of structural shapes, plates, etc., according to typical details. All corners shall be square and true. Weld all exposed joints and grind flush and smooth. Provide anchors on frames to be set in masonry or concrete. Unless otherwise shown or specified herein, cut holes in channel jambs to receive latch bolts and/or dead bolts for door locks and latches. Fit door frames with bar stops as shown or noted and plug weld to frame.

B. All steel door frames for fire doors shall conform to the underwriter's requirements and shall have joints formed by extending head members over jambs and securely fastened by a continuous weld.

C. Frames for overhead doors shall have jamb members extended upward for mounting tracks and securing frames as shown, noted and as required by the door installation.

D. Cut back jamb channels, extend up and connect to girts above, where and as shown or noted.

E. For each freight elevator hoistway door opening, provide metal sills and steel channel door frames with jambs from floor to door head and extended upward and connected to the building construction above. The frames and sills shall be plumb and in alignment with frames and sills of the other openings in the hoistway. Door sills shall be made of ¼ inch thick abrasive surfaced steel floor plate by one of the manufacturers listed below, or similar material approved by the Architect-Engineer.
   1. IKG Industries, "Mebac Floor Plate".
   2. Safe Walk Inc., "Algrip".

2.7 ANCHORS

A. Anchors: Furnish for frames, curbs, sills, and other miscellaneous metal members shown anchored into concrete or masonry. Fabricate anchors from strap iron bent to shape or use weldable headed studs, welded to backs of members, extended with bent or head end for building-in as conditions require, of sizes and spacing as noted. Where size and spacing are not noted, furnish 1-1/2 inch wide by 1/4 inch thick by 8 inches long size anchors for concrete and 1-1/2 inch wide by 1/8 inch thick by 8 inches long size anchors for masonry. Space masonry anchors to fit the jointing of the adjacent masonry work. Unless otherwise noted, space anchors at 36 inches or less on centers.

B. Where anchors and plates or clips are to be built-in for attachment of later work, provide bolts in the plates or clips, welded to back, with threaded ends extended as required.

C. For attaching work to masonry or concrete, where anchors or inserts cannot be built-in, provide specified expansion anchors and machine bolts or screws.

2.8 LADDERS

A. *Fixed-rail Type Steel Ladders [D]:* Fabricate with side rails of steel flat bars of 2-1/2 inches by ½ inch size spaced 20 inches apart, unless other size and spacing is noted. Fit ¾ inch solid section steel bar rungs into punched holes in side rails, at 12 inches on center and weld rungs in place and grind welds smooth. Weld steel brackets to side rails, at not over 6 feet on center, to secure ladders in place.

2.9 STEEL PIPE RAILINGS

A. *Steel Pipe Railings [D]:* Fabricate from standard weight, carbon steel pipe or of round structural steel tubing. Where railing size is not noted, use members of 1-1/2 inch nominal diameter (actual 1.9 inch outside diameter). Use Schedule 80 pipe or equivalent tubing for vertical members such as posts and use Schedule 40 pipe or equivalent tubing for horizontal members such as railings. Incorporate 4 inch high toe guard where required.

B. Perform joining of post, rails, and corners by one of the following methods:
   1. Use flush-type weld-on steel railing fittings, such as ells, tees and crosses for joining railing members together and use preformed flush-type weld-on railing radius elbows for railing bends and corners. Use internal splice locks/connectors for welding pieces of railings together.
   2. Railings may be bent at corners instead of jointing, provided the bends conform to the Drawing and are made in suitable jigs and that the cylindrical cross-section of the pipe is maintained throughout the entire bend.

C. Where post spacing is not shown, space posts not more than 5 feet on center. Erect posts plumb in each direction.

D. Provide concrete anchorage for posts by means of pipe sleeves set into the concrete. Sleeves shall be galvanized, standard weight, steel pipe, of inside diameter approximately 1/2 inch more than outside diameter of post, not less than 6 inches long, and having a steel plate closure secured to the bottom of the sleeve. Steel wedge posts into sleeves, and fill space between post and sleeve solid with a quick-setting hydraulic cement.

E. Provide steel anchorage for posts by welding to the steel supporting members.

F. Provide removable sections of handrail with posts set in close-fitting sleeves with tapped holes at third points on sleeve circumference and Allen head set screws for securing posts to sleeves.

G. Fabricate wall railings with wall brackets for intermediate support and wall return fittings at ends. Brackets and end fittings shall be of steel and shall be of proper height to provide 1-1/2 inch clear space between wall and railing. Provide brackets at not over 5 feet on center. Anchorage to walls shall be by bolting through the bracket flange into the wall construction.

2.10 SAFETY CHAINS

A. *Safety Chains [D]:* Fabricate of galvanized, welded type, proof coil steel chain, 3/16 inch nominal diameter, with not less than 10 links per foot, proof loading of not less than 1,000 pounds, complete with snap fasteners on each end and eye bolts for attachment. Snap fasteners shall be boat type with strength equal to the chain proof loading. Eye bolts shall be 3/8 inch bolt with 3/4 inch eye inside diameter and complete with 1/8 inch thick fastening plate. Provide chains 6 inches longer than guarded opening.

2.11 STEEL STAIRS

A. *Steel Stairs [D]:* Construct to support a uniformly distributed live load of 100 pounds per square foot, in addition to the dead load, with a safety factor of 5, but never of less strength than to carry safely a moving concentrated load of 1,000 pounds. Provide steel framing, hangers, columns, struts, clips, brackets, bearing plates, and other components required for the support of stairs and platforms.

B. Stringers: Provide of structural steel shapes. Close exposed ends of stringers with plates; continuously weld and grind joints smooth. Closures, covers, or filler plates shall be provided and placed between stair stringers and walls where and as shown. If not shown, provide loose 20 gauge sheet metal angles 1 inch x 4 inch for field installation. To be trimmed and installed with 1 inch leg facing down against wall using caulk/adhesive at wall and as bond to horizontal stringer surface.

C. Platform: Construct of structural steel channel headers and structural steel framing members. Connect headers to stringers and framing members to stringers and headers. Bolts may be used only where concealed in the finish work.

D. Provide treads and landing platforms for stairs. Treads shall be complete with supporting brackets with brackets designed to be welded or bolted to stringers unless otherwise noted. Platforms shall be designed for welding to platform framing unless otherwise noted.
   1. Fabricate pan type treads, landings and risers from not less than 12 gage, uncoated, hot-rolled, carbon steel of structural quality, per ASTM A 570, Grade 30. Form riser and subtread pans to profile indicated. Provide 3 inch wide cast iron abrasive safety nosings with rounded no-lip edge, complete with anchors for embedment in cement fill, of length equal to width of tread or landing, as follows:
      a. American Safety Tread Co. "820".
      b. Safe-T-Metal Co. "BF Nosing".
      c. Wooster Products, Inc. “120”.
   2. Fabricate bar grating treads and landings of bar grating. Treads shall be standard prefabricated product of grating manufacturers specified, welded or bolted into place, complete with non-slip type safety nosings. Construct landings of regular bar grating panels; provide non-slip abrasive type safety nosing at landing edge, toe plate at other open sided edges and end-banding bars at all other edges.
   3. Fabricate floor plate treads and landings, of steel checkered plate specified under materials, bent to profile shown and with back edge stiffener on treads.

E. Provide railings for stairs, as previously specified in the article “STEEL PIPE RAILINGS”.

F. Use welding for joining pieces together, except as otherwise noted. Bolts or similar fastenings shall not appear on finish surfaces. Make joints true and tight, and connections between parts light-tight. Welds shall be continuous and ground smooth. Fabricate stair work to be in line, plumb, square, true, and level. Runs shall register level with floor and platform levels.

2.12 PIPE GUARD POSTS

A. *Pipe Guard Posts [D]:* Fabricate of diameter noted, using standard weight carbon steel pipe or structural steel tubing. Provide flanged welded-on base plates for bolted-in-place posts. Provide sleeves, with base plates, for posts noted to be removable; provide holes, at third points on the circumference of the sleeve and post,, and insert removable steel through-pins for securing of posts in sleeves.
   1. Provide yellow, low density polyethylene thermoplastic pipe guard post sleeves 0.25 inch nominal thickness to fit diameters and lengths of pipe guard posts indicated on the drawings.
      a. Ideal Shield, “Bumper Post Sleeve”

2.13 BAR GRATING

A. *Bar Grating [D]:* Provide for use at catwalks, platforms, ladders, trenches and elsewhere as shown, of welded construction. No notching of bearing or cross bars permissible. For conditions shown on the Drawings, grating shall support a uniform load of 100 pounds per square foot. Band cut grating edges; use same size bars as bearing bars.

2.14 FLOOR PLATE

A. Shearing, cutting, or punching shall leave clean, true lines and surfaces. Floor plate shall be fastened in place by welding or bolting unless otherwise noted. Removable floor plate must be bolted. Bolts shall conform to ASTM A 325, countersunk.
   1. Use specified abrasive-surfaced floor plate where specifically noted.

2.15 HIGHWAY-TYPE GUIDE RAILS

A. *Highway-type Guide Rails [D]:* Provide on steel posts, complete with flared end sections, in the locations and to the extent shown. Steel posts shall be of size noted.
   1. Galvanize exterior posts.

2.16 MISCELLANEOUS FRAMING

A. Fabricate miscellaneous steel framing and supports that do not form a part of the structural steel framework or that are not indicated to be furnished under the Structural Steel (Work) (Contract). Use structural steel plates, shapes, bars and tubing of sizes and arrangement shown.

2.17 GROUT

A. Metallic, Non-Shrink Grout: Ferrous aggregate grout per ASTM C 1107 for heavy loading applications.

B. Non-Metallic, Non-Shrink Grout: Nonstaining, noncorrosive grout per ASTM C 1107 for interior and exterior applications.

PART 3 EXECUTION

3.1 INSTALLATION

A. Fabricate items that are to be built into masonry or concrete and deliver to project site for setting; furnish items complete with bolts, anchors, clips, etc., ready to set. Furnish, completely install and connect other items. Erect items to proper lines and levels, plumb and true, and in correct relation to adjoining work. Parts shall be secured in a rigid and substantial manner using concealed connections whenever practicable.

B. Where necessary to secure work to the structure by means of expansion bolts, cinch anchors, and similar connections, do the work of laying out and installing such connections, installing the work and bolting up, unless otherwise noted. Drill or core holes in concrete and masonry work.

C. Plumb and true the vertical members to a tolerance per AISC Code of Standard Practice. Level the horizontal members that support equipment, walkways, etc., to a tolerance per AISC Code of Standard Practice. Install such work flush with existing members where required.

D. Provide bolts, shims, blocks, nuts, washers, wedging pieces, etc., required for complete installation, unless otherwise noted.

E. Drill field holes for bolts or rivets. Do not burn holes.

F. Furnish fitting-up bolts, drift pins, other tools and equipment and do necessary reaming of unfair holes found in field connections. New holes or enlargement of unfair holes by use of cutting torch is cause for rejection of the entire member. Replacement shall be made at Contractor’s expense.

G. Perform cutting, drilling, and fitting required for the installation of miscellaneous metals work. When required, fit work in place before fastening.
   1. Burning of holes or flame cutting of parts will not be permitted, except on prior written permission of the Owner’s Representative.
   2. Where shoring is required, provide supports with sufficient cribbing to spread the load to members capable of supporting the load. If the immediate construction cannot support the shoring, shore the loads between floors adequately to transfer loads to the first floor slab.

H. Field welds shall be approved by Owner's Representative before prime painting. Slag shall be cleaned from welds prior to inspection by the Owner's Representative.
   1. Protect Owner's personnel during welding in occupied areas.

I. Adjust railings prior to securing in place to insure proper matching at butting joints and correct alignment throughout their length.

J. Provide 2 safety chains at man openings in guard railings, and elsewhere as indicated; place top chain at no less than 36 inches above floor elevation and second chain 24 inches above floor elevation, unless otherwise noted.

K. Install steel posts for highway-type guide rails at 6 feet 3 inches or 12 feet 6 inches on center unless otherwise noted, and as required to suit lengths of runs. Set posts in concrete. Bolt rails to posts, including flared end sections where required or indicated. Tighten post and splice bolts and nick the threads to prevent loosening.

L. Set steel pipe guard posts in concrete as shown, and fill posts with concrete formed to a dome shape at top of pipe.

3.2 SETTING, BEARING AND LEVELING PLATES

A. Clean concrete steel and masonry bearing surfaces.

B. Set bearing and leveling plates on wedges, shims or leveling nuts. Tighten anchor bolts after members have been positioned and plumbed. Cut shims flush with bearing plates. Pack with grout.

3.3 INSTALLATION OF MISCELLANEOUS FRAMING AND SUPPORTS

A. Install framing and supports as indicated on shop drawing and per manufacturer's requirements and instructions.

B. Rigidly brace with additional members if necessary supports for operable partitions and ceiling hung toilet partitions

3.4 TOUCH-UP

A. Clean painted and galvanized surfaces after installation. Touch-up shop-primed surfaces damaged during shipment and erections. Use same paint as used in the shop. Apply minimum 2.5 mil film thickness. On galvanized surfaces, touch-up damaged galvanizing with specified zinc-rich galvanizing touch-up paint.

END OF SECTION

Revision History	
Date	**Rev. No.**
A	0
B	0
C	0
D	0
E	0
F	0
02-19-09	0

DS/djo
C:\D\TIMSDATASF\BROOKHAVEN_NATIONAL_LABORATORY\SF070003\200-PROJEXEC\280-SPEC\05500.DOC

THIS PAGE INTENTIONALLY LEFT BLANK

SECTION 06100

ROUGH CARPENTRY

PART 1 GENERAL

1.1 SUMMARY

A. Scope
1. Provide rough carpentry items as shown, as specified or as required to support finished work.
2. Use a minimum of 50% of wood-based materials and products which are certified in accordance with the Forest Stewardship Council's (FSC) Principles and Criteria for any wood building components to meet criteria of LEED NC 2.2.

B. Related Work Specified Under Other Sections
1. Formwork for concrete - Division 3.
2. Finish Carpentry – Division 6.

1.2 QUALITY ASSURANCE

A. Requirements For Preservative Treatment
1. Preservative pressure treated lumber and plywood shall be clean and free of surface deposits.
2. Each piece shall be indelibly ink stamped with the quality mark of an approved independent third party inspection agency having a follow-up testing and inspection service at the treating plant over the quality of the treated product, and whose service is certified by an approved overview agency such as American Wood Preservative Association (AWPA).

B. Requirements Of Regulatory Agencies
1. In addition to locations indicated or specified, provide fire retardant treated lumber and plywood in locations required by code, by governing authorities having jurisdiction, or by the Owner's Underwriters.

1.3 SUBMITTALS

A. Furnish submittals for items that are identified in this Section by a different typeface and a bracketed code (e.g., *Item [L]*). Refer to Section 01340 for definition of codes for types of submittals and the administrative requirements governing submittal procedure. General submittal requirements pertaining to this Section are specified under this Article.

B. *Treatment Certificates [C]*: Submit certificates for preservative and fire retardant treated lumber and plywood when requested by the governmental authority having jurisdiction. Certificate to be from an independent accredited testing agency having a re-examination inspection service at the treating plant.

1.4 PROJECT CONDITIONS

A. Deliver and store lumber and plywood at the project site in a manner to minimize exposure to moisture migration.

B. Exercise special care in storing, handling and installation of preservative and fire retardant treated lumber and plywood so as to prevent moisture absorption of such items.

PART 2 PRODUCTS

2.1 WOOD MATERIALS

A. General
   1. Each piece of lumber shall bear the official trademark and grade of the manufacturer's association or inspection bureau under which it was manufactured and graded. Lumber shall be seasoned, surfaced four sides and kiln or air dried to moisture content specified in the association's rules, except that moisture content shall not exceed 19 percent.

B. Lumber Use And Species
   1. Furring, Grounds, and Similar Use: Western Wood Products Association (WWPA) "Standard", "Number 2 Common" or better Douglas Fir-Larch, Hem-Fir, Pine, Engelmann Spruce, Cedar; or Southern Pine Inspection Bureau (SPIB) Number 2 Southern Pine.
   2. Nailers, Blocking, Framing, Rough Bucks, and Rough Lumber Not Otherwise Specified: Western Wood Products Association (WWPA) "Utility", Number 3 or better Douglas Fir, Hem-Fir, Lodgepole Pine, Western Cedars; or Southern Pine Inspection Bureau (SPIB) Number 2KD Southern Pine.
   3. Sheathing: Western Wood Products Association (WWPA) "Number 4 Common" Douglas Fir-Larch, Hem-Fir, Pine, Engelmann Spruce or Cedar.
   4. Framing for Utility Shelving: "C Finish" boards, Southern Yellow Pine, Sugar Pine, Douglas Fir, Engelmann Spruce, or Western Red Cedar.

C. Plywood Use And Species
   1. Sheathing: American Plywood Association (APA), PS 1-83 Product Standard, 32/16 Rated Sheathing, Exposure 1, of thickness noted.
   2. Exterior Plywood: American Plywood Association (APA), PS 1-83 Product Standard, BB Group 2 Exterior, of thickness noted.
   3. Utility Panels and Shelving: American Plywood Association (APA), PS 1-83 Product Standard, BD Interior, Exposure 1, Group 1, sanded, 3/4 inch thick unless otherwise noted.

2.2 FASTENING MATERIALS

A. General: Use fastening materials of types appropriate for the conditions encountered, including wood to wood, wood to masonry or concrete, and wood to metal. Use anchors as shown for

securing blocking, nailers and framing. Threaded stud bolts and nuts, or powder actuated fasteners, shall be used for securing wood to structural framing.

B. Threaded Studs: Threaded studs for securing wood nailers or other items noted, complete with nut and washer.
   1. Erico Products, Inc. “Blue Arc Shear Connector Studs”, (440-248-0100).
   2. Midwest Fasteners, Inc., "Weld Studs", (800-852-8352).

C. Powder Actuated Fasteners: Drive pin type, threaded, of length to penetrate the steel member and depth of wood member, and a washer of sufficient diameter to secure the wood member. Fasteners and low-velocity powder actuated tools by same manufacturer.
   1. Hilti, Inc.
   2. Ramset, Inc.

D. Nails and Staples: Galvanized carbon steel, per Federal Specification FF-N-105B.

E. Screws: Galvanized carbon steel per Federal Specification FF-S-107C and natural bright finish carbon steel per Federal Specification FF-S-111C.

F. Bolts, Washers, Expansion Shields, and Nuts: Zinc-coated carbon steel, per Federal Specification FF-B-561C, FF-B-575C, FF-W-92A, FF-B-588C and FF-N-836D.

G. Bar or Strap Anchors: ASTM A36 carbon steel 1/8 inch thick unless otherwise noted, hot dipped galvanized, with 2.0 ounce zinc coating per square foot of surface, per ASTM A123.

2.3 WOOD TREATMENTS

A. Preservative Treatment
   1. *Preservative Treatment [C]*: Use preservative pressure treated wood nailers, blocking, rough bucks, furring, grounds and other rough lumber items that come in contact with concrete, masonry or metal and are inaccessible in the finished work. Preservative pressure treatment shall be in accordance with American Wood Preservers Association (AWPA) Standards P5, C1, C2 and C9. Each piece shall be stamped with indelible ink with American Wood Preservative Association (AWPA) Quality Mark. Perform all milling along the grain of the wood prior to preservative pressure treatment.
      a. Hickson Corporation “Wolman-CCA”.
      b. Hoover Treated Wood Products “CCA”.
      c. Osmose Wood Preserving Company “Osmose CCA”.

B. Back Painting
   1. Primer-Sealer: Apply one coat in the shop, on back surfaces and edges of rough lumber items that are not treated as described above.
      a. ICI Dulux "Ultra-Hide Alkyd Wood Undercoater:.
      b. PPG Industries, Inc. “Speedhide 6-6 Interior Undercoater”.
      c. Benjamin Moore "Alkyd Enamel Underbody 217".
      d. Sherwin-Williams “Promar 200”.

PART 3 EXECUTION

3.1 PREPARATION

A. Provide rough hardware required to complete this Work, including attachments of wood to wood, wood to masonry or concrete and wood to metal. Counterbore holes for nuts and heads of fasteners, and countersink all screws so as to be flush. Drill holes in lumber for fasteners. Furnish rough hardware items, loose, that are scheduled to be pre-set in masonry or concrete, to expedite the installation of such Work.
   1. In pressure treated wood, drill undersize holes for screws and nails to prevent splitting of wood members.

B. For back painted members, after any such members are cut in the field, apply a brush coat of the same material used in the shop, to reseal the surface.

C. When preservative pressure treated lumber is cut across the grain in the field, apply preservative to cut end in accordance with American Wood Preservers Association (AWPA) Standard M4 Section 1.5.

D. Field cutting (ripping) along the grain is not allowed for either fire retardant or preservative pressure treated lumber.

3.2 FURRING AND GROUNDS

A. Provide wood furring and grounds required to install wood sheathing, gypsum wall board, gypsum and metal lath, and wood paneling to masonry or concrete. Install in parallel rows, spaced at 16 inches on center; and in addition, to frame the perimeters of such areas and corners. Use nominal 1 inch by 3 inch solid stock unless otherwise noted. At metal lath, provide beveled edge to develop good plaster keys.

B. Provide wood furring required to install cabinet work and other finish items to masonry, concrete, gypsum wall board or plaster substrates to properly secure these items.

C. Secure members rigidly in place, at 2 feet on center, maximum, using flush bolts. Where members are applied over stud partition framing, bolt members in place through the substrate and into the metal stud framing.

3.3 NAILERS, BLOCKING, FRAMING AND ROUGH BUCKS

A. Provide nailers, blocking, framing, rough bucks, sheathing and other rough lumber necessary for a complete installation.

B. Anchor wood members to concrete, masonry, or steel as shown, or required, complete with the fasteners specified. If powder actuated fasteners are used, comply with safety requirement of OSHA and fastener manufacturer. Where size and spacing are not shown or noted, secure members with 1/2 inch diameter bolts or threaded studs; not less than two for each individual piece; and at not more than 24 inches on center, maximum, for continuous members. Provide

washers under bolt heads and nuts. Provide nailers and blocking in long lengths to minimize joints. When joints are necessary, join pieces without projecting edges.

C. Lay sheathing close and nail solidly at each bearing; at not over 6 inches on center at continuous bearing members. Stagger end joints of adjacent sheets, with joint over bearings, in all cases.

3.4 UTILITY PANELS AND SHELVING

A. Provide utility panels in telephone equipment rooms, electrical equipment rooms and elsewhere as required for mounting of equipment. Neatly install panels, with close butted joints where more than one sheet is required. Expansion bolt the panels to concrete or masonry substrates. At metal stud partitions, bolt panels in place through the substrate and into the metal stud framing. Unless otherwise noted, provide full 8 foot high panels.

B. Provide wood utility shelving in janitors closets, and equipment rooms. Install 1 inch x 3 inch framing to support shelving on ends and at back. Provide plywood shelving, with solid wood nosing on exposed edge; use single piece shelves in each location. Unless otherwise noted, install 5 shelves at each indication for shelving.

3.5 TEMPORARY ROOF CURB COVERS

A. Provide temporary plywood covers, complete with wood support blocking as necessary, over roof curbs until permanent equipment is installed on the curbs. Use minimum 3/4 inch thick exterior grade plywood.

END OF SECTION

Revision History	
Date	**Rev. No.**
A	0
B	0
C	0
D	0
E	0
F	0
02-19-09	0

DS/djo [AR,ST]
C:\D\TIMSDATASF\BROOKHAVEN_NATIONAL_LABORATORY\SF070003\200-PROJEXEC\280-SPEC\06100.DOC

THIS PAGE INTENTIONALLY LEFT BLANK

SECTION 06200

FINISH CARPENTRY

PART 1 GENERAL

1.1 SUMMARY

A. Scope
   1. Provide finish carpentry items as shown, as specified or as required to support finished work.
   2. Use a minimum of 50% of wood-based materials and products which are certified in accordance with the Forest Stewardship Council's (FSC) Principles and Criteria for any wood building components to meet criteria of LEED NC 2.2.

B. Section includes all finish carpentry work, complete with accessories and related work, as indicated and specified, including but not necessarily limited to the following custom work:
   1. Plastic laminate toilet room vanities and counters work.
   2. Shelving.

C. Related Work Specified In Other Sections
   1. Rough Carpentry - Division 6.
   2. Sinks In Countertops- Division 15.

1.2 SUBMITTALS

A. Furnish submittals for items that are identified in this Section by a different typeface and a bracketed code (e.g., *Item [L]*). Refer to Division 1 General Requirements for definition of codes for types of submittals and the administrative requirements governing submittal procedure. General submittal requirements pertaining to this Section are specified herein under this Article.

B. *Finish Carpentry Shop Drawings [D]*: Submit for review, completely detailed shop drawings showing all information necessary for the fabrication and erection of all work specified herein. The shop drawings shall show dimensions, construction details, jointing details, wood species and grade, trim, finishes, paneling layout, hardware and details relating to adjacent work.

C. *Finish Carpentry Product Data [P]*: Submit product data on all catalogue-type components.

D. *Finish Carpentry Material Samples [S]*: Submit samples of each of the following items:
   1. Plastic laminate chips of colors, patterns and textures specified.
   2. Solid surface chips of colors, patterns and textures specified.

E. Submittals of shop drawings, product data, and samples are required for all work of the Section per Division 1, General Requirements.

1.3 QUALITY ASSURANCE

A. Reference Standard
   1. Use the “Quality Standards” of the Architectural Woodwork Institute (AWI) which are referenced and hereby made a part of this Section. Use “Premium Grade” for all work as defined in the latest edition of the AWI “Quality Standards”.
   2. Use plastic laminates which conforms to National Association of Plastic Fabricators.
   3. Use grades of lumber, plywood and particleboard as defined by the rules of the recognized association of manufacturers producing the kind or species of lumber, plywood and particleboard specified in this Section. Use only lumber, plywood, and particleboard grade-stamped by the inspecting authorities.

1.4 SITE CONDITIONS

A. The woodwork manufacturer is responsible for dimensions not controlled by job conditions. Shop drawings shall show all required field measurements. The cooperation of the Contractor and the woodwork manufacturer is required to establish and maintain these field dimensions.

1.5 DELIVERY, STORAGE AND HANDLING

A. It is the joint responsibility of the woodwork manufacturer and the Contractor to make certain that woodwork is not delivered until the building and storage areas are sufficiently dry and complete so that the woodwork will not be damaged. The Contractor will replace defective or damaged materials at no cost to the Owner.

B. Crate, ship and deliver all materials to the Site and store in accordance with manufacturer’s instructions and standards of the National Woodwork Manufacturers Association.

C. Protect all finished surfaces after installation and finishing from damage and soiling. Maintain protection during subsequent work operations, and remove same upon Owner’s Representative’s acceptance or when instructed by Owner’s Representative.

PART 2 PRODUCTS

2.1 MATERIALS AND FABRICATION

A. General
   1. Use lumber bearing the official trademark and grade of the manufacturer’s association or inspection bureau under which it was manufactured and graded, except as specified otherwise herein. Use seasoned lumber, surfaced four sides and kiln or air dried to moisture content specified in association’s rules, except that moisture content is limited to a maximum of 11 percent.
   2. Lumber Standards: Comply with DOC PS 20, "American Softwood Lumber Standard," for lumber and with applicable grading rules of inspection agencies certified by the American Lumber Standards Committee Board of Review.

3. Softwood Plywood: Comply with DOC PS 1, "U.S. Product Standard for Construction and Industrial Plywood."
4. Hardwood Plywood: Comply with HPVA HP-1, "Interim Voluntary Standard for Hardwood and Decorative Plywood."
5. Particle Board: Comply with ANSI A 208.1 Grade M-2 Exterior Glue.
6. *Preservative Treatment [P]*: Comply with NWWDA I.S. 4 for exterior finish carpentry to receive water-repellent preservative treatment.

B. Lumber Use And Species
1. Furring, Grounds and Similar Use: WWPA “Standard”, “No. 2 Common” or better, Douglas Fir-Larch, Hem-Fir, Pine, Engelmann Spruce, Cedar, or SPIB No. 2 Boards Southern Pine.
2. Nailers, Blocking, Framing, Rough Bucks, and Rough Lumber Not Otherwise Specified: WWPA “Utility”, “No. 3” or better, Douglas Fir, Hem-Fir, Lodgepole Pine, Western Cedars, or SPIB No. 2KD Southern Pine.

C. Plastic Laminate Cores
1. Plywood: Douglas Fir or Pine, interior A-D grade conforming to P.S. 1-74, or thicknesses indicated.
2. Particle Board: Douglas Fir or Pine, mat-formed medium density conforming to Commercial Standard 236-66, of thicknesses indicated.

D. Fastening Materials
1. General: Furnish fastening materials of types appropriate for the conditions encountered, including wood to wood, wood to masonry or concrete and wood to metal.
2. Nails and Staples: Galvanized carbon steel, conforming to the requirements of Fed. Spec. FF-N-105B.
3. Screws: Galvanized carbon steel conforming to the requirements of Fed. Spec. FF-S-107C and natural bright finish carbon steel conforming to the requirements of Fed. Spec. FF-S-111C.
4. Bolts, Washers, Expansion Shields, and Nuts: Zinc-coated carbon steel, conforming to the requirements of Fed. Spec. FF-B-561C, FF-B-575C, FF-W-92A, FF-B-588C and FF-N-836D.
5. Adhesives: Aliphatic or phenolic-resin wood glue recommended for general carpentry use.

E. Plastic Laminate [P,D,S]
1. *Plastic Laminate [S]*: Provide high pressure plastic laminate consisting of melamine-impregnated surface papers laminated over phenolic-impregnated kraft layers under high pressure and heat, as manufactured by Formica, Nevamar, Pioneer, Textolite, Wilsonart, or Westinghouse, and conforming to National Electrical Manufacturers Association (NEMA) Publication No. LD3-1980, with low gloss finish, in colors, patterns, and textures as selected, per approved samples. Provide the following types:
   a. Use NEMA LD-3, Standard Grade GP50, nominal .050 inch thick plastic laminate for straight horizontal and vertical surfaces.
2. Adhesive: Water resistant, in accordance with AWI recommendations, and as recommended by plastic laminate manufacturer.

3. Back Painting: Apply one coat of primer-sealer paint in the shop, on all wood surfaces and edges not covered with plastic laminate backer sheet, and that will be concealed in the finished work. See Painting – Division 9 for acceptable paint manufacturers and types.

F. Typical Countertops [P,D]

1. Unless otherwise noted construct countertops of plywood or particleboard as detailed, with back and end splashes where shown, complete with supports, with all exposed surfaces (including exposed supports) and edges surfaced with plastic laminate of colors and patterns selected for each countertop.
   a. AWI Quality Grade: Premium.
   b. All Exposed Surfaces: Plastic laminate.

G. Counters Work

1. *Counters [P,D]*: Provide counters constructed of plywood with all exposed surfaces and edges surfaced with plastic laminate.
   a. AWI Quality Grade: Premium

H. *Shelving [D,P]*:

1. Shelving: ¾-inch particleboard or medium density fiberboard shelving with solid-wood front edge.
   a. Shelf Cleats: 3/4-by-3 1/2-inch boards with holes to receive clothes rods, of same species and grade indicated above for interior lumber trim for opaque finish.
   b. Shelf Brackets: Prime-painted formed steel.

PART 3 EXECUTION

3.1 INSTALLATION

A. General Millwork

1. Provide all wood blocking and framing required to support items of finish carpentry. Use fastening materials of types appropriate for the conditions encountered, including wood to wood, wood to masonry, and wood to metal stud framing. Counterbore holes for nuts and bolt heads, and countersink for screws. Use concealed fasteners in exposed surfaces of finish carpentry.
2. Before installing finish carpentry, condition materials to average prevailing humidity in installation areas for a minimum of 24 hours.
3. Do not use materials that are unsound, warped, improperly treated or finished, inadequately seasoned, or too small to fabricate with proper jointing arrangements. Do not use manufactured units with defective surfaces, sizes, or patterns.
4. Furnish millwork in configurations shown and specified. AWI grading will take precedence over joiner details shown on Drawings. Provide tight joints. Miter exterior angles, cope interior angles and returns of trim moldings. Provide blind nailing where practicable. Secure work with finishing nails or screws and glue. Install trim in maximum practical lengths.
5. On surfaces exposed to view, set all nail heads and spackle. Countersink all screw heads and cover with neatly fitted wood plugs to match grain. Sand in accordance with AWI

grading. Fit and scribe all work to walls or other finished work in a careful manner, so as not to injure the surface in any way.

B. Plastic Laminate Work
   1. Install support framing for countertops not set on base cabinets and anchor to adjacent construction; install countertops on supports and secure thereto, in accordance with reviewed shop drawings. Make all cut-outs in counter. Carefully install all plastic laminate items complete in-place, including all incidental items not specifically noted elsewhere, properly aligned, set plumb and rigidly secured. Provide adjustments, closures, etc., as may be necessary to close to adjacent items and construction. Scribe and closely fit all items to adjacent work. Provide backing, grounds, anchors, bolts, fasteners, etc., necessary for securing work in place. Set all work level and plumb, securely anchored in place. Anchor counters to walls and secure through the wall finish into the studs behind. Seal joints at adjacent work with sealant specified in Section 07900.
   2. Paint all visible surfaces in plastic laminate work, other than finish plastic laminate itself, such as recesses, reveals, visible rough hardware, etc. Paint to match color of adjacent plastic laminate.

C. Clean up
   1. Clean up and dispose of all waste material and refuse that has been brought onto the job or that has accumulated as a result of the work. Leave the work broom clean or better.
   2. Replace finish carpentry that is damaged or does not comply with requirements. Finish carpentry may be repaired or refinished if work complies with requirements and show no evidence of repair or refinishing. Adjust joinery for uniform appearance.
   3. Touch up any damaged finishes to restore to new matching adjacent areas.

END OF SECTION

Revision History	
Date	**Rev. No.**
A	0
B	0
C	0
D	0
E	0
F	0
02-19-09	0

DS/djo
C:\D\TIMSDATASF\BROOKHAVEN_NATIONAL_LABORATORY\SF070003\200-PROJEXEC\280-SPEC\06200.DOC

THIS PAGE INTENTIONALLY LEFT BLANK

SECTION 07110

DAMPPROOFING

PART 1 GENERAL

1.1 SUMMARY

A. Scope
1. Apply mastic dampproof coating to exterior surface of exterior building walls below grade. Apply to outer vertical edge of wall footing, over top of footing, and up the wall to lap with masonry wall fabric flashing, or with expansion joint filler in paving work, or to extend to finish earth grades.

B. Related Work Specified In Other Sections
1. Cast-In-Place Concrete - Division 3.

1.2 QUALITY ASSURANCE

A. Installers' Qualifications
1. The Work of this Section shall be carried out by an approved installer having specialized in this Work as its primary business for at least 5 years, and having performed satisfactorily Work of this type, size and scope.
2. Employ craftsmen who are thoroughly skilled and completely familiar with the specified requirements. Provide the services of a competent foreman or supervisor who shall be available at all times during the progress of the work of this Section.
3. The Owner's Representative reserves the right to reject materials or workmanship not conforming to the Specifications at any time before final acceptance. Acceptance of materials or workmanship by the Owner's Representative shall not prevent its subsequent rejection if defects are discovered later. The Contractor shall remove installed materials that are rejected by the Owner's Representative and replace them at no additional cost to the Owner.

1.3 SUBMITTALS

A. Furnish submittals for items that are identified in this Section by a different typeface and a bracketed code (e.g., *Item [L]*). Refer to Division 1 General Requirements for definition of codes, types of submittals and the administrative requirements governing submittal procedure.

1.4 PRODUCT DELIVERY, STORAGE AND HANDLING

A. Deliver packaged materials to the project site in their original unopened containers, packages, and bundles, bearing labels identifying manufacturer's name, brand name, and grade or type.

B. Store packaged materials off the ground and protect from moisture, deterioration and contamination.

C. Remove broken containers and their contents from the project site. Dispose of in a legal manner and replace with new materials at no additional cost to the Owner.

1.5 PROJECT CONDITIONS

A. Environmental Conditions
   1. Do not apply dampproofing until concrete has attained full cure and initial shrinkage has occurred.
   2. Ambient temperature and humidity conditions shall be compatible to proper workability of materials specified and to a successfully completed installation. Commencement of work shall constitute acceptance of the surfaces to be dampproofed and the conditions at the site under which this work is to be done.
   3. Follow manufacturer's printed instructions for maintaining proper environmental conditions.
   4. Use emulsion type dampproofing on damp surfaces.

B. Protection
   1. Provide and maintain temporary protections to prevent damage to adjacent surfaces due to application of dampproof coating. Provide and maintain temporary protection to prevent damage to dampproof system during installation and until subsequent construction operations are commenced or until protective cover is in place.

PART 2 PRODUCTS

2.1 MATERIALS

A. *Emulsion Dampproofing For Damp Surfaces [P,G]*:
   1. Apply mastic dampproofing at the rate of 6 gallons per 100 square feet.
      a. Karnak Corporation "Karnak 920 AFHeavy Trowel"
      b. Chem Rex Inc. "Hydrocide 700"
      c. W. R. Meadows, Inc. "Sealmastic Type 3 Trowel-On Grade"
   2. Apply primer for emulsion type dampproofing per manufacturer's instruction: ASTM D 1227 Type III, Class 1.

B. Miscellaneous
   1. Asphalt shall be per ASTM D 449, Type B and primer per ASTM D 41.
   2. Woven glass fiber fabric, resin coated and compatible with dampproof coating shall be per ASTM D 1668, Type III.
   3. Premolded membrane-type protective board shall be 1/8 inch thick.
      a. Texmastic International, Inc. "Backerbord 501-A"
      b. W. R. Meadows Inc. "Sealtight PC-2 Protection Course"

PART 3 EXECUTION

3.1 GENERAL

A. Coordination
1. Coordinate the Work of this Section with the work of other trades doing adjacent or concurrent work so as to insure proper, timely, and adequate interface.

B. Inspection
1. If any part of the Contractor's work depends for proper execution or results upon the prior work of any other Contractor, the Contractor shall, prior to proceeding with the work, promptly report to the Owner's Representative any apparent discrepancies or defects that render it unsuitable for proper execution and results. Failure of the Contractor to report such discrepancies or defects shall constitute acceptance of the prior work as fit and proper to receive his work, except as to defects in work by others which may subsequently become apparent.

C. Surface Preparation
1. Examine surfaces to receive dampproofing. Remove laitance, projections, oil, grease, dirt, grime, dust or other conditions that would prevent obtaining a tight, uniform bonding of the dampproofing to the substrate, or that would be detrimental to the proper performance of the dampproofing.
2. Roughen surfaces as necessary to ensure proper bonding of dampproofing to the surfaces. Cut out defective areas and joints. Fill cut out areas, joints and holes with fillers and sealants compatible with the dampproofing. Cut out around items piercing the dampproofing plane to create a recess and fill the recess with sealant and flashings.
3. Provide slope on exterior horizontal below-grade ledges so as to drain away from building wall.
4. Remove projecting mortar from joints in back-up wythe of the masonry walls. Fill holes in mortar joints.
5. Apply primer to dusty or porous masonry or concrete. Allow primer to dry thoroughly before applying dampproofing.

3.2 INSTALLATION

A. Interior Work
1. Install in accordance with the manufacturer's recommendations unless otherwise noted.
2. Extend coating uniformly over entire surface. Apply from floor line to full height of wall unless otherwise noted on the Drawings.
3. Apply dampproof coating prior to installation of furring, nailers, blocking or other support members for installation of interior finish system.

B. Exterior Work
1. Install in accordance with the manufacturer's recommendations unless otherwise noted.
2. Extend coating uniformly over entire surface.
3. Treat and reinforce construction joints, horizontal joint between the bottom of the wall and top of the footing, at corners, at projections or changes in plane, where wall is penetrated

by utility service lines and at other points or lines of stress. Apply dampproof coating material, 1/16 inch thick, at each joint, embed a 12 inch wide strip of fabric into the material and apply a second 1/16 inch thick coating and extend beyond fabric edge a minimum of 1 inch. At wall penetration, apply sufficient dampproof coating material to develop a cove, extending a 1/16 inch thick coating onto wall surface a minimum of 6 inches and onto pipe or sleeve an equal distance; embed 12 inch wide strip of fabric into the material and apply a second 1/16 inch thick coating, terminating beyond fabric edge a minimum of 1 inch.

4. After dampproof coating has initially cured and prior to start of subsequent construction operations in the area, apply a layer of protective board over the coating. Apply protective boards with butted joints and secure boards to coating with spots of mastic to hold the board in place during backfill operations.
5. No backfills shall be placed until dampproof coating and protection board installation is accepted by the Owner's Representative.

3.3 ADJUSTING AND PATCHING

A. Prior to placing of protective board, inspect the dampproofing plane and repair any damaged or defective area to provide a continuous dampproofing plane. Prior to commencement of subsequent construction operations, examine the protective board for damage or defective conditions. Determine if damage or defective condition has affected the dampproofing plane and the protective board course. Repair damaged or defective area to provide a continuous dampproofing plane and a continuous protective course.

B. Remove any improperly applied dampproofing material and properly prepare and patch surfaces and reinspect.

END OF SECTION

Revision History	
Date	**Rev. No.**
F	0
02-19-09	0

SM/djo
C:\d\timsdatasf\BROOKHAVEN_NATIONAL_LABORATORY\SF070003\200-PROJEXEC\280-SPEC\07110.doc

SECTION 07533

PVC SINGLE-PLY ROOFING

PART 1 GENERAL

1.1 DESCRIPTION

A. Description Of System
   1. Provide a reinforced PVC (polyvinyl chloride) single-ply thermoplastic sheet membrane fully-adhered heat-welded non-ballasted roofing system, including base flashing system and other accessories as specified. Roofing system to have a Solar Reflectance Index (SRI) of 78 minimum to meet LEED NC 2.2.
   2. The details on the DRAWINGS (for items such as nailers, flashings, terminations, etc.) for single-ply roofings are general in nature; where details of system of the proposed single-ply roofing manufacturer differ from those shown, the CONTRACTOR shall include all costs of making the necessary revisions to the details in order to accommodate the proposed single-ply roofing system.

B. Related Work Specified Under Other Sections
   1. Rough Carpentry - DIVISION 6.
   2. Roof Insulation - SECTION 07220.
   3. Preformed Metal Siding, with coping/counterflashing at parapet walls - SECTION 07411.
   4. Roof Sheet Metal and Flashing - SECTION 07600.
   5. Roof Accessories - SECTION 07720.
   6. Roof Drains - DIVISION 15.

C. Related Work Performed Under Other Contracts
   1. Roof Drains - MECHANICAL CONTRACT.

D. Products Installed But Not Furnished Under This Section
   1. Metal roof deck flute filler strips installed in conjunction with temporary cut-off strips furnished under SECTION 07220.

1.2 SYSTEM DESCRIPTION

A. Design Criteria
   1. Provide the single-ply roofing system to conform with the following design criteria:
      a. U. L. Class A
      b. F. M. Class I fire, and fully-adhered to meet 1-90 windstorm classification of F. M. 1-29 and 1-29S.

1.3 QUALITY ASSURANCE

A. Applicator Qualifications
   1. The applicator of single-ply roofing work must be an applicator certified by the single-ply membrane manufacturer, have a minimum of 5 years experience and shall have equipment of sufficient quantity and in proper operating condition to perform this work efficiently.

B. Inspection
   1. The OWNER will retain the testing agency to perform roof installation inspection services.
   2. Retain an independent, well established and qualified commercial inspection agency to perform roof installation inspection services. Submit qualifications of the Agency and its personnel to the OWNER'S REPRESENTATIVE for approval prior to retaining the agency. The OWNER'S REPRESENTATIVE reserves the right to request change in personnel or firm at any time.
   3. The CONTRACTOR is responsible for having the representative of the single-ply membrane roofing manufacturer on the site to inspect the completed installation.

1.4 SUBMITTALS

A. Furnish submittals for items that are identified in this SECTION by a different typeface and a bracketed code (e.g., *Item [L]*). Refer to SECTION 01340 for definition of codes for types of submittals and the administrative requirements governing submittal procedure. General submittal requirements pertaining to this SECTION are specified herein under this Article.

B. Applicator Qualification Statement: Submit list of the work experience of the applicator over the last five years which involved single-ply roofing systems comparable to that specified herein. Include evidence showing that the proposed applicator is certified by the selected single-ply roofing manufacturer for installing the single-ply roofing system.

C. Submit shop drawings for approval, showing the complete roof layout.

D. Submit for approval, roofing material manufacturers' written specifications for the system, materials, and methods of installation proposed for use. Such literature shall identify systems, each component, and shall certify compliance of each component with the applicable ASTM, FM, and UL Standards.

E. Roof Inspection Reports: Submit observation findings, investigations and recommendations concerning the status of roof installation; also indicate in the report if installation conform to specifications requirements.

F. Roofing Guarantee: Furnish to the OWNER in an approved form, warranting the roofing system, including base flashing, against failure or leakage of any kind for a period of <u>ten years</u> from the date of final acceptance of the Project. Cover in the guarantee all defects in materials and their method of installation which may cause system failure, except direct damage caused from hail, fire, tornado and physical damage caused from extraneous sources. Correctly and completely state in the Guarantee the size of roof area, type of roofing, location with respect to the overall building, Manufacturer's Specification Numbers, total lengths of flashing

guaranteed, and other pertinent facts concerning the roof construction. Repair or replace any or all portions of work which fails during guarantee period, promptly and at no cost to the OWNER, using methods and materials as specified for the initial construction. Repair work shall not be done on a patch basis. Temporary repairs done during inclement weather must be replaced with permanent work, complying with the initial construction specified, as soon as weather permits. Should the signer of the guarantee fail, or refuse, on reasonable notice (24 hours) to correct such failures as may occur, or to replace temporary repairs with permanent work, the OWNER may employ other means to correct the situation at the expense of the CONTRACTOR.

1.5 RECORD DOCUMENTS

A. Record Documents: Upon completion of roofing work, submit a written certificate stating that the completed roofing system including base flashing was furnished and installed per the roofing material manufacturers' procedures and additional requirements of this SECTION.

1.6 PRODUCT DELIVERY, STORAGE, AND HANDLING

A. Delivery Of Materials
   1. Deliver only specified and approved materials to the site. Deliver materials in original containers and packages with all seals and labels, including U.L. ASTM, and manufacturers labels intact for identification.
   2. Adhesives, solvents and other chemicals delivered in the form of cartons must have manufacturer's material identification label on each carton and accompanied by Material Safety Data. Maintain on-site records of Material Safety Data Sheets or OSHA-20 forms prepared by the manufacturer regarding material identification, handling and hazards. Copies of data sheets shall be made available to the OWNER upon request.

B. Storage Of Materials And Equipment
   1. Store materials at the site within temporary sheds or trailers; such facilities must be well sealed and kept at least 5 degF warmer than the exterior ambient temperature, to ensure that materials remain dry. Do not use wet, damp, frozen or damaged materials. Do not store more than one day's supply of materials on the roof at any time. While on the roof, stack materials on pallets, and completely cover with noncombustible waterproof tarpaulin whenever work is interrupted, or when there is precipitation of any kind. Securely tie covering to the pallets in such a way as to be completely weathertight. Plastic covers and shrinkwrap covers by the manufacturers are not acceptable for project site storage.

C. Handling Of Materials And Equipment
   1. Distribute materials temporarily stored on the roof to stay within the designated live-load limits of the roof construction. Provide ample bases under equipment and materials to distribute the weight to conform to these live-load limits. Do not store materials on, or transport materials across, completed roof areas.

1.7 PROJECT CONDITIONS

A. Environmental Requirements
   1. Climatic Conditions: Do not install materials in rain, cold, moisture, frost, snow or other climatic conditions which would incorporate moisture into the roof materials and prevent proper application and adhesion of adhesives or sealants. When the ambient air temperature is less than 45 degF, work will be permitted only upon written approval from the OWNER'S REPRESENTATIVE and OWNER, and then only after receipt of written assurance that materials will be installed properly and in full compliance with the SPECIFICATIONS under such conditions.
   2. Cold Weather Procedures: Submit proposed cold weather construction procedures and methods of protection in writing which will be initiated, provided and maintained when the ambient temperature falls below 45 degF, to ensure proper application of the work, per the requirements of this SECTION and the materials manufacturers.

B. Protection
   1. Provide 3/4 inch thick plywood on one inch polystyrene foamboard protection covering over all new roof areas when working from such roof surfaces. Schedule the installation and removal of plywood and polystyrene so as not to damage the installed roofing due to climatic or other conditions; that is, lay plywood and polystyrene only when working in the area and remove promptly so that plywood and polystyrene does not settle-in to the roofing and damage the membrane or insulation when being removed.

C. Personnel Protection
   1. Provide engineering controls and protective clothing and devices to limit respiratory exposure to and skin contact with adhesives, solvents and other harmful chemicals used to install single-ply roofing system.

D. Sequencing, Scheduling
   1. Phased construction of the single-ply roof system is not an acceptable construction method. Coordinate the Work of this SECTION with the installation of roof insulation so that the systems are properly installed with each other on a daily basis.
   2. Prior to start of the work, a project site meeting of all parties concerned, will be arranged, to review the specifications for all work included under this SECTION and to determine a complete understanding of the requirements and responsibilities relative to roof deck responsibility, scope of the work, storage and handling of materials, materials to be used, installation of materials and sequence of work and other matters affecting the construction so as to permit compliance with the intent of the CONTRACT DOCUMENTS.

E. Existing Roof
   1. The existing roofing of the present adjoining building is covered by a roofing bond or a roofing guarantee. Obtain from the OWNER all necessary information regarding this bond or guarantee and notify the Manufacturer of the original roofing material and/or the bonding company, or the guaranteeing Contractor, as the case may be, by letter before any work is done, so that these parties can protect their interests and make all inspections as

they see fit. Deliver a copy of the above mentioned notification letter to the OWNER'S REPRESENTATIVE.

2. Perform all new roofing in a manner that will maintain the above mentioned existing bond or guarantee for the remaining tenure of the warranty.
3. Do not use existing roof areas adjacent to new roof installation areas as storage or work staging area except to extent required in accomplishing interfacing work between new roofing and existing.
4. Provide 3/4 inch thick plywood and one inch polystyrene protection covering over existing roofing when working from such roof surfaces.

PART 2 PRODUCTS

2.1 MATERIALS

A. PVC Sheet Membrane Roofing

1. *PVC Sheet Membrane Roofing System [D, G, P, R, T]*: Single-ply polyvinyl chloride (PVC) thermoplastic sheet fully-adhered, non-ballasted roofing system:
   a. GenFlex Roofing Systems "RM Fully Adhered".
   b. Johns Manville "UltraGard PVC Adhered Roofing System".
   c. Sarnafill Inc., "Sarnafil PVC Adhered System".
2. PVC Thermoplastic Sheet: Polyester – reinforced, reflective (SRI 78 minimum) white colored, uniform, flexible sheet formed from UV-resistant polyvinyl chloride (PVC) with plasticizers and modifiers, complying with ASTM D4434, Type III, 60 mils thick.
3. Bonding Adhesive: Contact Adhesive as furnished by membrane manufacturer, compatible with and bondable to all horizontal and vertical surfaces to which membrane is to be bonded.
4. Seam Sealer: Seam Sealer for sealing exposed edge of lap splices as furnished by membrane manufacturer.
5. Prefabricated Accessories: "One Piece PVC Boot Flashing" as furnished by membrane manufacturer, of PVC sheet material, for flashing items such as pipes, conduit, and equipment supports which project through the membrane, complete with stainless steel clamp bands.
6. Night Cut-Off Seal: As provided by membrane manufacturer.
7. Pressure Bars: Type 302 or 304 stainless steel, 1/8 inch x 1 inch size, with stainless steel fasteners, for securing sheet membrane and flashing terminations to vertical surfaces where indicated on DRAWINGS, where wood nailers are not provided.
8. Membrane Anchors: Corrosion-resistant coated metal plates and screws as furnished or recommended by membrane manufacturer, for securing terminating edges of PVC roof membrane and flashings to substrate, per FM 4470 corrosion-resistant provisions.
9. PVC Sheet Flashing: Membrane manufacturer's standard PVC membrane sheet, of same material, type, thickness and color as roofing sheet.
10. All Other Accessories: As provided or recommended by membrane manufacturer for their system specified, as required for a complete and watertight installation.
11. Seam Welders: Electric hot-air welding equipment recommended by roofing manufacturer.

B. Walkway Treads
   1. Walkway Treads: Factory-formed PVC, nonporous, heavy-duty, slip-resistant, surface-textured walkway pads as standard with roofing system manufacturer.

PART 3 EXECUTION

3.1 PREPARATION

A. General
   1. Carefully inspect all surfaces upon which WORK is to be applied. The installation of any material will be considered an acceptance of the surfaces covered. Failure of WORK because of subsurface or surface defects will require removal of WORK which becomes defective, and replacing with WORK conforming to the SPECIFICATIONS at no additional cost to the CONTRACT.
   2. Apply materials over smooth, dry surfaces that are free from dirt, debris and other coatings that prevent adhesion of materials to be applied. Have all temporary structures, tools, equipment, loose rubbish and debris removed from areas to be covered. Do not apply materials over wet, damp, frosty or frozen surfaces. Do not apply materials when the effects of low temperature or excessive moisture would prevent bonding of materials, or would incorporate moisture into the system component materials.

B. Preparation Of Existing Roofing
   1. Carefully remove and dispose of existing roofing, roof insulation, and base flashing to extent shown and as required to install new insulation, roofing and roof accessories. Do not remove more existing roofing than can be replaced with new completed roofing system the same day. Protect exposed removal areas from inclement weather conditions per SECTION 01100 and with cut-off strips as specified herein. Remove existing roofing and roofing insulation system in sections using an insulation cutter and hand tools which will not damage existing roof deck and adjacent roofing to remain. Do not use axes for removal work.

3.2 INSTALLATION

A. PVC Single-Ply Roofing System
   1. Perform all work per PVC single-ply roofing material manufacturer's printed recommendations for the specified roofing system as modified by these SPECIFICATIONS, and per approved SHOP DRAWINGS. Use experienced workmen only. Plan and conduct the WORK so that each area of the roof system begun one day is completed the same day, including membrane, base flashing and roof penetration flashing. Where entire roof area cannot be completed in a days operations, install temporary roof cut-off strips as specified and the insulation strips furnished under SECTION 07220.
   2. PVC Roofing Sheet:
      a. Position membrane without stretching, and allow minimum 30 minutes time for membrane to relax before fastening.
      b. Terminate and mechanically-fasten sheet at interrupting vertical surfaces such as parapets, curbs, etc.

c. At terminating edges of roofing sheet (such as at parapets) where recommended by the roofing manufacturer, provide wood nailing strips and mechanically fasten the strips in place per SECTION 06100.

d. Lap ends and edges of sheets a minimum of 3 inches to allow for a minimum 1-1/2 inch continuous heat-weld area. Position membrane sheets in a manner to facilitate the flow of water over the field seams. After carefully positioning several sheets of the membrane, one half of the first sheet width shall be folded back to expose the underside. Apply 100% coverage of adhesive to the substrate and the membrane; do not apply adhesive to the lap splice area to be heat welded. Roll the adhesive coated membrane into the adhesive coated substrate, avoiding wrinkles; brush down the bonded half of the sheet with a push broom to achieve maximum contact. Fold back the unbonded half of the sheet and repeat the bonding procedure. Roll the bonded surfaces with a padded water-filled lawn roller to promote 100% adhesion. On each successive sheet of membrane, the sheet alignment and lapping, adhesive application, adhering and rolling procedures shall be repeated. Perimeter of membrane shall be mechanically attached at each roof level, parapet, curb, expansion joint, and roof penetration.

e. Both sheet membrane and flashing seams shall be hot air welded only. No adhesive shall be present in the lapped area. Using an approved automatic heat welding machine or hand held heat gun and roller, continuously weld a 1-1/2 inch wide seam. Manually check all welded seams for voids or seal deficiencies by probing after the seam is cooled; reweld all defective seam areas. Apply a bead of seam sealer sealant along all lap splice edges.

3. Flashing:

a. Install PVC sheet base flashing system at perimeter of roof areas and at vertical surfaces which intersect or penetrate the sheet membrane. Set in bonding adhesive on horizontal and vertical surfaces and lap adjoining sheets of flashing per manufacturer's directions and heat weld laps and seal lap edge with bead of seam sealer.

b. Provide prefabricated PVC collar flashing at pipes, conduits, platform supports, etc. which penetrate the membrane; secure around items with stainless steel clamp bands, and calk top edge with sealant.

c. Splice flashings with main sheet by lapping over same and heat welding in accordance with manufacturer's instructions. Apply bead of seam sealer along terminating edge of flashing at roof membrane sheet.

d. At parapets, walls and curbs, start membrane flashing at heights shown and continue down the vertical surface and lap 6 inches out over the roof sheet membrane (over mechanical fasteners) as recommended by the manufacturer. Secure top edge of flashing as follows:

1) Where wood nailers are shown, secure to nailers with roofing manufacturer's recommended fasteners and spacing.

2) Where wood nailers are not provided, secure edges of flashing with stainless steel pressure bars, fastened through the flashing and into the substrate with roofing manufacturer's recommended fasteners and spacing. Apply bead of seam sealer along edges of counterflashing and pressure bars.

4. Temporary Protection:
    a. Install no more roofing on one day than can be completed the same day.
    b. At end of each work day in which installation of the membrane is not complete and if roofing operation is likely to be interrupted by rain, protect insulation and seal loose edge of membrane by installation of water cut-offs as recommended by roofing manufacturer before stopping work. At no time shall insulation and loose edge of membrane be left unprotected by water cut-offs overnight. Receive and install metal roof deck flute insulation strips, furnished under SECTION 07220, under loose edge of membrane; set strips in sealant and seal membrane to strips with same as required to provide a watertight cut-off.
    c. Install temporary water cut-offs in such a manner that rainwater or condensation cannot get beneath the membrane or otherwise come in contact with the insulation. After loose edge has been sealed, weight it down under temporary ballast as recommended by manufacturer of the elastomeric sheet membrane system in order to prevent lifting of the membrane by the wind.
    d. Remove water cut-off material with flute insulation strips completely when work is resumed, and legally dispose of such materials off the Project site.
5. Perimeter Membrane Securement:
    a. All membrane shall be mechanically-fastened maximum 12 inches O.C. at each roof level perimeter, parapet, angle change, curb, expansion joint and similar penetration, according to roofing manufacturer's standard details.
    b. Provide mechanical fastening around every penetration in the roof.

B. Walkway Treads
1. Install walkway treads in the locations and to the extent shown. Install treads after the roof membrane installation is completed. When placing treads, provide 2 inch gap between each plank to allow roof water to flow to drains. Secure treads to membrane per manufacturer's directions.

3.3 FIELD QUALITY CONTROL

A. All welded seams shall be manually checked for voids or seal deficiencies by probing the entire seam area with a blunt-ended probe after the seam has cooled; all openings or "fishmouths" shall be repaired with a hand-held hot air tool and with a roller.
1. On-site evaluation by destructive testing shall be made three times a day, at locations directed or approved by the OWNER's REPRESENTATIVE, by taking two inch wide cross-section samples through completed seams; correct welds shall display shearing of the membrane prior to separation of the weld. Repair the test areas after tests are made.

B. After completion of roofing construction, the OWNER will require a representative of the elastomeric sheet membrane manufacturer and a representative of the installation inspection agency to meet with the OWNER'S REPRESENTATIVE to inspect the completed installation, to confirm that the proper materials and workmanship have been provided.

C. Should the inspection disclose any deficiency of materials or workmanship, apply additional materials or remove and replace the roofing system, as determined by the OWNER'S

REPRESENTATIVE, at no additional cost to the OWNER, to produce the construction as specified.

END OF SECTION

Revision History	
Date	**Rev. No.**
A	0
B	0
C	0
D	0
E	0
F	0
02-19-09	0

DS/djo
C:\d\timsdatasf\brookhaven_national_laboratory\sf070003\200-projexec\280-spec\07533.doc

THIS PAGE INTENTIONALLY LEFT BLANK

SECTION 07600

ROOF SHEET METAL AND FLASHING

PART 1 GENERAL

1.1 SUMMARY

A. Section Includes: Roof sheet metal and flashing as shown or specified, and as required to provide a complete installation.

B. Related Work Specified in Other Sections
   1. Metal flashings in conjunction with metal siding, including coping at top of metal siding, and metal flashing at bottom of metal siding (except directly above roofing) - Division 7.
   2. Prefabricated metal roof accessories - Division 7.
   3. PVC roofing and coated roof flashings – Division 7.

1.2 SUBMITTALS

A. Furnish submittals for items that are identified in this Section by a different typeface and a bracketed code (e.g., *Item [L]*). Refer to Division 1 General Requirements for definition of codes for types of submittals and the administrative requirements governing submittal procedure. General submittal requirements pertaining to this Section are specified herein under this Article.

B. Fabricated Items: Submit shop drawings to show all fabricated items, including thicknesses and dimensions of all parts and methods of assembling, joining, seaming and securing of roof sheet metal and flashing work; give information necessary for adjacent and related work.

C. Standard Items: Submit product data for standard manufactured and catalogue items.

D. Aluminum Samples: Submit for color, texture and finish of exposed surfaces. Show extremes of variation of color and of texture, due to normal manufacturing tolerances.

E. Roof Sheet Metal and Flashing Guarantee: Furnish in an approved form, warranting roof sheet metal and flashing work against failure or leakage of any kind for a period of 2 years from date of final acceptance of the project, covering all defects in materials and workmanship. State that all sheet metal work that becomes defective or leaks, during the guarantee period, will be repaired, promptly, to the requirements of these Specifications and that covering construction will be removed and replaced as required to perform the repairing or replacing work, all at no cost to the Owner.

1.3 QUALITY ASSURANCE

A. Sheet Metal Flashing and Trim Standard: Where not specifically detailed or specified, comply with SMACNA's "Architectural Sheet Metal Manual". Conform to dimensions and profiles recommended unless more stringent requirements are indicated.

PART 2 PRODUCTS

2.1 GALVANIZED STEEL

A. Galvanized Steel Sheet: Mill phosphatized, minimized spangle, zinc coating designation G90 per ASTM A 525.
   1. Primer Finish: Shop-applied prime coat of zinc-rich, rust-inhibitive priming paint both sides.
   2. Polyvinylidene Fluoride Finish: Factory-applied baked-on polyvinylidene fluoride resin finish containing not less than 70% Kynar 500 or Hylar 5000 resin, with minimum total dry film thickness of 1.0 mil (0.2 mil primer and 0.8 mil finish), in standard color as selected per approved samples.

2.2 ALUMINUM

A. Sheet: Per ASTM B 209, alloy 3003-H14, unless other alloy and temper are approved.
   1. Aluminum Association AA-M12C22A31 (clear etch and anodize).
   2. Aluminum Association AA-C22R10 (etch and lacquer).
   3. *Polyvinylidene Fluoride Finish [S]*: Factory-applied baked-on polyvinylidene fluoride resin finish containing not less than 70% Kynar 500 or Hylar 5000 resin, with minimum total dry film thickness of 1.0 mil (0.2 primer and 0.8 finish), in standard color as selected per approved samples.

B. *Color-Anodized Aluminum Sheet [S]*: Of correct alloy to produce the specified finish and of temper suitable for the Work, with color-anodized finish per Aluminum Association AA-M12C22A34 in the following color to match siding.

C. Extrusion: Minimum 1/8 inch thick, of profiles shown, Alloy 6063, Temper T42, unless other alloy and temper are approved.
   1. *Polyvinylidene Fluoride Finish [S]*: Factory-applied baked-on polyvinylidene fluoride resin finish containing not less than 70% Kynar 500 or Hylar 5000 resin, with minimum total dry film thickness of 1.0 mil (0.2 primer and 0.8 finish), in standard color as selected per approved samples.

D. *Color-Anodized Aluminum Extrusions [S]*: Minimum 1/8 inch thick, of profiles shown, of correct alloy to produce the specified finish and of temper suitable for the work, with color-anodized finish per Aluminum Association AA-M12C22A34 in color to match existing building.

E. Coat with bituminous paint, all aluminum surfaces in contact with dissimilar metals, masonry, mortar or concrete.

2.3 STAINLESS STEEL

A. Stainless Steel Sheet or Strip: AISI Type 302 or 304 alloy fully annealed to dead-soft temper, 2D finish, per ASTM A 240.

2.4 ZINC COATED STEEL SHEET

A. Zinc-Coated (Galvanized) Steel Sheet: Per ASTM A653, G90 coating designation, structural quality, mil phosphatized for field painting.

2.5 FASTENERS

A. Nails: Large head, barbed shank of No. 12 gage minimum with sharp point and of length to develop holding power for service intended.

B. Screws: Large oval head, for securement in wood or metal as required, of length to develop holding power for service intended.

C. Machine Bolts: With expansive sleeves for fastening in concrete or masonry, with nuts for fastening to metal framing or wood. Where bolt head is exposed to view, provide snap-on or integral colored plastic head and colored combination metal - neoprene washer to match the color finish of the flashing.

D. Fasteners: Furnish for use with specific sheet metals as follows:
   1. For Galvanized Steel: Galvanized steel, cadmium-plated steel, or stainless steel of 304 or 302 alloy.
   2. For Aluminum: Hard aluminum alloy or stainless steel of 304 or 302 alloy.

2.6 MISCELLANEOUS MATERIALS

A. General: Provide protective coatings, fasteners, solder, dissimilar metal protection, sealants, and other items as required for watertight installation.

B. Felt Underlayment: Asphalt-saturated organic felt per ASTM D 226, Type II (No. 30), nonperforated.

C. Sealing Tape: Polyisobutylene compound sealing tape with 100% solids and pressure sensitive release-paper backing. Provide nontoxic, nonstaining permanent elastic tape.

D. Elastomeric Sealant: Elastomeric polyurethane polymer sealant per ASTM C 920, as required for watertight installation.

E. Butyl Sealant: Single-component, solvent-release butyl rubber sealant per ASTM C 1311, for use in joints with limited movement .

F. Epoxy Seam Sealer: Aluminum seam-cementing compound, 2-part, noncorrosive, as recommended by manufacturer for exterior nonmoving joints.

G. Bituminous Coating: SSPC-Paint 12, cold-applied asphalt mastic, compounded for 15-mil (0.4-mm) dry film thickness per coat.

2.7 MINIMUM DIMENSIONS AND THICKNESSES

A. General
1. Provide sheet metal in not less than the minimum thicknesses and weights specified in the following paragraphs.
2. Provide zinc alloy steel of same gage as galvanized steel.

2.8 MINIMUM GAGES

A. Galvanized Steel: Use minimum .0276 inch for all items except:
1. Use .0336 inch gage for continuous cleats.
2. Use ,0396 inch gage for roof edge strips, 1-1/4 inches wide.
3. Use .0336 inch gage for fascias over 5 inches high.
4. Use .0396 inch gage for rain conductor downspout and gutter hangers.

B. Stainless Steel: Use minimum .015 inch thick for all items except:
1. Use .018 inch thick for continuous cleats.
2. Use .025 inch thick for roof edge strips, 1-1/4 inches wide.
3. Use .018 inch thick for fascias over 5 inches high.
4. Use .037 inch thick for rain conductor downspout and gutter hangers.

C. Aluminum: Use minimum .032 inch thick for all items except:
1. Use .050 inch thick for continuous cleats.
2. Use .050 inch thick for roof edge strips, 1-1/4 inches wide.
3. Use .050 inch thick for fascias over 5 inches high.
4. Use .080 inch thick for rain conductor downspout and gutter hangers, and use .040 inch thick for splash pans.

2.9 FABRICATION

A. General: Fabricate metal trim and flashing per the recommendations in SMACNA's "Architectural Sheet Metal Manual". Where possible, shop fabricate metal trim and flashings. Verify via accurate field measurements prior to flashing and trim shop fabrication.

B. Fabricate metal flashing and trim in gage or weight as specified or as indicated on the Drawings.
   1. Aluminum Seams: Fabricate nonmoving seams via flat-lock interlocking joints. Seal with epoxy type sealant.
   2. Non-aluminum Seams: Fabricate nonmoving seams via interlocking flat-lock joints. Tin edges to be soldered.

C. Sealed Joints: Seal movable, non-expandable metal joints with elastomeric sealant per recommendations of SMACNA.

D. Exposed to View Joints: Provide concealed type fasteners at all exposed flashings and trim where possible unless otherwise indicated or detailed.

E. Provide cleats and accessories from same metal or from a, noncorrosive compatible metal. Thickness shall be not less than that of base flashing metal being secured.

F. Soldering: Tin all edges of sheet metal to be soldered, on both sides, for a minimum width of 1-1/2 inch. Sweat all soldered joints full and remove all soldering solutions at completion. Butter joints to be sealed with roofing mastic, full area of overlap, using sufficient amount of mastic so that joint is filled, but not overflowing. Do not solder aluminum; aluminum greater than .040 inch thick can be welded.

PART 3 EXECUTION

3.1 GENERAL

A. Do not fasten sheet metal through exposed surfaces of sheet except where so approved and where other methods of fastening are impractical. Seal exposed heads of nails or screws watertight with sealant colored to blend with surrounding metal or clear where exposed to view from ground or adjacent occupied area; roofing mastic where no apparent visual exposure is anticipated. Solder all heads of exposed nails in all sheet metal materials except aluminum.

B. Locate expansion joints so as to prevent defects or damage due to thermal movement while still remaining watertight.

C. Turn out the stiffened free edge of horizontal runs of flashing at a 45 degree angle to form drips and to engage continuous cleats behind same.

3.2 COPING

A. Provide extruded aluminum coping of profile detailed and secure in place with concealed continuous cleats to allow for thermal movement. Install joint covers to maintain watertight installation.
   1. Provide concealed joint covers.

B. Provide sheet aluminum coping of profile shown, to extend a minimum of 4 inches down over the exposed wall surface and a minimum of 3 inches over the base flashing, except where greater dimensions are shown. Stiffen the free edges and bend out to form a drip. Provide a continuous, concealed slip-type cleat and install the coping unit over the parapet wall and engage the coping around the cleat on each side of the parapet. Install concealed joint covers at all joints, centered on joint and lapped under adjacent sections. Provide sealant at all joints to make weathertight.

3.3 CAP FLASHINGS

A. Form cap flashings to provide spring action of the free edge against the base flashing and secure free edge with concealed continuous cleats. Extend cap flashing over base flashing a minimum of 3 inches.

B. Where cap flashings are secured directly into masonry joints or flashing groove in concrete, form the flashing with a 1-1/2 inches wide horizontal leg with 1/4 inches turn-up at the back and insert into horizontal joint. Secure the flashing in place by forcing metal wedges of same material or lead wedges, into the joint at 18 inches on center and fill the joint with sealant.

C. Where cap flashings are secured into prefabricated flashing receivers, furnish 2-piece flashing assembly shaped to interlock with each other. Furnish the receiver portion for embedment in the wall. Install the exposed flashing portion into the receiver, snapping it into place to secure it in the receiver and to provide spring action of the flashing against the base flashing.

D. Where cap flashings are secured to walls with no provision for receiving the cap flashing, secure the cap flashing with continuous pressure bars. Secure pressure bar to the wall by bolting at 12 inches centers through the flashing, with flashing extending above top of pressure bar a minimum of 1/2 inch. Turn the top of the flashing, above the pressure bar, out at a 45 degree angle and fill the space with sealant.
   1. Where cap flashings are secured to wood nailers and concealed cleat fastening is not possible, face nail the flashing in place at 3 inches on center.
   2. Provide cap flashings on top edge of new roof curbs as shown; extend down inside of curbs. Where indicated, provide sheet metal closure liners inside new field-fabricated roof curbs. Provide sheet metal covering over temporary plywood covers at curbs for future roof-mounted equipment such as fans, etc.

3.4 ROOF PENETRATION COLLAR FLASHINGS

A. Provide sheet metal collar flashings around roof penetrating items in built-up roofing such as pipes, conduits, equipment support legs, equipment platform legs, etc., secured with stainless steel clamping band and calked with sealant around top edge of outer collar. Unless shown otherwise, provide 2-piece collar flashings consisting of an inner collar with 6 inch wide roof flange for stripping into the built-up roofing and an outer collar extending down over the inner collar and having top edge flanged out 45 degrees and clamped above the top edge of the inner collar.

3.5 CLEANING AND PROTECTION

A. Clean all exposed flashing surfaces including excess sealants and solder. Neutralize flux materials.

B. Replace any damaged flashings due to construction operations.

C. Touch up any scratched or damaged surfaces with paint to match existing adjacent new metal flashing and trim surfaces.

END OF SECTION

Revision History	
Date	**Rev. No.**
A	0
B	0
C	0
D	0
E	0
F	0
02-19-09	0

DS/djo
C:\d\timsdatasf\brookhaven_national_laboratory\sf070003\200-projexec\280-spec\07600.doc

THIS PAGE INTENTIONALLY LEFT BLANK

SECTION 07720

ROOF ACCESSORIES

PART 1 GENERAL

1.1 SUMMARY

A. Section Includes
   1. Provide roof accessories as shown or specified, and as required for a complete installation.

B. Related Work Specified in Other Sections
   1. Steel supports and gratings – Division 5.
   2. Roof curb flashing and mastic sealant on curb – Division 7.

1.2 PERFORMANCE REQUIREMENTS

A. Design Criteria
   1. Fabricate and install roof accessories to withstand wind pressure loading of not less than 30 PSF without damage or deformation and to remain watertight.
   2. The top surface of curbs shall be flat and horizontally positioned no matter what slope roof used.
   3. All curbs for pieces of equipment shall be coordinated with specific piece of equipment to insure proper placement, proper weight capacity and size; coordinate with Mechanical Contractor.

B. Standards: Comply with the following:
   1. SMACNA's "Architectural Sheet Metal Manual" details for fabrication of units, including flanges and cap flashing to coordinate with type of roofing indicated.
   2. NRCA's "Roofing and Waterproofing Manual" details for installing units.

1.3 SUBMITTALS

A. Furnish submittals for items that are identified in this Section by a different typeface and a bracketed code (e.g., *Item [L]*). Refer to Division 1,General Requirements for definition of codes for types of submittals and the administrative requirements governing submittal procedure. General submittal requirements pertaining to this Section are specified under this Article.

B. Product Data: For each roof accessory specified.

C. Shop Drawings: Include all roof accessory installation details including blockway, support, connections and flashings.

1.4 PROJECT CONDITIONS

A. Sequencing, Scheduling
   1. Install roof accessories before roof insulation and roofing system is installed.

1.5 DELIVERY, STORAGE AND HANDLING

A. Wrap, carton, and crate, as required, to provide physical and climatic protection during loading, shipping and job site storage and handling.

B. Deliver packaged materials to the project site in the manufacturer's original, unopened containers which bear intact, legible and visible labels that identify the manufacturer's name and brand name, the contents, grade and type.

C. Upon delivery, immediately inspect shipments to assure their compliance with the requirements of the Contract Documents and approved submittals, and that products are complete, undamaged and adequately protected. Immediately report damaged, missing, or defective items. Remove broken, damaged or unlabeled items from the site immediately.

D. Store products in accordance with manufacturer's instructions with seals and labels intact, legible, and visible. Store products in a manner to prevent to prevent damage, soiling, theft, deterioration and contamination. Marred surfaces, cracked, checked spilt or warped materials will be rejected, Store materials subject to damage by climatic conditions in weathertight enclosures. Maintain temperature and humidity within the ranges required or recommended by the manufacturer.

E. Repair or clean items that have been damaged or soiled that can be restored to an "as new" condition at not cost to the Owner. The Owner’s Representative shall be the judge of the effectiveness of remedial measures. Additional time or expense required to secure replacements and to make repairs will not be considered by the Owner’s Representative to justify and extension in the Contract time of completion or an increase in the Contract amount.

PART 2 PRODUCTS

2.1 FABRICATION AND MANUFACTURE

A. Prefabricated Roof Curbs
   1. *Prefabricated Roof Curbs [D]:* Insulated, minimum 18 gage galvanized steel shell with 22 gage galvanized steel liner full depth of curb and roof deck construction, pressure-preservative treated overhanging (1 inch exterior overhang) 1 1/2” thick, wood top nailers, and shop-applied rust-inhibiting primer. Provide curb units minimum of 12 inch overall height unless noted otherwise. Verify actual curb sizes required with certified manufacturer’s equipment drawings. Modify the following to include overhanging wood top nailers:
      a. Custom Curb, Inc. “CRC-3”
      b. Pate Co. “pc-2b”

c. Roof Products Inc. “RPC-3”.
d. Thybar Corp. “ThyCurb TC-3”

2. Insulation: Manufacturer’s standard rigid or semirigid glass-fiber board of thickness indicated.
3. Wood Nailers: Softwood lumber, pressure treated with waterborne preservatives for aboveground use, complying with AWPA C2; not less than 1-1/2 inches (38 mm) thick.

B. Prefabricated Equipment Supports

1. *Prefabricated Equipment Supports [D]:* Insulated of minimum 18 gage galvanized steel with pressure-preservative treated overhanging (1 inch overhang each side) 1 1/2” thick, wood top nailers, and shop-applied rust-inhibiting primer. Provide equipment support units of 12 inch overall height unless noted otherwise. Verify actual equipment support sizes required with certified manufacturer’s equipment drawings. Modify the following to include overhanging wood top nailers.
   a. Custom Curb, Inc. “CES-3”
   b. Pate Co. “es-2b”
   c. Roof Products Inc. “RPES”
   d. Thybar Corp. “TEMS-3”
2. Insulation: Manufacturer’s standard rigid or semirigid glass-fiber board of thickness indicated.
3. Wood Nailers: Softwood lumber, pressure treated with waterborne preservatives for aboveground use, complying with AWPA C2; not less than 1-1/2 inches (38 mm) thick.

C. Fasteners

1. Expansion Bolts:
   a. Wej-It Expansion Products, Inc. “Wej-It Concrete Anchors”
   b. Rawlplug Co., Inc. “Rawl Anchors” or “Rawl Hammer Sets”
   c. Hilti Co. “HDI Internally Threaded Expansion Anchor”
   d. Powers Fasteners, Inc. “Wedge-Bolt”
2. Match metal fasteners with type of metal being fastened or utilize non-magnetic, stainless steel, or other non-corrosive steel type.

PART 3 EXECUTION

3.1 INSTALLATION

A. General

1. Do not subject units to construction abuse or undue impact during the installation. Remove damaged or defective units and replace with new units, except that minor finish abrasions and slight damage that does not impair strength or function of the unit may be repaired and touched up, as approved by the Owner’s Representative.

2. Install roof accessories units straight and true, with plumb vertical surfaces and upper support contact surface horizontal regardless of the roof slope. Secure units to roof deck prior to installation of insulation.
   a. Secure units to metal deck by welding, incorporating 3/4 inch long fillet welds at 12 inches on center around the perimeter of the unit, and with not less than 2 welds per side.
   b. Secure units to concrete deck using specified fasteners of minimum 1/2 inch diameter, of length to embed 3 inches into substrate, spaced at 24 inches on center maximum and with not less than 2 bolts per side.
3. Coordinate installation with other construction including decking and roofing to provide weathertight installation.
4. Install roof accessory tiles in accordance with the NRCA's "Roofing and Waterproofing Manual".
5. Separation: Provide permanent separation between dissimilar metals via bituminous coating.
6. Cap Flashing: Install cap flashing to provide weathertight seal and provide mastic sealant at overlapped flashings. Seal overlap with thick bead of mastic sealant.

3.2 TOUCHUP AND CLEANING

A. Touch up damaged surfaces to match new adjacent surfaces. Clean all roof accessories and assemblies in accordance with manufacturer's specifications.

B. Verify that all accessories are permanently secured to resist anticipated lateral thermal stresses.

END OF SECTION

Revision History	
Date	**Rev. No.**
A	0
B	0
C	0
D	0
E	0
F	0
02-19-09	0

DS/djo
C:\d\timsdatasf\brookhaven_national_laboratory\sf070003\200-projexec\280-spec\07720.doc

SECTION 07840

FIRESTOPPING

PART 1 GENERAL

1.1 SUMMARY

A. Section includes the filling of voids and cavities around wall and perimeter edges of rated walls and floors with firestopping and smoke sealing materials to maintain the required fire-rated condition of substrate.

B. Related Work Specified in Other Sections
   1. Concrete – Division 3.
   2. Masonry – Division 4.
   3. Sealants and Calking - Division 7.
   4. Gypsum Board – Division 9.
   5. Mechanical Work - Division 15.
   6. Electrical Work - Division 16.

1.2 PERFORMANCE REQUIREMENTS

A. Fire stopping materials shall be UL tested or other test acceptable, such as Omega Point Laboratories, to authorities having jurisdiction and classified as “Through-Penetration System” and “Fill, Void or Cavity Material”. Material shall provide fire-rating equal to that of the floor or wall construction being penetrated.

B. Test Requirements: ASTM E 814, "Standard Method of Fire Tests of Through Penetration Fire Stops".

C. Test Requirements: UL 1479, "Fire Tests of Through-Penetration Firestops".

D. Test Requirements: UL 2079, "Tests for Fire Resistance of Building Joint Systems".

E. Underwriters Laboratories (UL) of Northbrook, IL publishes tested systems in their "FIRE RESISTANCE DIRECTORY" that is updated annually.
   1. UL Fire Resistance Directory:
      a. Firestop Devices (XHJI).
      b. Fire Resistance Ratings (BXRH).
      c. Through-Penetration Firestop Systems (XHEZ).
      d. Fill, Voids or Cavity Material (XHHW).
      e. Forming Materials (XHKU).
      f. Joint Systems (XHBN).
      g. Perimeter Fire Containment Systems (XHDG).
      h. Batts and Blankets (BKNV)
      i. Mineral and Fiber Boards (BQXR)

2. Alternate Systems: "Omega Point Laboratories Directory" (updated annually).

F. Test Requirements: ASTM E 1996, "Standard Test Method for Fire Resistive Joint Systems".

G. Test Requirements: ASTM E 2307, "Standard Test Method for Determining Fire Resistance of Perimeter Fire Barrier Systems Using Intermediate-Scale, Multi-story Test Apparatus".

H. Inspection Requirements: ASTM E 2174, "Standard Practice for On-site Inspection of Installed Fire Stops".

I. ASTM E 84, "Standard Test Method for Surface Burning Characteristics of Building Materials".

J. ASTM C 553, "Standard Specification for Mineral Fiber".

K. International Firestop Council Guidelines for Evaluating Firestop Systems Engineering Judgements", Blanket Thermal Insulation for Commercial and Industrial Applications.

L. Building Codes:
   1. 2003 International Building Code.
   2. 2003 International Fire Code.

M. NFPA 101 – Life Safety Code.

N. NFPA 70 – National Electric Code.

O. Provide a firestop system with a "F" Rating as determined by UL 1479 or ASTM E814, which is equal to the fire rating of the construction being penetrated.

P. Provide a firestop system with an Assembly Rating as determined by UL 2079, which is equal to the fire rating of the construction joint assembly.

1.3 SUBMITTALS

A. Furnish submittals for items that are identified in this Section by a different typeface and a bracketed code (e.g., *Item [L]*). Refer to Division 1 for definition of codes for types of submittals and the administrative requirements governing submittal procedure. General submittal requirements pertaining to this Section are specified herein under this Article.

B. Submit product data where specified, describing composition, together with color chart and recommendations or directions for surface preparation, material preparation and material installation. Include “F” and “T” ratings for each penetration condition. UL – Classified Systems specified in Paragraph 3.3. “Through-Penetration Firestop System Schedule” have been selected based on one manufacturer. Submit alternative UL-Classified Systems Numbers for substitute manufacturer per General Conditions. Submit MSDS sheets for any hazardous products.

C. Guarantee: Submit guarantee attesting that firestopping material will remain in a serviceable, elastic, adhesive condition for a period of three years from date of final acceptance of the Project, with provision to make good, at no cost to the Owner, imperfections which may develop during the guarantee period, as well as any damage to other work caused by such imperfections or by their repair.

1.4 INSTALLER QUALIFICATIONS

A. Engage an experienced installer who is certified, licensed, or otherwise qualified by the firestopping manufacturer as having been provided the necessary training to install manufacturer's products per specified requirements. A supplier's willingness to sell its firestopping products to the Contractor or to an Installer engaged by the Contractor does not in itself confer qualification of the Installer.

1.5 PRODUCT DELIVERY, STORAGE AND MATERIALS

A. Wrap, carton, and crate as required to provide physical and climatic protection during loading, shipping and job site storage and handling.

B. Deliver packaged materials to the project site in the manufacturer's original, unopened containers which bear intact, legible and visible labels that identify the manufacturer's name and brand name, the contents, grade, type and UL label, where applicable.

C. Upon delivery, immediately inspect shipments to assure their compliance with the requirements of the Contract Documents and approved submittals, and that products are complete, undamaged and adequately protected. Immediately report damaged, missing, or defective items. Remove broken, damaged or unlabeled items from the site immediately.

D. Store products in accordance with manufacturer's instructions with seals and labels intact, legible, and visible. Store products in a manner to prevent damage, soiling, theft, deterioration and contamination. Damaged materials will be rejected. Store materials subject to damage by climatic conditions in weathertight enclosures. Maintain temperature and humidity within the ranges required or recommended by the manufacturer.

E. Repair items that have been damaged or displaced that can be restored to an "as new" condition at no cost to the Owner. Additional time or expenses required to secure replacements and to make repairs will not be considered to justify an extension in the Contract time of completion or an increase in the Contract amount.

1.6 ENVIRONMENTAL REQUIREMENTS

A. Do not install sealant or putty compounds when ambient air temperature exceeds that of the manufacturer's recommended installation limitations or when recesses are wet or damp; provide temporary heated enclosures to comply with this requirement.

B. Protect adjacent exposed finished surfaces from damage, by masking or other approved means, prior to performing work. Remove protection when no longer required and clean adjacent, exposed surfaces of any sealant or putty compound deposited upon such surfaces.

1.7 PROJECT SITE CONDITIONS

A. Product Restrictions
   1. Silicone based products are prohibited on the Project.

B. Verify existing conditions and substrates before starting work. Correct unsatisfactory conditions before proceeding.

C. During installation, provide masking and drop cloths to prevent firestopping materials from contaminating any adjacent surfaces.

D. Do not use materials that contain flammable solvents.

E. Schedule installation of firestopping after completion of penetrating item installation but prior to covering or concealing of openings.

F. Weather conditions: Do not proceed with installation of firestop materials when temperatures exceed the manufacturer's recommended limitations for installation printed on product label and product data sheet.

PART 2 PRODUCTS

2.1 FIRESTOPPING GENERAL

A. Provide firestopping composed of components that are compatible with each other, the substrates forming openings, and the items, if any, penetrating the firestopping manufacturer based on testing and field experience.

B. Provide components for each firestopping system that are needed to install fill material. Use only components specified by the firestopping manufacturer and approved by the qualified testing agency for the designated fire-resistance-rated systems.

C. Firestopping Materials are either "cast-in-place" (integral with concrete placement) or "post installed". Provide cast-in-place firestop devices prior to concrete placement.

D. Subject to compliance with through penetration firestop systems (XHEZ), joinsystems (XHBN), and perimeter firestop systems (XHDG) listed Volume 2 of the UL Fire Resistance Directory; provide products of the following manufacturers as identified below in the product sections.

2.2 FORMED IN PLACE

A. *Sealant [P,T]*: One-part, gun grade, non-sag material, tested and rated per ASTM E814.
   1. Bio Fireshield Inc. “Biotherm 100/200SL”.
   2. Hilti “FS 601S Elastomeric Firestop Sealant”.
   3. Nelson Fire Stop “CLK”.
   4. 3M “Fire Barrier CP25WB + Caulk”.
   5. Tremco “Tremstop Acrylic”.
   6. Hilti "FS-One High Performance Intumescent Firestop Sealant".

B. *Putty [P,T]*: One-part, hand pliable, intumescent or endothermic material, tested and rated per ASTM E814.
   1. Bio Fireshield, Inc.
   2. Nelson Firestop Products “FSP Firestop Putty Bar and Pad”.
   3. 3M Fire Protection Products “Fire Barrier Moldable Putty”.
   4. Hilti “CP618 Firestop Putty Stick”.

C. *Safing Insulation [P,T]*: Non-combustible ceramic or mineral wool fiber product formed into flexible blankets. Material shall be tested and rated per ASTM E84/UL723 as zero flame spread, fuel contribution and smoke development.
   1. Roxul Inc., “SAFE”.
   2. Thermafiber Fire Span Insulation.
   3. Owens Corning – Mineral Wool Safing Insulation.

D. *Mortar [P,T]*: Factory mixed, cementitious formulation not containing asbestos, that when mixed with water will have controlled swelling, negligible shrinkage and required little or no damming. Material shall be tested and rated per ASTM E814.
   1. Bio Fireshield Inc. “Bio Fire Rated K-10 Mortar".
   2. Nelson Firestop Products “Nelson CMP".
   3. Hilti "CP 637 Trowelable Firestop Compound".
   4. 3M "Fire Barrier Mortar"
   5. Tremco "Tremstop Fire Mortar"

2.3 MECHANICAL DEVICES

A. *Pre-cast Intumescent Collars for Pipes [P, T]*: Precast collars enclosing intumescent material inserts.
   1. Bio Fireshield Inc. "Bio Fire Rated Pipe Collars".
   2. Hilti "CP 642 Firestop Collar".
   3. Nelson Firestop Products "PCS Pipe Choke System".
   4. 3M "Fire Barrier Plastic Pipe Sleeve".
   5. Hilti “CP643 Firestop Collar”.
   6. Tremco, "Tremstop MCR":

2.4 FIRESTOP SPRAY

A. *Firestop Spray [P, T]*: Sprayable fire-rated mastic for firestopping building joint or top of fire rated walls systems.
   1. Bio Fireshield, Inc., "Biostop 700 Intumescent Firestop Mastic".
   2. Hilti “CP672 Firestop Joint Spray”.
   3. 3M “FireDam Spray”
   4. Tremco, "Tremstop Acrylic Spray".

2.5 SLAB EDGE FIRESTOP SPRAY

A. *Slab Edge Firestop Spray [P, T]*: Sprayable fire-rated fill material spray applied over top of slab edge forming material.
   1. Specified Technologies Inc., “Spec-Seal AS200 Elastomeric Spray”.
   2. Rectorseal, “Metacaulk 1200 Spray”.
   3. Hilti “CP672 Firestop Joint Spray”.

2.6 BLOCKS OR PILLOWS

A. Firestop blocks or pillows for large telecommunication penetrations or multiple electrical wiring penetrations.
   1. Bio Fireshield, Inc., "Bio Stop EZ-Block".
   2. Bio Fireshield, Inc., "Bio Firestop Pillows".
   3. Nelson Firestop Products, "Fire Brick".
   4. Nelson Firestop Products, "PLW Pillows".
   5. 3M "Fire Barrier Pillows.

2.7 FIRESTOP PANELS

A. Composite intumescent firestop boards or sheets suitable to fill large openings or openings planned for future penetrations.
   1. Nelson Firestop Products, "CPS Composite Sheet".
   2. Hilti, CP675 Firestop Boards".
   3. 3M. "Fire Barrier CS-195+ Composite Sheet".

2.8 FIRESTOP FOAM

A. Intumescent firestop foaming agent to fill openings around multiple penetrations.
   1. Hilti, "CP620 Fire Foam".

PART 3 EXECUTION

3.1 PREPARATION

A. Prepare substrate surfaces to receive firestopping materials and verify compatibility of intended material or system to substrate. Failure of firestopping material in the future, due to claimed

incompatibility of substrate material used, will not be valid. Installation of firestopping material will be considered as evidence that substrate and material selection, are compatible.

B. Follow manufacturer's recommendations for cleaning surfaces to receive firestopping materials so as to be free of dirt, dust, loose material, oil, grease, form release agents and other substances detrimental to proper installation of firestopping materials. Remove lacquer and other protective coatings from metal surfaces, without damaging the metal finish; use oil-free solvents. Apply masking tape to metal surfaces adjacent to recesses receiving firestopping materials to prevent smearing or staining of such metal surfaces.

C. Provide depth of recess to receive sealant or putty compounds per UL Design requirements. Where depth of recess is in excess of specified depth, place back-up safing insulation material in recess, forced into place under compression, to provide the specified recess depth. Where depth of recess is less than specified depth, cut the back surface of recess to the specified recess depth.

D. Recesses shall be dry when sealant or putty compounds are installed. Prime all recesses, in accordance with the compound specific through penetration fire stop systems in UL’s Fire Resistance Directory.

3.2 INSTALLATION

A. Use materials as received from the manufacturers, without additives or adulterations. Use one specific tested through-penetration fire stop systems in UL’s Fire Resistance Directory, or other approved documented test agency system.

B. Install firestopping where indicated on Drawings, and where application is required as part of a fire rated assembly or is required to maintain the fire rating of the assembly, and per specific through-penetration fire stop systems in UL’s Fire Resistance Directory, or other approved documented test agency system.

C. Install formed-in-place firestops immediately after adjoining work is in condition to receive such work. Fill all joints completely, regardless of variation of joint widths, and to full depth as prepared, at no extra cost to the Owner. Install compounds under pressure, without smearing adjacent surfaces. Firestop materials must have full and uniform contact with, and adhesion to, side surfaces of recess.

D. Sealants shall be finished and putty compounds may be finished to produce a smooth and even flat face, flush with face of material at each side. Tooling shall be in accordance with manufacturer's recommendations without damaging the seal or tearing the compound.

E. Install fire stopping to fill voids such as between perimeter edges of floor slabs and walls, at tops of walls and underside of deck at mechanical and electrical penetrations or where indicated on the Drawings per tested UL systems.

F. Keep areas of work accessible until inspection by applicable code authorities

G. Inspection of through-penetration firestopping shall be performed in accordance with ASTM E 2174, "Standard Practice for On-Site Inspection of Installed Fire Stops" or other recognized standard.

H. Install metal closures or sealants to contain fire safing insulation and prevent its displacement.

I. Provide firestopping at all joints in fire rated construction to carry the fire rating of the assembly to either the adjoining wall, floor or underside of deck.

3.3 THROUGH-PENETRATION FIRESTOP SYSTEM SCHEDULE

A. Where UL-classified systems are indicated, refer to the alpha-alpha-numeric designations listed in UL's "Fire Resistance Directory" under product Category XHEZ.

B. Firestop Systems for Metallic Pipes, Conduit or Tubing, comply with the following:
   1. Concrete Floor/Wall or Block Wall UL-Classified System: Submit tested system.
   2. Gypsum Wall Assembly UL-Classified System: Submit tested system.
   3. Gypsum Wall Assembly UL-Classified System: Submit tested system.
   4. Type of Fill Materials: One or more of the following to meet UL tested system
      a. Latex or acrylic sealant.
      b. Silicone or elastomeric sealant.
      c. Intumescent putty.
      d. Mortar.
      e. Firestop foam.

C. Firestop Systems for Nonmetallic Pipe, Conduit, or Tubing, comply with the following:
   1. Concrete Floor/Wall or Block Wall UL Classified System: Submit tested system.
   2. Gypsum Wall Assembly UL-Classified System: Submit tested system.
   3. Type of Fill Materials: One of more of the following to meet UL tested system:
      a. Latex or acrylic sealant.
      b. Silicone or elastomeric sealant.
      c. Intumescent putty.
      d. Intumescent wrap strips.
      e. Firestop collar.

D. Firestop Systems for Electrical Cables, Cable Trays and Bundles, comply with the following:
   1. Concrete Floor/Wall or Block Wall UL-Classified System: Submit tested system.
   2. Gypsum Wall Assembly UL-Classified System: Submit tested system.
   3. Type of Fill Materials: One of more of the following:
      a. Latex or acrylic sealant.
      b. Silicone sealant.
      c. Intumescent putty.
      d. Firestop foam.
      e. Fire blocks or pillows.

E. Firestop Systems for Insulated Pipes, comply with the following:
   1. Concrete Floor/Wall or Block Wall UL-Classified System: Submit tested system.

2. Gypsum Wall Assembly UL-Classified System: Submit tested system.
3. Type of Fill Materials: One of more of the following to meet UL tested system:
   a. Latex or acrylic sealant.
   b. Intumescent putty.
   c. Firestop foam.

F. Firestop Systems for Miscellaneous Electrical Penetrants, comply with the following:
1. Concrete Floor/Wall or Block Wall UL-Classified: Submit tested system.
2. Gypsum Wall Assembly UL-Classified: Submit tested system.
3. Type of Fill Materials: One of more of the following:
   a. Latex or acrylic sealant.
   b. Intumescent putty.
   c. Mortar.

G. Firestop Systems for Miscellaneous Mechanical Duct Penetrations: Comply with the following:
1. Concrete Floor/Wall or Block Wall UL-Classified: Submit tested system.
2. Gypsum Wall Assembly: Submit tested system.
3. Type of Fill Materials: One or both of the following:
   a. Latex or acrylic sealant.
   b. Intumescent putty.

H. Firestop Systems for Top of Fire Rated Partitions: Comply with one of the following:
1. Top of Gypsum Board Wall Assembly UL-Classified System: Submit tested system.
2. Top of Block Wall UL-Classified System: Submit tested system.
3. Type of fill materials. One or more of the following:
   a. Firestop Spray.
   b. Safing Insulation.

I. Firestop Systems for Floor to Wall Joints and edges of slab: Comply with UL tested assembly joint (XHDG) CW-D series of tests:
1. Firestop spray.
2. Safing Insulation.

J. Firestop Systems With Large Complex Openings or No Penetrating Items:
1. Concrete Floor/Wall or Block Wall UL Classified System: Submit tested system.
2. Gypsum Wall Assembly UL Classified System: Submit tested system.
3. Type of Fill Materials: One or more of the following to provide UL tested system.:
   a. Firestop Panels.
   b. Firestop Blocks or Pillows.

3.4 ADJUSTING AND CLEANING

A. Remove firestopping materials not complying with the requirement of this Section, re-prepare the recesses and install new materials to provide finish work complying with the requirement specified, at no extra cost to the Owner.

B. Clean surfaces adjacent to the sealed joints, and remove sealant and putty compound smears and other soiling resulting from application of materials. At metal surfaces, remove masking tape and other residue. Exercise care in cleaning and removal operations so as not to mar or damage finishes on materials adjacent to joints. Repair or replace marred or damaged materials, at no extra cost to the Owner.

END OF SECTION

Revision History	
Date	**Rev. No.**
02-19-09	0

DO/djo
P:__PROJECTS_SF07\sf070003.0001nsls ii ccwf expansion\SPC\07840.doc

SECTION 07900

JOINT SEALANTS

PART 1 GENERAL

1.1 SUMMARY

A. Section Includes:
   1. Sealant Compound: Calk with sealant compound, exposed joints on exterior of the building as required to provide a weathertight condition, and joints throughout that are subject to movement. The principal locations are as follows:
      a. Joints between metal frames, and framing of all kinds, and adjacent construction in exterior walls, interior and exterior sides.
      b. Control joints in interior and exterior masonry walls, both sides.
      c. Locations where “Sealant” is noted.
      d. Interior joints between adjacent precast concrete units, and interior and exterior joints between precast concrete units and adjacent construction.
      e. Interior and exterior joints between the following work and adjacent construction:
         1) Preformed metal siding.
         2) Roof sheet metal and flashing, except at direct interface with roofing.
   2. Calking Compound: Calk with calking compound, joints on interior of building that are not subject to movement that require filling for appearance or sanitary reasons. The principal locations are as follows:
      a. Joints between metal frames of all kinds and adjacent construction, in interior walls and partitions.
      b. All locations where “calk” is noted, except if the locations are specified to receive sealant compound.
   3. LEED Requirements: All interior sealants and adhesives shall comply with the South Coast Air Quality Management District (SCAQMD) Rule #1168, and VOC limits as defined in LEED NC 2.2.

B. Related Work Specified in Other Sections:
   1. Gasketing and calking of joints in:
      a. Concrete pavement - Division 2.
      b. Concrete floor slabs - Division 3.
      c. Ceramic tile flooring - Division 9.
   2. Gasketing as necessary and calking of joints between adjacent units of the following work is specified in the following Sections; joints between the following work and adjacent construction are to be calked as specified in this Section.
      a. Preformed Metal Siding - Division 7.
      b. Flashing and Sheet Metal – Division 7.
   3. Raking of mortar joints to receive calking work - Division 4.
   4. Gasketing in masonry control joints - Division 4.
   5. Glazing Work - Division 8.

1.2 PERFORMANCE REQUIREMENTS

A. Elastomeric joint sealants: Sealants that provide and maintain watertight and airtight joints and seals without the deterioration and staining of adjacent materials.

B. Interior joint sealants and calks: Sealants and calks that provide and maintain watertight and airtight joints and seals without the deterioration and staining of adjacent materials.

1.3 SUBMITTALS

A. Furnish submittals for items that are identified in this Section by a different typeface and a bracketed code (e.g., *Item [L]*). Refer to Division 1 General Requirements for definition of codes for types of submittals and the administrative requirements governing submittal procedure. General submittal requirements pertaining to this Section are specified under this Article.

B. *Sealant and Calking Compound Data [P]:* Submit product data describing composition, together with color chart.

C. Sealant Guarantee: Calking work using sealant compound to remain in a serviceable, watertight, elastic, adhesive condition for a period of 5 years from date of final acceptance of the Project. Agree in such written guarantee to make good, at no cost to the Owner, imperfections which may develop in this work during the guarantee period as well as to repair damage to other work caused by such imperfections or the repair of same. Submit guarantees to Owner.

1.4 QUALITY ASSURANCE

A. Installer Qualifications: The Work of this Section shall be carried out by an approved installer having specialized in this Work as its primary business for at least 5 years, and having performed satisfactorily Work of this type, size and scope. Employ craftsmen who are thoroughly skilled and completely familiar with the specified requirements. Provide the services of a competent foreman or supervisor who shall be available at all times during the progress of the work of this Section.

B. Single source: Obtain and provide sealants of each joint type from 1 manufacturer.

C. Field test sealant adhesion to substrates before installation as follows:
   1. Locate test joints as directed by the Owner's Representative.
   2. Conduct the field tests at the determined locations for each application as follows:
      a. Provide a test joint of each type of elastomeric sealant and substrate.
      b. Provide a test joint of each type of interior joint sealant and calk and substrate.
   3. Coordinate dates and times of the installation of the test joints with the Owner's Representative.
   4. Coordinate dates and times of the installations of the test joints for field observation of the test joints by the manufacturer's technical representative.

5. Test joint sealant adhesion by the proposed ASTM hand-pull method as follows:
   a. Install joint sealants in 4 foot long test joints providing materials, accessories and substrates identical to the Work. Sealants must be cured before testing.
   b. Make a knife cut horizontally from 1 side of the joint to the other. Also make 2 vertical cuts (from the horizontal cut) approximately 3 inches long on each side of the joint.
   c. Using fingers, firmly grasp the flap of the sealant at the cut and pull at 90 degrees from the sealant plane. Pull flap until adhesive or cohesive failure is achieved a distance of 1 inch beyond the 3 inch vertical cuts or a distance required by the manufacturer.
   d. When the seal is interfacing dissimilar materials, a test shall be run separately on each side of the joint by making a third vertical cut down the center of the sealant.

D. Report cohesive or adhesive failure and pull distances for testing of sealant and substrates. For adhesive failures, retest until adequate adhesion is obtained.

E. Evaluation: Satisfactory sealants are those that do not fail in adhesion, and which also comply with other requirements of the specification. Sealants that fail to adhere to substrates shall not be used.

1.5 PRODUCT DELIVERY, STORAGE AND HANDLING

A. Deliver packaged materials to the Project site in their original unopened containers, packages and bundles, bearing labels that identify manufacturer's name, brand name, and grade or type.

1.6 PROJECT SITE CONDITIONS

A. Do not install compounds when ambient air temperature is less than 40 degF or when recesses are wet or damp; provide temporary heated enclosures to comply with this requirement.

B. Protect adjacent exposed finished surfaces from damage prior to performing work, by masking or other acceptable means. Remove protection when no longer required, and clean the adjacent exposed surfaces of compound deposited upon them.

PART 2 PRODUCTS

2.1 MATERIALS

A. Materials, General:
   1. Provide joint sealants that are compatible with backing material, accessories, substrates and adjacent sealants for the intended uses based on the testing, recommendations experience and written instructions of the sealant manufacturer.
   2. Colors for Exposed Joint Sealants: Provide joint sealant colors (from matching Architect-Engineer samples) (as indicated by manufacturer's numbers in this specification section or drawings) (as selected by the Architect-Engineer from the manufacturer's full range of colors).

B. Sealant Compound:
   1. Two-Part Polysulfide Sealant: ASTM C920, Type M, Grade NS, Class 25, Use T, NT, M, A, G, and O as appropriate. Furnish in standard colors as selected.
      a. Morton International “Thiokol 2P”.
      b. Pecora Corp. “Synthacalk GC-5”
      c. Polymeric Systems, Inc. Polysuffide PSI-350 Sealant.
      d. Sonneborn, Division of ChemRex, Inc. “Sonolastic Two Part”
   2. One-Part Polysulfide Sealant: ASTM C920, Type S, Grade NS, Class 25, Use NT, M, A, G and O as appropriate. Furnish in standard colors as selected.
      a. Morton International “Thiokol 1P”.
      b. Pecora Corp. “Synthacalk GC-9”
      c. Polymeric Systems, Inc. “PSI-7000 Polysulfide Rubber”.
      d. W.R. Meadows Inc., "Deck-O-Seal One Step".
   3. Multi-Part Polyurethane Sealant: ASTM C920, Type M, Grade NS, Class 25, Use T, NT, M, G, A, and O as appropriate. Furnish in standard colors as selected.
      a. Mameco International “Vulkem 227”
      b. Pecora Corp. “Dynatrol II Sealant”
      c. Polymeric Systems, Inc. “270 Multi-Component Urethane”.
      d. Sonneborn, Division of ChemRex, Inc. “Sonolastic NP 2”
      e. Tremco “Dymeric” or “Dymeric 240 FC”
      f. Sika "Sikaflex 2CNS".
   4. One-Part Polyurethane Sealant: ASTM C920, Type S, Grade NS, Class 25, Use NT, M, , G, A, and O as appropriate. Furnish in standard colors as selected.
      a. Pecora Corp. “Dynatrol 1”.
      b. Polymeric Systems, Inc. “PSI-901/RC-1 One Part Urethane”.
      c. Sonneborn, Division of ChemRex, Inc. “Sonolastic NP1”
      d. Sika "Sikaflex 1A".
      e. Sika "Sikaflex 15LM".
   5. One-Part Silicone Sealant: ASTM C920, Type S, Grade NS, Class 25, Use NT, M, G, A, and O as appropriate. Furnish in standard colors as selected.
      a. Dow Corning Corp. “790 Building Sealant”
      b. General Electric Silicone Products Department “Silpruf Sealant”
      c. Pecora Corp. “864 Silicone Sealant”
      d. Sonneborn, Division of ChemRex, Inc. “Sonolastic Omniseal”
      e. Tremco “Spectrem 1”
      f. Sika "Sikasil C-990".
   6. One-Part Mildew-Resistant Silicone Sealant: Mildew-resistant formulation; ASTM C920, Type S, Grade NS, Class 25, Use NT, M, A, and O. Furnish in standard colors as selected. Use to seal joints in damp areas such as around ceramic tile, showers, tubs, sinks and other plumbing fixtures.
      a. Dow Corning Corp. “786 Mildew Resistant Sealant”.
      b. General Electric Silicone Products Department “Sanitary 1700 Sealant”
      c. Pecora Corp. “898 Silicone”.
   7. *Chemical Resistant Sealant [P]*:
      a. Pecora Corp. “GC-2 Synthacalk”.

C. Calking Compound:
   1. Acrylic Latex Calk: Non-sag, 1-part latex base calk, per ASTM C834 Furnish in standard colors as selected.
      a. DAP Inc. “ALEX Acrylic Latex Calk”
      b. Pecora Corp. “AC-20 Acrylic Latex Calk”
      c. Sonneborn “Sonolac”
      d. Tremco “Acrylic Latex Calk Tremflex 834”
   2. Acrylic Polymer Calk: ASTM C920, Type S, Grade NS, Class 12-1/2, Use NT, M, A, and O. Furnish in standard colors as selected.
      a. Tremco “Mono 555”

D. Primers:
   1. Primers: Types recommended by the compound manufacturers to provide adhesion of the compounds to, and to prevent staining of, adjacent surfaces for all conditions encountered on the Project.

E. Bond-Preventive Materials:
   1. Bond-Preventive Materials: Types recommended by the sealant compound manufacturer to prevent bonding of compound to back surface of recess, for all conditions encountered on the Project.

F. Back-Up Material:
   1. Back-up Material: ASTM C1330 Type C of size and density to control sealant. Round, solid section, skinned surfaced, soft foam gasket stock in diameters 1/16 inch to 1/8 inch larger than width of joints in which it is installed. Back-up material skin shall be of proper consistency so as not to bond to sealant or calking compound.

PART 3 EXECUTION

3.1 PREPARATION

A. Prepare joints to receive compound and verify suitability. Failure of compound in the future, due to claimed unsuitability of joint, will not be valid. Installation of compound is considered as evidence that joint is suitable to receive compound.

B. Clean recesses which are to receive compound so as to be free of dirt, dust, loose material, oil, grease, form release agents and other substances detrimental to the compound’s performance. Remove lacquer and other protective coatings from metal surfaces without damaging the metal finish; use oil-free solvents.

C. Apply masking tape to surfaces adjacent to recesses to prevent smearing, staining or damage by sealant contact or by sealant cleaning methods to remove smears. After joint tooling, remove tape without disturbing or damaging the sealant joint.

D. Depth of recess to receive compounds is not to exceed joint width up to a maximum of 1/2 inch. Where depth of recess is in excess of specified depth, place back-up material in recess, and

force into place under compression, to provide the specified recess depth. Where depth of recess is less than specified depth, cut the back surface of recess to the specified recess depth.

E. Recesses are to be dry when compounds are installed. Prime recesses in accordance with the compound manufacturer's written instructions, to develop proper mechanical adhesion of compound to recess surfaces. Keep primers to recessed areas of joint sealant bond. Prevent spillage and primers from damaging or staining adjacent surfaces.
   1. Where depth of recess for sealants is at proper depth, apply bond-preventive material to back surface of recess.

3.2 INSTALLATION

A. Install materials per manufacturer's directions. Use materials as received from the manufacturers, without additives or adulterations. Use 1 manufacturer's product for each kind of product specified.
   1. Mix 2-component compound per manufacturer's directions, until the compound is thoroughly and uniformly blended and install compound prior to start of hardening or curing cycle.

B. Install compound immediately after adjoining work is in condition to receive such work. Fill all joints completely, regardless of variation of joint widths, and to full depth as prepared, at no extra cost to the Owner. Install compounds under pressure, without smearing adjacent surfaces.
   1. Sealant compounds must have full and uniform contact with, and adhesion to, side surfaces of recess.
   2. Calking compounds must have full and uniform contact with, and adhesion to, all surfaces of recess.

C. Finish face of compound in recesses smooth and even. At recesses in angular surfaces, finish the compound with a flat face, flush with face of material at each side. At recesses in flush surfaces, finish the compound with a concave face, flush with face of material at each side. Compound may be tooled, provided that such tooling does not damage the seal nor tear the compound. Surface of compounds shall be free from dirt, stain or other defacements and shall be smooth and uniform in color.

3.3 ADJUSTING AND CLEANING

A. Remove compounds not complying with these requirements, re-prepare the recesses and install new compounds to provide finish work complying with the requirements specified, at no extra cost to the Owner.

B. Clean surfaces adjacent to the calked joints, remove compound smears or other soiling resulting from application of compounds. At metal surfaces, remove masking tape and other residue. Exercise care in cleaning and removal operations so as not to mar or damage finishes on materials adjacent to joints. Repair or replace marred or damaged materials, at no cost to the Owner.

END OF SECTION

Revision History	
Date	**Rev. No.**
A	0
B	0
C	0
D	0
E	0
F	0
02-19-09	0

DS/djo
C:\d\timsdatasf\brookhaven_national_laboratory\sf070003\200-projexec\280-spec\07900.doc

THIS PAGE INTENTIONALLY LEFT BLANK

SECTION 08110

STEEL DOORS AND FRAMES

PART 1 GENERAL

1.1 SUMMARY

A. Scope
1. Provide hollow metal steel doors, door frames and window/glazing frames as specified, shown, or scheduled, with components and accessories as required for a complete installation.

B. Related Work Specified Under Other Sections
1. Glazing – DIVISION 8.
2. Hollow Metal Steel Doors in Demountable Partitions - DIVISION 10.
3. Painting - DIVISION 9.
4. Door Hardware – DIVISION 8.
5. Electric Power to Door Hardware - DIVISION 16.
6. Building in of anchors and grouting of frames in masonry construction - DIVISION 4.

C. Products Installed But Not Furnished Under This Section
1. Door Hardware – DIVISION 8.

1.2 QUALITY ASSURANCE

A. Door and Frame Standards
1. Steel doors and frames shall meet ANSI A250.8 for levels and models specified and ANSI A250.4 for physical-endurance levels.
2. All steel doors and frames shall meet the tolerances established by the Steel Door Institute (SDI #117-93 dated 3/95).

1.3 SUBMITTALS

A. Shop Drawings And Product Data
1. Furnish submittals for items that are identified in this SECTION by a different typeface and a bracketed code (e.g., *Item [L]*). Refer to Division 1, General Requirements for definition of codes for types of submittals and the administrative requirements governing submittal procedure. Additional submittal requirements pertaining to this SECTION are specified herein under this Article.
2. Door Locations and Identification: Submit shop drawings, and list the location in building and identification mark for each hollow steel door and frame. Indicate door hardware requirements. Submit manufacturer's printed instructions covering installation of the specified work.
3. Submit shop drawings and product data, and identify applicable details of design and construction of all hollow steel work.

1.4 DELIVERY, STORAGE AND HANDLING

A. Deliver hollow steel work cartoned or crated to provide protection during transit and job storage. Provide additional sealed plastic wrapping for factory finished doors.

B. Inspect hollow steel work upon delivery for damage. Minor damages may be repaired provided refinished items are equal in all respects to new work and acceptable to OWNER'S REPRESENTATIVE; otherwise, remove and replace damaged items as directed.

C. Store doors and frames at building site under cover. Place units on minimum 4 inch high wood blocking. Avoid use of non-vented plastic or canvas shelters which could create humidity chamber. If cardboard wrapper on door becomes wet, remove carton immediately. Provide 1/4 inch spaces between stacked doors to promote air circulation.

PART 2 PRODUCTS

2.1 MATERIALS

A. Steel Sheet
   1. Stock Commercial Doors: Hot rolled sheets per ASTM A-569, commercial steel (CS), Type B; or cold-rolled steel per ASTM A-568.
   2. Frames and Unexposed Surfaces: Prime quality, cold-rolled, commercial stock.
   3. Galvanized Members: Zinc-coated steel sheet per ASTM A 653; galvanized G60, chemically treated and with minimized spangle; or galvannealed A60, dull gray. Use at <u>all exterior</u> door and frame locations, and at other door and frame locations so specifically noted.

B. Prime Finish System
   1. Prime Paint: Rust-inhibitive type, oven-bake or air dry curing type complying with ANSI 250.10.
   2. Filler: Mineral type compatible with the prime paint used and the oven-bake or air dry curing process.

C. Accessories
   1. Insulation for Non-Fire-Rated Doors: Mineral rock wool, mineral fiber, or polyurethane or polystyrene core at all exterior locations, and honeycomb or polystyrene core at interior locations.
   2. Button Silencers: Solid, molded rubber.
   3. Frame Anchors: Galvanized steel, minimum 18 gage, of the following types:
      a. Provide at masonry walls, T-type, flat or corrugated anchors with head to fit snug in frame profile and stem 3 inches x 10 inches. Wire anchors are acceptable.
      b. At wood or metal stud partitions, use insert type anchor with notched stem designed for sheet metal screw attachment to wood or closed metal stud or for wire-tying to open metal stud.
   4. Rough-Buck Sub-Frame: 12 gage, galvanized steel.

2.2 FABRICATION AND MANUFACTURE

A. Manufacturers
   1. Stock Commercial Hollow Steel Fabricator
      a. Amweld Building Products, Inc.
      b. Ceco Door Products Div., A United Dominion Co.
      c. Curries Co.
      d. The Kewanee Corp.
      e. Pioneer Industries Inc.
      f. Mesker Door Inc.
      g. Steelcraft, an Ingersoll-Rand Co.

B. Quality Of Work
   1. Cut and form joints to hairline measurements. Make all exposed joints smooth and invisible. Grind all exposed welds smooth and flush. Form all arises sharp and true. Miter all face joints.

C. Doors
   1. *Stock Commercial Doors [D,P]:* Flush seamless, 1-3/4 inch thick; use ANSI A250.8, Level 3 with 16 gage galvanized face sheets, Physical Performance level A, model 2-Seamless, with Polyurethane or Polystyrene Core at exterior locations; and use ANSI A250.8, Level 2 with 18 gage face sheets, Physical Performance Level B, Model 2-Seamless, with Honeycomb or Polyurethane Core at interior locations. Provide closed flush tops on exterior doors to prevent moisture penetration.
   2. Fabricate doors with rabbeted openings for glazing.
   3. Built-in Louver Units: Furnish of thickness to match doors. Fabricate louver units with inverted “V” shaped blades set in a narrow line subframe. Louver units shall have a 35% minimum free air area. Door louver units shall be mounted flush into the door without overlapping molding on the door face sheet.
      a. Furnish UL approved fusible-link louvers in fire-rated doors.
   4. Door Integral Astragal: Furnish with all pairs of doors labeled or nonlabeled, unless otherwise noted.
   5. Double Door Wireway: Provide in double doors in which an electric strike is mounted in the inactive leaf.
   6. Thermal Insulated Doors: Provide at all exterior locations. Interior of thermal insulated doors shall be completely filled with rigid foamed-in-place polyurethane or procured polystyrene foamed board, permanently bonded to each face panel. The U-value through the door shall not exceed 0.24. The door assembly, consisting of door frame, and perimeter seals, shall have an air infiltration rate not greater than 0.20 cubic feet per minute per foot of crack length when tested in accordance with ASTM E 283.
   7. Furnish closed flush tops at all exterior doors to prevent moisture penetration.

D. Door And Window Frames

1. *Door and Window Frames [D]:* Of the type that conceal anchors in place, with the following exceptions or as indicated.
   a. At concrete or existing masonry walls, use either "existing wall anchor assembly" or rough-buck sub-frame.
   b. At structural channel or plate rough openings, weld the frames to the rough opening steel.
2. Frame Door Stop: Form integral with frame.
3. Shop-fabricate frames from a single width of 14 gage galvanized steel sheet at exterior openings and 16 gage prime painted steel sheet at interior openings unless noted otherwise on DRAWINGS. All frames shall be continuously welded and ground smooth, with mitered corners and two temporary spreader bars. Use spreader bars for shipping only, remove prior to setting frames in wall. Installer responsible for setting frames in wall shall use wood spreader bars for the purpose of plumbing and truing all frames. Frames shall be made to a true rectangular shape, and the vertical plane formed by the door stops and the face of the frame shall be in parallel planes, with all parts out of wind.
4. After welding and grinding mitered corners on galvanized frames, re-galvanize inside and outside of the welded corners with Z.R.C. or Brite Zinc cold galvanizing compound and re-prime coat all the area.
5. Door Frame Angle Reinforcement: Furnish and weld in frame heads as scheduled, and position to allow the vertical leg to fit in with adjacent construction.
6. Door Frame Adjustable Jamb Anchors: Space not over two feet on centers nor less than three per jamb. For labeled frames, weld the anchors to the frames in the shop. Frame jambs shall extend to surface of finish floor only. Provide frame jambs with two piece adjustable floor anchors at bottom, of length to extend to concrete base slabs. Drill bottom piece of floor anchor to receive two 3/8 inch diameter expansion bolts.
   a. Rough-buck sub-frames shall be continuous for full length of jamb.
7. Furnish frames with not less than three button silencers in the lock jamb; in frames for pairs of doors, provide two button silencers in head, placed near meeting edge of each leaf. Provide leak-proof caps at all holes in frames, welded to inside of frame.

E. Glazing Frames

1. *Glazing Frames [D]:* Fabricate from not less than 16 gage material, with non-removable and removable with glass stop mouldings. Provide anchors as specified for door frames. Shop-fabricate glazing frames as a part of the door frames where adjacent to each other.

F. Moldings

1. Moldings: Furnish around glazed or louvered panels in doors and in glazing frames. Moldings on exterior side of doors and frames on corridor or other non-secure-area side of interior doors and glazing frames shall be non-removable. Moldings on the interior or secure-area side shall be removable.
2. Moldings for doors and frames, including glazing frames, shall be square or rectangular shaped, formed from No. 18 gage sheet. Non-removable moldings shall either be integral with the door or frame, or welded thereto. Removable moldings shall have butted corners producing hairline joints, and shall be secured with countersunk Phillips head machine screws; provide a minimum of two screws per each length of molding; where length is

more than 18 inches long, provide additional screw anchorage at not over 12 inches on center. Moldings shall be mounted flush into the door or frame without overlapping the door or frame face sheet.

G. Preparation For Door Hardware
   1. Cut out, drill, tap, countersink, reinforce and otherwise prepare doors and door frames as required to receive door hardware. Countersink butts, strikes and lockset fronts into the surface, so as to be flush.
   2. Close countersink areas with reinforcing, not less than 3/16 inch thick steel plate for butts, 16 gage for latch and lock sets, and 12 gage for closers. Weld reinforcing plates to the interior of the door frames.
   3. Reinforcing shall be of minimum gage, shape and securement per ANSI A250-6.
   4. Refer to DIVISION 8 “DOOR HARDWARE” for hardware locations.

H. Finishing
   1. Clean, degrease and “bonderize” hollow steel surfaces prior to finishing. Prime all surfaces, including inside surfaces of frames, with rust-inhibitive priming paint. Welded corner frames are to be re-prime painted after welding.
   2. Apply one coat of rust-inhibitive primer to exposed surfaces of hollow steel work, make surfaces flush and smooth, fill irregularities with one or more coats of mineral filler, and apply another coat of primer. Sand smooth between coats and separately bake-on each coat.
   3. Apply one coat of specified type of rust-inhibitive primer to exposed surfaces of hollow steel work.
   4. Apply a coating of Z.R.C. Cold Galvanizing Compound or Brite Zinc Galvanizing Compound to areas where welding and grinding have removed the galvanizing from the door or frame and re-prime area.

PART 3 EXECUTION

3.1 INSTALLATION

A. Frames
   1. Deliver frames to the Project Site for installation.
   2. Install frames in concrete walls or existing masonry walls. Where rough-buck sub-frames occur, secure same at two feet centers maximum; secure hollow steel frames to sub-frames along face of returns, at 18 inch centers maximum. Where rough-buck sub-frames do not occur, bolt the hollow steel frames to the wall opening edges with the “existing wall anchor assemblies”. Provide one assembly each at top and bottom of jamb, not over eight inches away from end and at not over 2 feet between end assemblies, in each jamb. Countersink bolt heads to be flush with the face of the stops, through sleeved spacers behind the stops.
   3. Install frames at structural channel or plate rough openings by welding the frames to the rough opening steel. At each jamb**,** use four 2-inch long fillet welds at each face of frame (total of 16 welds). At head, use three 2-inch long fillet welds at each face of frame (total of 6 welds).

4. Comply with provisions of SDI-105-92 “Recommended Erection Instructions for Steel Frames”, unless otherwise shown.

B. Doors
1. Assemble door hardware, place accurately and attach securely to the doors and frames.
2. Hang doors to fit closely in frames without binding; to be in full contact with stops at all points when closed; to swing easily and quietly, without striking the floor at any point of the swing; and to remain in any position left between opened and closed without moving. Exterior doors shall be weathertight when closed.
3. Fit doors accurately in frames, within clearances specified in ANSI A250.8.
4. Thermal insulated door perimeter seals shall be adjusted for proper operation.

3.2 FIELD QUALITY CONTROL

A. After doors are installed, test-demonstrate in the presence of the OWNER’S REPRESENTATIVE that the doors operate properly under all conditions. Adjust doors and door hardware if tests show improper functioning.

END OF SECTION

Revision History	
Date	**Rev. No.**
A	0
B	0
C	0
D	0
E	0
F	0
02-19-09	0

DS/djo [AR, ST]
C:\d\timsdatasf\brookhaven_national_laboratory\sf070003\200-projexec\280-spec\08110.doc

SECTION 08310

ACCESS DOORS

PART 1 GENERAL

1.1 SUMMARY

A. Section Includes
1. Framed metal access doors as specified, indicated, or scheduled, with components as required for a complete installation.

B. Related Work Specified In Other Sections:
1. Masonry - Division 4.
2. Gypsum Wallboard - Division 9.
3. Access panels required by mechanical or electrical trades but not shown on the Drawings - DIVISIONS 15 AND 16.

1.2 SUBMITTALS

A. Furnish submittals for items that are identified in this Section by a different typeface and a bracketed code (e.g., *Item [L]***).** Refer to Division 1, General Requirements for definition of codes for types of submittals and the administrative requirements governing submittal procedure.

B. Product Data: Submit product data for all metal access doors.

1.3 PROJECT SITE CONDITIONS

A. Obtain specific locations and sizes for required access doors from trades requiring access to concealed equipment or accessories. Field verify existing openings for proper coordination and fit.

1.4 PRODUCT DELIVERY, STORAGE AND HANDLING

A. Wrap, carton, and crate as required to provide physical and climatic protection during loading, shipping and job site storage and handling.

B. Deliver packaged materials to the project site in the manufacturer's original, unopened containers which bear intact, legible and visible labels that identify the manufacturer's name and brand name, the contents, grade and type.

C. Upon delivery, immediately inspect shipments to assure their compliance with the requirements of the Contract Documents and approved submittals, and that products are complete, undamaged and adequately protected. Immediately report damaged, missing, or defective items. Remove broken, damaged or unlabeled items from the site immediately.

D. Store products in accordance with manufacturer's instructions with seals and labels intact, legible, and visible. Store products in a manner to prevent damage, soiling, theft, deterioration and contamination. Marred surfaces, cracked, checked split or warped materials will be rejected. Store materials subject to damage by climatic conditions in weather tight enclosures. Maintain temperature and humidity within the ranges required or recommended by the manufacturer.

E. Repair or clean items that have been damaged or soiled that can be restored to an "as new" condition at no cost to the Owner. The Owner's Representative shall be the judge of the effectiveness of remedial measures. Additional time or expenses required to secure replacements and to make repairs will not be considered by the Owner's Representative to justify an extension in the Contract time of completion or an increase in the Contract amount.

PART 2 PRODUCTS

2.1 MANUFACTURERS

A. Metal Access Doors
   1. Rust-inhibitive painted steel units with flush metal doors, of sizes indicated. Provide units compatible with construction substrate.
   2. *Regular Type Metal Access Doors [P]*: With concealed spring hinge on door and (screw-driver operated cam latch) (key operated cylinder lock), for use in wall or ceiling construction not fire-rated.
      a. Beaded Flange Drywall Access Doors for use in wall or ceiling non-fire rated gypsum board surfaces.
         1) J. L. Industries, Incorporated "WB Series".
         2) Karp Associates, Inc. "KDW Series".
         3) Larsen's Manufacturing Co. "L-DWC".
         4) Milcor, Inc. "DW".
         5) The Williams Bros. Corp. "WB-DW".

2.2 MATERIALS

A. Steel Plates, Shapes, and Bars: ASTM A 36/A 36M.

B. Hot-Rolled Steel Sheets: ASTM A 569/A 569M, Commercial Steel (CS), Type B; free of scale, pitting, and surface defects; pickled and oiled; with minimum thickness indicated representing specified nominal thickness according to ASTM A 568/A 568M.

C. Cold-Rolled Steel Sheets: ASTM A 366/A 366M, Commercial Steel (CS), or ASTM A 620/A 620M, Drawing Steel (DS), Type B; stretcher-leveled standard of flatness; with minimum thickness indicated representing specified nominal thickness according to ASTM A 568/A 568M. Electrolytic zinc-coated steel sheet, complying with ASTM A 591/A 591M, Class C coating, may be substituted at fabricator's option.

D. Electrolytic Zinc-Coated Steel Sheet: ASTM A 591/A 591M, Commercial Steel (CS), with Class C coating and phosphate treatment to prepare surface for painting; with minimum thickness indicated representing specified nominal thickness according to ASTM A 568/A 568M for uncoated base metal.

E. Metallic-Coated Steel Sheet: ASTM A 653/A 653M, Commercial Steel (CS), Type B, with A60 (ZF180) zinc-iron-alloy (galvannealed) coating of G60 (Z180) mill-phosphatized zinc coating; stretcher-leveled standard of flatness; with minimum thickness indicated representing specified thickness according to ASTM A 924/A 924M.

F. Stainless-Steel Sheet, Strip, Plate, and Flat Bars: ASTM A 666, Type 304; with minimum sheet thickness indicated representing specified thickness according to ASTM A 480/A 480M.

G. Aluminum Sheet: ASTM B 209/B209M, alloy and temper recommended by aluminum producer and finisher for type of use and finish indicated, and with not less than strength and durability properties of alloy 5005-H15; with minimum thickness indicated representing specified thickness according to ANSI H35.2/H35.2M.

H. Stainless-Steel Bars and Shapes: ASTM A 276, Type 304.

I. Rolled-Steel Floor Plate: ASTM A 786/A 786M, rolled from plate complying with ASTM A 36/A 36M or ASTM A 283/A 283M, Grade C or D.

J. Rolled-Stainless-Steel Floor Plate: ASTM A 793.

K. Aluminum Extrusions: ASTM B 221 B 221M, alloy 6063-T6.

L. Aluminum-Alloy Rolled Tread Plate: ASTM A 632/A 632M, alloy 6061-T6.

M. Drywall Beads: Edge trim formed from 0.0299-inch zinc-coated steel sheet formed to receive joint compound and in size to suit thickness of gypsum board.

N. Plaster Bead: Casing bead formed from 0.0299-inch [**0.76-mm**] zinc-coated steel sheet with flange formed out of expanded metal lath and in size to suit thickness of plaster.

2.3 FINISHES

A. Shop Primers: Provide primers that comply with Division 9 Section “Painting.”

B. Shop Primer for Ferrous Metal: Fast-curing, lead- and chromate-free, universal modified-alkyd primer complying with performance requirements in FS TT-P-664; selected for good resistance to normal atmospheric corrosion, compatibility with finish paint systems indicated, and capability to provide a sound foundation for field-applied topcoats despite prolonged exposure.

C. Shop Primer for Metallic-Coated Steel: Organic zinc-rich primer complying with SSPC-Paint 20 and compatible with topcoat.

D. Galvanizing Repair Paint: High-zinc-dust-content paint for regalvanizing welds in steel, complying with SSPC-Paint 20.

2.4 INSTALLATION

A. Coordinate installation with work of other trades. Comply with manufacturer's instructions for installation.

B. Set access doors accurately in position with face panels plumb, flush and level in relation to adjacent finish surfaces, and attach frames to supports.

2.5 FIELD QUALITY CONTROL

A. Repair or clean items that have been damaged or soiled that can be restored to an "as new" condition at no cost to the Owner.

B. After doors are installed, test-demonstrate in the presence of the Owner's Representative that the doors operate properly under all conditions. Lubricate hinges, latches and other moving parts. Adjust doors and hardware if tests show improper functioning.

END OF SECTION

Revision History	
Date	**Rev. No.**
A	0
B	0
C	0
D	0
E	0
F	0
02-19-09	0

DS/djo
C:\d\timsdatasf\brookhaven_national_laboratory\sf070003\200-projexec\280-spec\08310.doc

SECTION 08331

OVERHEAD COILING DOORS

PART 1 GENERAL

1.1 SUMMARY

A. Section includes overhead coiling doors as required to close the openings, mounted as detailed or noted. Provide hand chain operation.

B. Related Work Specified In Other Sections
   1. Steel framed door openings - Division 5.
   2. Painting - Division 9.

1.2 PERFORMANCE REQUIREMENTS

A. Design exterior door construction, including slat profile and gage, guides, windlocks, and other accessories, of sufficient rigidity to withstand a wind pressure of 20 psf, uniformly applied from either side of door, when door is in the fully closed position.

B. Design components to operate for not less than 20,000 complete open/close cycles.

C. Provide a tamper-proof cycle counter to 100,000 cycles.

1.3 SUBMITTALS

A. Furnish submittals for items that are identified in this Section by a different typeface and a bracketed code (e.g., *Item [L]*). Refer to Division 1, General Requirements for definition of codes for types of submittals and the administrative requirements governing submittal procedure. General submittal requirements pertaining to this Section are specified herein under this Article.

B. Shop drawings shall show all overhead coiling doors including framing, mounting, and all accessories required for complete installation work to be provided.

C. Guarantee: Furnish to the Owner, a written guarantee warranting that the overhead coiling door system will remain free from defects of workmanship and materials and will provide an operating overhead coiling door for a period of five years from date of final acceptance of the project. Include in the guarantee the provision that defective work will be repaired or replaced without delay, and at no cost to the Owner, during the guarantee period, including removal and replacement of other work required to repair or replace the defective parts.

D. Submit directly to Owner manufacturer's operating and maintenance descriptive and operating data for door and operator per Division 1, General Requirements.

1.4 QUALITY ASSURANCE

A. Installer Qualifications: Retain an experienced, certified, or authorized representative of the door manufacturer to install and maintain the door through the warranty period.

B. Limitation of Source: Provide all doors, operators, and controls from one single source from the listed manufacturers indicated in PART 2.

1.5 DELIVERY, STORAGE AND HANDLING

A. Wrap, carton, and crate as required to provide physical and climatic protection during loading, shipping and job site storage and handling.

B. Deliver packaged materials to the project site in the manufacturer's original, unopened containers, which bear intact, legible and visible labels that identify the manufacturer's name and brand name, the contents, grade and type.

C. Upon delivery, immediately inspect shipments to assure their compliance with the requirements of the Contract Documents and approved submittals and that products are complete, undamaged and adequately protected. Immediately report damaged, missing, or defective items. Remove broken, damaged or unlabeled items from the site immediately.

D. Store products in accordance with manufacturer's instructions with seals and labels intact, legible, and visible. Store products in a manner to prevent damage, soiling, theft, deterioration and contamination. Marred surfaces, cracked, checked spilt or warped materials will be rejected. Store materials subject to damage by climatic conditions in weathertight enclosures. Maintain temperature and humidity within the ranges or recommended by the manufacturer.

E. Repair or clean items that have been damaged or soiled that can be restored to an "as new" condition at no cost to the Owner. The Owner's Representative shall be the judge of the effectiveness or remedial measures. Additional time or expenses required to secure replacements and to make repairs will not be considered by the Owner's Representative to justify an extension in the Contract time of completion or an increase to the Contract amount.

PART 2 PRODUCTS

2.1 MATERIALS AND FABRICATION

A. *Insulated Doors [D,P,G]:* Fabricate of interlocking, galvanized steel slats of flat profile standard with the manufacturer. Form slats of minimum 22 gage galvanized steel face and backing sheet completely enclosing a polyurethane insulating core to provide a U-rating of 0.2 and that meets the wind resistance requirements specified. Insulation shall comply with maximum flame spread of 75 and smoke developed of 450 per ASTM E 84. Use galvanized steel sheet per ASTM A 653, coating designation G90, zinc coating. Provide malleable iron endlocks on both ends of alternate slats; with integral slat lugs as windlocks, on each slat of

exterior doors; so as to retain the slats in the door guides. Provide weather-stripping on door guides, hood baffle, and door bottom.

1. Atlas Door “Thermal-Door”.
2. Cookson “Insulated Rolling Door”.
3. Cornell Iron Works, Inc. “Thermiser”.
4. Wayne-Dalton Corp. “Thermo-Tite Insulated Door”.
5. Overhead Door Corp. “Stormtite Insulated Slat”.
6. Raynor Garage Doors “IF-Insulated Slat”.
7. Mahon Door Corporation “Insulated Overhead Door”.

B. Bottom Bar: Provide full-width, rolled steel double angle on bottom of each door. Provide a neoprene rubber astragal of tubular profile standard with the manufacturer on the bottom bar for a positive seal when the door is closed. On motor operated doors, incorporate an electric fail safe type safety edge device in the tubular astragal, designed to stop the downward travel of the door instantly and reverse direction to the open position upon contact with any obstruction in the door opening.

C. Guides: Fabricate from standard rolled steel angles, channels, or combinations with plate, not less than $^{3}/_{16}$ inch thick stock, and of sufficient depth to insure retainage of slats in guides. Incorporate locking bar in guide profile to retain slats in the guide by acting against the endlocks. Bolt guides to clip angles with $^{3}/_{8}$ inch diameter minimum size bolts; at labeled doors, provide for expansion and contraction at connection to prevent buckling of guides.

D. Roller Shaft: Fabricate of steel pipe or structural tubular member of sufficient diameter and wall thickness to limit deflection to 0.03 inch per foot of span. Close ends of shaft with cast iron plugs, machined to fit the shaft, and secure with cap screws. Provide an oil-tempered, helical, counterbalancing steel spring in shaft designed for a minimum 100,000 cycles, mounted on the shaft plugs and a tension rod, capable of producing sufficient torque to assure easy operation of door from any position, and to hold the door in any position. Adjust spring tension from outside the roller shaft. Also, labeled door shafts to house an oil-tempered, helical steel spring, secured to same tension rod, capable of producing sufficient torque to start door downward, from any open position, when fusible link mechanism is activated.

E. Brackets: Fabricate from heavy cast iron or steel, designed to form an end closure support for the hood. Fit the operator bracket hub and the plug in the spring end of shaft with self-lubricating bronze bearings or permanently lubricated sealed ball bearings.

F. Hood: Fabricate from 24 gage galvanized sheet steel of same quality specified for slats, to be weathertight and formed to fit the contour of the end brackets and reinforced with stiffening rolls at top and bottom edges. At door widths in excess of 14 feet, provide reinforcing brackets or straps, at proper intervals, to provide rigidity.

G. Locking Device: Furnish as follows:

1. Chain-hoist doors shall be provided with chain keepers suitable for padlocks by Section 08710.

H. Safety Device: Provide each door with safety device to prevent door from falling more than three inches in case of damage to the drive chain, motor operator, or pipe shaft. Provide safety interlock switch on power doors to disengage power supply when door is locked.

2.2 DOOR OPERATION

A. Manual Operation
   1. Chain Operation: Operate each door from interior only, when unlocked, by operating a hand-chain actuated gear-driven power unit. Connect gear driven power unit to door roller shaft, having cast iron gears, and sprocket wheel with endless galvanized steel chain. Provide endless chain of sufficient length to come within two feet of the floor and provide a wall mounted keeper. Design gear reduction unit to reduce pull required on the hand chain to 35 pounds, maximum.

2.3 FINISHES

A. Shop prime-paint all exposed surfaces of doors and door parts, except barrels and the enclosed mechanical parts not usually painted.

B. Shop prime-paint all exposed parts of all types of operators. Cabinets, combination motor starters, safety switches, push button stations, and other items which are provided with an acceptable paint or enameled finish by the manufacturer, will need no further painting. However, handle such items in a manner that the finish is not marred or damaged.

C. Bonderize all exposed galvanized surfaces, or apply galvanized metal primer, as standard with the manufacturer, so that surfaces are in proper condition to receive field painting. Apply one coat of rust-inhibiting metal primer, as standard with the manufacturer, on all other exposed metal surfaces, so that surfaces are in proper condition to receive field painting.

PART 3 EXECUTION

3.1 INSTALLATION

A. Mount, erect and install the doors, and door accessories, per door manufacturer’s written instructions. Do all drilling, tapping, and cutting as required for the complete installation. Secure all parts in place in a rigid manner.

B. Fit doors tightly to sills and jambs; operate door easily and quietly under all conditions. Provide weathertight doors at exterior openings, when door is in the fully close position.

C. Provide all steel framing, not furnished by others, as required for a complete installation.

D. Lubricate bearings and sliding parts; adjust doors to operate easily, free from warp, twist, or distortion and fitting weathertight for entire perimeter.

3.2 FIELD QUALITY CONTROL

A. After doors are installed, test-demonstrate, in the presence of the Owner's maintenance personnel, that the doors operate properly under all conditions and in proper sequence. Adjust doors and operating mechanism if test shows any malfunctioning. Test and adjust as many times as necessary until doors and door operations are correct.

B. Train Owner's maintenance personnel how to adjust, operate and maintain doors.

3.3 DEMONSTRATION

A. Engage a manufacturer-authorized service representative to perform punchlist, operation startup services and to train Owner's maintenance personnel: Test and adjust controls and safety operation. Replace any damaged components, and malfunctioning controls. Train Owner's maintenance personnel of safety procedures shutdown, troubleshooting, servicing, and preventative maintenance. Turnover documented operating and maintenance manuals. Refer to Division 1, General Requirements for O&M manuals and contract closeout.

END OF SECTION

Revision History	
Date	**Rev. No.**
A	0
B	0
C	0
D	0
E	0
F	0
02-19-09	0

DO/djo
C:\d\timsdatasf\brookhaven_national_laboratory\sf070003\200-projexec\280-spec\08331.doc

THIS PAGE INTENTIONALLY LEFT BLANK

SECTION 08341

SOUND CONTROL DOORS AND FRAMES

PART 1 GENERAL

1.1 SUMMARY

A. Section Includes
   1. Sound control doors and frames, including fire-rated, prime painted steel sound retardant door assemblies, rated STC 40 or above, complete, as indicated and specified.

B. Provide sound retardant fixed windows where shown on the Drawings, as specified herein, and as needed for a complete and proper installation.

C. Specific acoustical ratings shall be as scheduled and shown on the architectural Drawings.

D. Provide all steel acoustical doors, door frames, fixed windows, steel cam-lift hinges, neoprene and/or magnetic head and jamb gasketing, door bottoms, threshold, astragals and accessories, as required, to achieve the indicated sound retardant rating. All components shall be the products of one manufacturer. See Section 08710 “Door Hardware” for specified hardware.

E. Thresholds and fasteners: Provide where indicated or required to attain the specified acoustical rating.

F. Related Work Specified In Other Sections
   1. Unit Masonry – Division 4.
   2. Door Hardware - Division 8.
   3. Glazing - Division 8.
   4. Painting - Division 8.
   5. Gypsum Board Assemblies – Division 9.

1.2 PERFORMANCE REQUIREMENTS

A. Requirements Of Regulatory Agencies
   1. Acoustical doors shall bear manufacturer’s label designating sound-rated construction and indicating the acoustical rating of the door assembly.

B. Reference Standards
   1. ASTM E90-81 (or later) - Laboratory Measurement of Airborne Sound Transmission Loss of Building Partitions.
   2. ASTM E336-84 - Measurement of Airborne Sound Insulation in Buildings.
   3. ASTM E413-87 - Classification for Determination of Sound Transmission Class (STC).
   4. NAAMM-HMMA 840-87 - Installation and Storage of Hollow Metal Doors and Frames.
   5. Perform all welding per American Welding Society Specification D1.1.

C. Erector Qualifications
   1. Sound control doors and frames shall be installed by skilled mechanics of a firm approved by the manufacturer and under direct supervision of that manufacturer.

D. Design Criteria
   1. Provide hinged sound control door assemblies, meeting the following design criteria:
      a. Have Sound Transmission Class (STC) rating as noted on Drawings, when tested in accordance with ASTM Standard E90, as an operable assembly.

1.3 SUBMITTALS

A. Furnish submittals for items that are identified in this Section by a different typeface and a bracketed code (e.g., *Item [L]*). Refer to Division 1, General Requirements for definition of codes for types of submittals and the administrative requirements governing submittal procedure. Additional submittal requirements pertaining to this Section are specified herein under this Article.

B. Door Locations and identification: Submit shop drawings, and list the location in building and identification mark for each hollow steel door and frame. Indicate door hardware requirements. Submit manufacturer's printed instructions covering installation of the specified work. Include details of each frame type, sound seals, door bottom, threshold and reinforcements.

C. Product Data: Submit product data, and identify applicable details of design and construction and STC rating of all hollow steel work.

D. Product Test Reports: Provide documented test results from a qualified testing agency indicating sound and fire ratings compliance with the specification.

E. Material Certificates: Certify that all sound control doors comply with the specification requirements. Certification shall be signed by the proposed manufacturer.

F. Test Reports: Document field test results for compliance with specification performance requirements for all sound control door installations.

1.4 DELIVERY, STORAGE AND HANDLING

A. Deliver sound-rated doors, frames and fixed windows wrapped, cartoned and crated as required to provide protection during transit and jobsite storage.

B. Inspect doors upon delivery for damage. Repair and/or replace damaged items as required, at no cost to the Owner.

C. Store doors on raised platforms in a vertical position. Keep stored material loosely covered and protect from damage. Refer to NAAMM-HMMA 840 "Installation and Storage of Hollow Metal Doors and Frames".

D. Repair or clean items that have been damaged or soiled that can be restored to an “as new” condition at no cost to the Owner.

1.5 PROJECT SITE CONDITIONS

A. Examine the door frames, walls, and conditions under which the sound retardant door assemblies are to be installed. Do not proceed with the work until unsatisfactory conditions have been corrected.

PART 2 PRODUCTS

2.1 MATERIALS

A. Steel Sheet
   1. Hot-Rolled Steel Sheets: Commercial quality carbon steel, complying with ASTM A569 and ASTM A568.
   2. Cold-Rolled Steel Sheets: Commercial quality carbon steel, complying with ASTM A366 and ASTM A568.
   3. Galvanized Steel Sheets: Zinc coated carbon steel sheets of commercial quality, complying with ASTM A526, with 1.25 ounce commercial zinc coating, mill phosphatized complying with ASTM A525.
   4. Inserts, Bolts and Fasteners: Manufacturer’s standard units for the required application; hot dip galvanize items to be embedded in or in contact with concrete foundation wall or slab-on-grade.
   5. Primer: Red oxide/zinc chromate primer for interior; zinc dust/zinc oxide primer for galvanized surfaces.
   6. Hinge Finish: Provide cam lift hinges to match finish of Door Hardware specified in Section 08710.

B. Accessories
   1. Provide manufacturer’s standard cam lift hinges, head and jamb seals, thresholds, astragals, door bottoms, and miscellaneous fasteners and accessories, as required, to achieve the STC rating as scheduled and/or shown on the Drawings.
   2. Sound Seals: Appropriate type, as standard with the door manufacturer. Seals shall be type required to attain STC ratings shown and shall include a threshold where required.
   3. Frame Anchors: Galvanized steel, of type standard with the manufacturer, designed for the specified STC ratings. Anchors shall fit frame profile and be of type to be built into adjoining wall construction.
      a. At fire-rated openings, anchors shall conform to the requirements of Underwriters Laboratories Inc.

2.2 FABRICATION AND MANUFACTURER

A. *Sound Control Doors [P,D,T,C]*: Provide sound control metal doors, frames and fixed windows by one of the following acceptable manufacturers.
   1. Sound control metal door, frame and fixed window fabricators:
      a. Krieger Steel Products Co.
      b. Overly Mfg. Co.
      c. Industrial Acoustics Co.

B. Quality of Work
   1. Cut and form joints to hairline tolerances. Make all exposed joints smooth and invisible. Grind all exposed welds smooth and flush. Form all arises sharp and true. Miter all face joints.
   2. Fabricate fire-rated sound control doors and frames in accordance with UL Procedures, and affix appropriate UL label to them. Where UL requirements are more stringent than the requirements specified in this Section, the UL requirements shall govern.
   3. Design and fabricate sound control doors, frames and fixed windows to have STC sound ratings as indicated.

C. Doors
   1. *Sound Control Doors [D,P]:* Provide $1^3/_4$ inch thick (or thicker where required or indicated on the Drawings) flush-design doors fabricated of two outer stretcher-leveled steel sheets not less than 16 gauge; provide cold-rolled sheet for interior doors and galvanized sheet for exterior doors.
   2. Provide sound-insulation filler, solidly packed, full door height, to fill the voids between inner core reinforcing members.
   3. Construct doors with smooth, flush surfaces without visible joints or seams on exposed faces or stile edges.
   4. Reinforce tops, rails, and bottoms of doors with 16 gage horizontal steel channels welded continuously to the outer sheets. For exterior doors, close top and bottom edges to provide weather seal as integral part of door construction or by addition of steel top caps.
   5. Clearances are as follows:
      a. For single doors:
         1) $^1/_8$" between door and head of frame.
         2) $^1/_{16}$" between doors and frame at hinge jamb.
         3) $^1/_8$" between door and frame at strike jamb.
   6. Glass assemblies:
      a. Single glazed vision lights with one of the following types of glass:
         1) $^1/_4$" wire glass for all UL rated doors.

            or

         2) $^1/_4$" laminated glass for all non-labeled doors.
      b. Dual glazed vision lights with one of the following types of glass:
         1) One piece of $^1/_4$" wire glass and one piece of $^3/_8$" laminated glass for all UL rated doors.

            or

2) One piece of $^{1}/_{4}$" laminated glass and one piece of $^{3}/_{8}$" laminated glass for all non-labeled doors.

7. Reinforce doors for required finish hardware as follows, as minimums:
   a. Cam-Lift Hinges: as required by the door manufacturer.
   b. Level-Swing Hinges: 7-gage x $1^{1}/_{4}$ inch wide x 12 inch long bars, secured with not less than four spot welds at each end of the bar.
   c. Lockset and Bolts: 14-gage steel sheet, secured with not less than two spot welds.
   d. Surface-Applied Closers: 12-gage steel sheet, secured with not less than six spot welds.
   e. Push Plates and Bars: 16-gage steel sheet (except when through bolts are indicated or specified), secured with not less than two spot welds.
   f. Surface Panic Devices: 14-gage sheet steel (except when through bolts are indicated or specified), secured with not less than four spot welds.
   g. Automatic-Door Bottoms: Reinforce for mortised-type units with minimum 12-gage steel. Provide recess required for units.
8. Provide door manufacturer's acoustically matching astragals at pairs of doors.
9. Provide flat $^{1}/_{4}$ inch high stainless thresholds where necessary to attain STC rating shown.
10. Fabricate and fit sound retardant metal doors accurately in their respective frames to accommodate the required acoustical edge seals and threshold flush with the finish floor.

D. Frames
1. *Sound Control Frames [P,D,T,C]*: Shall be minimum 16 gage formed sheet steel, with reinforcing and anchors. Frames shall be factory template drilled and tapped for hardware and sealing devices. Frames shall be of profiles shown.
2. Sound control frames shall be of the type that conceal anchors in place. Form stops integral with frames.
3. Shop-fabricate sound control frames of minimum 16 gage steel to attain STC sound ratings as shown. Fabricate frames to true rectangular shape, with the vertical plane formed by the door stops and the face of the frame in parallel planes, and with all parts aligned.

E. Fixed Window Frames
1. *Fixed Window Frames [P,D,T,C]*: Provide from not less than minimum 16 gage material, with glass stops. Provide anchors appropriate for the type of wall construction windows are to be installed in.
2. Provide fixed window frames to attain the Sound Transmission Class (STC) shown, in accordance with ASTM E90 and E413.
3. Frames shall be welded units with integral trim, of the sizes and shapes shown. Knocked-down frames are not acceptable.
4. Windows shall be provided with molding and glass as required by the manufacturer for the model and rating specified.
5. When dual glazed systems are provided, each piece of glass shall be capable of being removed independently.
6. Loose stops shall be manufacturer's standard but not less than 20 gage, with mitered or butt corner joints, secured to the frame by cadmium or zinc-coated screws. Snap-on attachments are not permitted.

F. Finishing
   1. Clean, degrease and “bonderize” hollow metal surfaces prior to finishing. Prime inaccessible surfaces such as inside surfaces of frames and doors, with rust-inhibitive priming paint, before assembly.
   2. Apply one coat of rust-inhibitive primer to exposed surfaces of doors and frames, make surfaces flush and smooth, fill irregularities with one or more coats of mineral filler, and apply another coat of primer. Sand smooth between coats and separately bake-on each coat.

2.3 HARDWARE

A. Provide all hardware required for sound control doors. Hardware shall be as specified in Section 08710 and shall be provided by this manufacturer and shall meet the STC rating shown on the door schedule for that door.

PART 3 EXECUTION

3.1 INSTALLATION

A. Doors And Frames
   1. Install all sound-rated doors, frames, and gasket assemblies in accordance with final approved manufacturer’s instructions and shop drawings. Where frames are anchored with bolts through the face, fill heads with metal putty, grind smooth, and touch-up prime paint.
   2. Coordinate setting of frames with wall construction for correct anchor placement.
   3. Set frames accurately in position, plumbed, aligned and braced securely until permanent anchors are set. After wall construction is complete, remove temporary braces and spreaders, leaving surfaces smooth and undamaged.
   4. Grout door and fixed window frames with USG “Structo-Lite”, Gold Bond “Gypsolite” or similar lightweight gypsum plaster grout or with concrete grout, as recommended by the manufacturer to achieve the required STC rating.
   5. Hang doors and adjust to freely swinging operation without binding, sticking, sagging, or excessive clearances, and to achieve the STC ratings as scheduled.
   6. Install and/or adjust sound seals, door bottoms and accessories in accordance with the manufacturer’s printed instructions. Install thresholds flush with the finish floor.
      a. Do not mount any hardware on the head or jamb seal covers; the manufacturer is to supply special accessory brackets for mounting those items which would normally be attached to the door frame stops.

B. Adjusting And Cleaning
   1. Adjust hardware for smooth and balanced door movement and proper seal. Remove and replace defective work, including doors or frames which are warped, bowed, fall to seal properly, or are otherwise damaged.
   2. Sand smooth any rusted or damaged areas of prime coat, and apply touch-up using compatible air-drying primer.

3.2 FIELD QUALITY CONTROL

A. After doors are installed, test-demonstrate in the presence of the Owner's Representative that the doors operate properly under all conditions. Adjust doors and door hardware if tests show improper functioning.

END OF SECTION

Revision History	
Date	**Rev. No.**
A	0
B	0
C	0
D	0
E	0
F	0
02-19-09	0

DS/djo
C:\d\timsdatasf\brookhaven_national_laboratory\sf070003\200-projexec\280-spec\08341.doc

THIS PAGE INTENTIONALLY LEFT BLANK

SECTION 08710

DOOR HARDWARE

PART 1 GENERAL

1.1 SUMMARY

A. Scope
1. Furnish all door hardware as specified, scheduled, shown, or required for a complete installation.

B. Related Work Specified In Other Sections
1. Casework – Division 6.
2. Astragals as part of a fire rated assembly, Steel Doors and Frames – Division 8.
3. Door silencers as part of a steel door frame, Steel Doors and Frames – Division 8.
4. Astragals as part of a fire rated assembly, Wood Doors – Division 8.
5. Gaskets as part of a sound rated assembly and door silencers as part of a sound rated door frame, Sound Control Doors and Frames – Division 8.
6. Entrance door hardware except cylinders, Aluminum Entrances and Storefronts – Division 8.
7. Hardware for wire mesh doors, except cylinders, Wire Mesh Partitions – Division 10.
8. Door hardware except cylinders, Pre-Engineered Building – Division 13.
9. Intrusion detectors for door switches, Intrusion Detection – Division 13.
10. Electrical rough-in, conduit, junction boxes, wiring, primary power and final hook-up of all finish hardware requiring electrical connections - Division 16.

C. Products Furnished But Not Installed Under This Section
1. Door Hardware furnished in this Section, installed under the following Sections:
   a. Finish Carpentry - Division 6.
   b. Steel Doors and Frames – Division 8.
   c. Aluminum Doors and Frames – Division 8.
   d. Wood Doors – Division 8.
   e. Aluminum Doors and Storefronts – Division 8.
   f. Glazed Aluminum Curtain Walls – Division 8.
   g. Hinged Blast-Resistant Doors – Division 8.
   h. Sound Control Doors and Frames – Division 8.
   i. Security Door Hardware – Division 16.
   j. Final replacement cores and keys to be installed by the Owner.

1.2 QUALITY ASSURANCE

A. Requirements Of Regulatory Agencies
1. Door hardware shall comply with the requirements of laws, codes, ordinances, and regulations of the governmental authorities having jurisdiction. Where such requirements exceed the requirements of the Specifications, use the most stringent.

2. The following codes in the most current editions shall be adhered to for the purposes of determining the correct application of the finish hardware:
3. NFPA 101 “Life Safety Code”, Current Edition.
4. NFPA 80 “Installation of Fire Doors and Windows, Current Edition.
5. BOCA, Current Edition.
6. Local Barrier Free Code, Current Edition.
7. UBC CODE, Current Edition.
8. American with Disabilities Act, Current Edition.
9. UL10C
10. Door hardware to hazardous areas of public buildings shall comply with the requirements of the governmental agencies having jurisdiction. For public building accommodations, door hardware shall comply with the latest governmental laws and regulation for the physically handicapped, including Americans With Disabilities Act of 1990, effective January 26, 1992.
11. All hardware items for listed fire door assemblies shall comply with the requirements of the NFPA Standard No. 80 and shall bear the appropriate label for the opening classification indicated in the Door Schedule, and shall also comply with the requirements of the State Fire Marshall or other authorities having jurisdiction. NFPA requirements shall take precedence over all other provisions of this section.
12. Where emergency exit devices are required on fire-rated doors that carry supplementary marking on the doors UL labels indicating "fire door to be equipped with fire exit hardware" provide UL label on exit devices indicating "Fire Exit Hardware".
13. Finish hardware supplier shall be a factory authorized distributor for all products required, and shall have display samples, inventory, and qualified personnel trained and experienced in preparing Hardware Schedules, issuing templates, ordering, furnishing, and servicing finish hardware for architecturally designed projects, and located within one hour travel time of the project.
14. Prior to commencement of the Hardware Supplier’s development of the Hardware Schedule, a Finish Hardware Meeting will be held at the Architect-Engineer’s office. The Contractor and the Hardware Supplier’s personnel directly responsible for preparing the Hardware Schedule shall meet with the Architect-Engineer and the Architect-Engineer’s Hardware Consultant. Attendance at this meeting is mandatory. Purpose of the finish hardware meeting is to review the Contract Documents’ hardware schedule requirements and will include, but not be limited to, the following:
    a. Review specification requirements for Hardware Schedule, formats, hardware locations, opening descriptions, and other information specified.
    b. Hardware Supplier shall distribute, at the meeting, samples of schedules from other projects of similar nature prepared by the same person as will prepare schedule for this project.
15. Preinstallation Meeting: Before hardware installation, Contractor shall request a hardware installation seminar be conducted on the installation of hardware; specifically of locksets, closers, exit devices, overhead stops and coordinators. Manufacturer’s Representatives of the above products to present seminar. Seminar to be held at job site and attended by installers of hardware for aluminum, hollow metal and wood doors. Seminar to address proper coordination and installation of hardware, per finish hardware schedule for this specific project by using installation manuals, hardware schedule, templates, physical product samples and installation video’s.

1.3 SUBMITTALS

A. Furnish submittals for items that are identified in this Section by a different typeface and a bracketed code (e.g., *Item [L]*). Refer to Division 1 General Requirements for definition of codes for types of submittals and the administrative requirements governing submittal procedure. Additional submittal requirements pertaining to this Section are specified under this Article.

B. *Hardware Schedules [D]:* Submit proper number of Hardware Schedules to allow the Architect-Engineer to retain two copies for his use, plus the number of copies required by the Contractor for his distribution and use. But, in any event, do not submit more than six copies. Include the following:

1. Door Index: Provide using Architects door numbers, hardware set numbers and page numbers where hardware is listed.
2. Preface sheet listing category only and manufacturers' names of items being furnished, as follows:

CATEGORY	SPECIFIED	SCHEDULED
Hinges	Manufacturer A	Manufacturer B
Locksets	Manufacturer X	Manufacturer X
Kick Plates	Open	Manufacturer Z

3. Hardware Locations: Refer to Article LOCATIONS.
4. Opening Description: Single or pair, number, room locations, hand, active leaf, degree of swing, size, material, frame material, and UL Listing.
5. Hardware Description: Quantity, category, product number, fasteners, and finish.
6. Headings that refer to the specified Hardware Set Numbers.
7. Scheduling sequence shown in Hardware Sets and as outlined in "Sequence and Format for the Hardware Schedule" published by DHI.
8. Product data of each hardware item, and shop drawings where required, for items to be connected to the electrical or fire alarm systems complete with power requirements and wiring diagrams and for other special conditions and specialty hardware.
9. "Vertical" scheduling format only. "Horizontal" schedules will be returned without review noted "RESUBMIT".
10. Typed copy.
11. Double spacing.
12. $8^1/_2$ x 11 inch sheets.
13. U. S. Standard or B.H.M.A. finish symbols.

C. *Hardware Schedule Product Data [P]:* Submit product data concurrently with Hardware Schedule. Submit in booklet form, using Supplier's Hardware Schedule covers as binders.

D. Upon return of the reviewed finish hardware schedule, hardware supplier shall arrange for a keying meeting with the Owner's Representative, hardware supplier, and other involved parties to insure all locksets are functionally correct and keying fulfills the project requirements. As soon as possible after the keying conference, typed copies of the keying schedule shall be furnished to the Owner's Representative.

E. *Electrical Equipment Schedule [D]:* In addition to the finish hardware schedule, provide complete set of riser and installation drawings for all electrically controlled or operated hardware equipment. Drawing should include relationship of all related equipment, mounting locations, wire type and size, voltage and current requirements. Documentation shall include function, operation characteristics of all equipment and point to point termination of all wires.

F. Warranty: All products supplied on project shall be warranted by manufacturer against defect in materials and workmanship for at least one year from date of substantial completion. The defective product shall be replaced promptly, free of charge to the Owner, and installed by a factory representative. Defective products shall be returned to Hardware Supplier after replacement. Warranties shall be supplied as follows:
   1. Closers: Ten years, minimum.
   2. Exit Devices: Three years minimum.
   3. Hinges: Life of building.
   4. Mortise Locks: One year.
   5. Miscellaneous Hardware: One year.

1.4 DELIVERY, STORAGE, AND HANDLING

A. Label each item of hardware with the appropriate door number and Hardware Schedule heading number, and deliver individually packaged hardware items at the proper times to the proper locations (shop or project site) for installation.

1.5 CERTIFICATIONS

A. The Architectural Hardware Consultant or equivalent in the employ of the hardware supplier shall inspect and certify that all hardware has been furnished and installed in accordance with manufacturer's instructions and as specified herein, and is functioning properly.

B. Provide two copies of certification to the Architect-Engineer.

1.6 COORDINATION

A. Provide and distribute templates for shop preparation of door hardware. Review shop drawings of related work and indicated requirements to properly locate and install door hardware.

B. Provide a coordinated layout for electrical system rough-in of electrified door hardware connections for (power) (fire alarm and detection systems) (security access) (building controls.).

1.7 MAINTENANCE SERVICE

A. Provide instructions for maintenance and special tools for continued hardware maintenance.

PART 2 PRODUCTS

2.1 SCHEDULED DOOR HARDWARE

A. General: Provide door hardware complying with requirements specified in this Section, the door set indicated in the door schedule and the hardware schedule as per Part 3 in this section.

B. Furnish each category with the products of only one manufacturer, unless specified other; this requirement is mandatory whether various manufacturers are listed or not.

C. Furnish hinges, continuous hinges, electric hinges, pivot sets, electric pivots, roller latches, exit devices, push and pull hardware, closers, overhead holders, kickplates, armor plates, door edgings, bumpers, stops, seals, automatic door bottoms, bottom seals, weather-stripping and thresholds for both leaves of pairs and batteries of doors unless specified otherwise.

D. Provide the products of manufacturer designated or if more then one manufacturer is listed, the comparable product of one of the other manufacturers listed. Where only one manufacturer or product is listed, “no substitution” is implied.

2.2 HINGES

A. Hinges: Furnish class 5BB1 and size $4^1/_2$ x $4^1/_2$ inches, unless specified otherwise. Numbers specified are Ives.
   1. Equal products of any B.H.M.A. member will also be acceptable.

B. Hinge Sizes unless specified otherwise:
   1. Doors up to and including 36 inches wide. $4^1/_2$ x $4^1/_2$ inches.
   2. Doors 38 inches to 48 inches wide. Use continuous gear hinges (Section 2.3).

2.3 CONTINUOUS GEAR HINGE

A. 6063-T6 aluminum alloy, anodized finish (cap on entire hinge painted if specified). Manufacture to template, uncut hinges non-handed, pinless assembly, three interlocking extrusion, full height of door and frame, lubricated polyacetal thrust bearing, fasteners 410 stainless steel plated and hardened.

B. Length: 1” less than door opening height. Fastener 12-24 x 1/2” #3 Phillips keen form self tapping at aluminum and hollow metal doors, 12-1/2” #3 Phillips, flathead full thread at wood doors.

C. Furnish fire rated hinges at labeled opening. Pins or studs are not acceptable.

D. Unless specified otherwise in sets furnish continuous gear hinges as follows:
   1. Aluminum and F.R.P. Doors: SL11-HD
   2. Wood and hollow metal doors: SL24-HD
   3. Lead Lined doors: SL24-LL

E. Numbers used are Select Products, Ltd., Kalamazoo, Michigan. Equal products by Ives, Markar, McKinney or Pemko are also acceptable.

2.4 FLUSH BOLTS

A. Automatic Flush Bolts: Products listed in sets are Ives FB series.
   1. Equal products of any B.H.M.A. member will also be acceptable.

2.5 LOCKSETS AND LATCHSETS

A. Mortise Locksets and Latchsets; Lever Trim: At lead lined doors, furnish lead wrapped case. Locks shall meet ANSI 156.13 Series 1000, Operational Grade 1, Security Grade 1 and be listed by UL. Curved lip type, shall be furnished with all locks and latches.

B. Products listed in sets are Schlage L9000 series with 17A lever trim.
   1. Sargent 8200
   2. Best 45H

C. Strikes shall be furnished with extended lips where required to protect trim from being marred by latch bolts. Strike lips shall be furnished which do not project more than $^{1}/_{8}$ inch beyond door frame trim at single doors and have $^{7}/_{8}$ inch lip to center at pairs of $1^{3}/_{4}$ inch doors.

2.6 LOCK GUARDS

A. Lock Guards: Finish US32D
   1. Ives LG10
   2. MarKar M-930-LG-SS
   3. Precision 1625

2.7 EXIT DEVICES

A. Exit Devices: Furnish specified outside trim. Function designations are Von Duprin 98 series.
   1. Sargent 80 series
   2. Precision Apex series

2.8 PUSH AND PULL HARDWARE

A. Push Plates: Plain design, wrought, 6 x 16 x 0.050 inches, square corners, beveled edges. If stile widths will not accept 6 inches, furnish stile width less two inches.

B. Pull Plates: Plain design, with wrought plate 4 x 16 x 0.050 inches, square corners, beveled edges; 1 inch round rod, straight grip with 10 inch centers with 2-1/2 inch clearance.

C. Furnish Push and Pull Hardware from any member of B.H.M.A.

2.9 COORDINATORS

A. Face Mounted Coordinators: Gravity type by any member of B.H.M.A.

B. Stop Mounted Coordinators: Furnish fillers for full jamb openings and mounting brackets for stop-applied hardware. Provide special notching for concealed exit device top bolt latch trigger release device. Products listed in sets are Ives COR series.
   1. Equal products of any B.H.M.A. member will also be acceptable.

2.10 CLOSERS

A. Closers: All closers shall meet or exceed ANSI A.156.4 Grade 1 Certification.
   1. Review the door frame and plan details to determine the proper length of arm and the degree of swing. Indicate the degree of swing in the hardware schedule.
   2. Provide manufacturer's minimum 10 year warranty on closers against manufacturing defects and workmanship.
   3. Closers shall be inspected and adjusted by the Factory Representative after installation and after the HVAC System is in operation to insure proper adjustment in operation. The Manufacturer's Representative shall prepare written report stating compliance, and also record locations and kind of non-compliance. The original report shall be forwarded to the Architect-Engineer with a copy to the Owner's Representative and Hardware Distributor.
   4. Provide one shoe support with each closer 4111, where required. When used with stop-applied weather-stripping, provide special shoe or stop spacer for arm to pass below stop and weather-stripping.
   5. Door closers shall have fully hydraulic, full rack and pinion action with a high strength cast iron cylinder. Cylinder body shall be 1-1/2" in diameter, and double heat treated pinion shall be 11/16" in diameter with double D slab drive arm connection.
   6. Hydraulic fluid shall be of a type requiring no seasonal closer adjustment for temperatures ranging from 120 degrees F to –30 degrees F and shall meet UL10-C requirements for positive pressure testing.
   7. Spring power shall be continuously adjustable over the full range of closer sizes, and allow for reduced opening force for the physically handicapped. Hydraulic regulation shall be by tamper-proof, non-critical valves. Closers shall have separate adjustment for latch speed, general speed, and backcheck.
   8. All closers shall have solid forged steel main arms (and forged forearms for parallel arm closers).
   9. All surface mounted mechanical closers shall be certified to exceed ten million (10,000,000) full load cycles by a recognized independent testing laboratory.
   10. Powder coating finish to be certified to exceed 100 hours salt spray testing by ETL, an independent testing laboratory used by BHMA for ANSI certification.
   11. Refer to door and frame details and furnish accessories such as drop plates, panel adapters, spacers and supports as required to correctly install door closers. State degree of door swing in the hardware schedule.

B. Products listed in sets are LCN 4000 Smoothie series.
   1. Sargent 281 series

C. In all cases provide fasteners as required to meet "UL" requirements.

2.11 OVERHEAD HOLDERS AND STOPS

A. Type, function, and fasteners must be the same as Glynn-Johnson specified. Size per manufacturer's selector chart. Plastic end caps, hold open mechanisms and shock blocks are not allowed. End caps must be finished same as balance of unit.

B. Manufacture products using base material of Brass/Bronze for US3, US4 and US10B finished products and 300 Stainless Steel for US32 and US32D finished products.

C. Type, function, and fasteners must be the same as Glynn-Johnson specified. Size per manufacturer's selector chart.
   1. Glynn-Johnson
   2. ABH
   3. Rockwood
   4. Rixson

2.12 KICK PLATES

A. Kick Plates: Furnish 10 x 0.050 inches x door width less 2 inches at single doors and less one inch at pairs. Where glass or louvers prevent this height, supply with height equal to height of bottom rail less two inch. When specified to be installed above surface mounted automatic door bottoms, deduct height of door bottoms. Drill and countersink screw holes for oval head undercut screws. Install to within $^{1}/_{4}$ inch of the door bottom. Bevel three edges.

2.13 WALL STOPS

A. Wall Stops: Furnish with pictorial installation instructions illustrating downward slope of diagonal side.
   1. H.B. Ives – WS33

2.14 WEATHER-STRIPPING

A. Weather-stripping: Apply at head and jamb stops.

B. Numbers specified are National Guard. Products from other manufacturers are acceptable if equal in material, shape, thickness, and contain equal gasket material.
   1. National Guard
   2. Pemko
   3. Reese

2.15 SWEEPS

A. Sweeps: Apply at door bottom, hinge side.

B. Numbers specified are National Guard. Products from other manufacturers are acceptable if equal in material, shape, thickness, and contain equal gasket material.
   1. National Guard
   2. Pemko
   3. Reese

2.16 THRESHOLDS

A. Thresholds: Numbers specified are National Guard. Products from other manufacturers are acceptable if equal in material, shape, thickness, and contain equal bumper gaskets and foot seals.

B. Thresholds of sufficient width to project beyond faces of doors and frames shall be coped around frame and mullion stops and faces, equal in length to full masonry openings, excluding side lights, when faces of frames are not flush with adjacent walls.

C. When faces of frames are flush with adjacent walls, such thresholds shall be coped similarly at stops and mullions but not in front of faces of frames.

D. Thresholds without projection shall be equal in length to door openings and coped at frame and mullion stops only.

E. Furnish thresholds with floor closers.

F. Furnish one unit or assembly per door opening, at batteries, butted together with only hair line joints.

G. Furnish National Guard 425 unless listed otherwise in sets.

2.17 KEY CABINET

A. Key Cabinet: TelKee WC Series with key loan record system, preindexed by this supplier, who shall instruct Owner in usage and maintenance of key records. Accommodate all keys under this Contract, plus 50% future expansion.

2.18 MISCELLANEOUS

A. Furnish items not categorized in the above descriptions but specified by names in Hardware Sets.

2.19 FASTENERS

A. Furnish fasteners of the proper type, size, quantity, and finish. Use machine screws and expansion shields for attaching hardware to concrete or masonry, and wall grip inserts at hollow wall construction. Supply sex bolts for closers at lead-lined or UL Listed wood doors only. Supply sex bolts when UL listing of wood doors requires them. Furnish machine screws for attachment to reinforced hollow metal doors and frames and reinforced aluminum doors and frames. Furnish full thread wood screws for attachment to solid wood doors and frames. “TEK” type screws are not acceptable.

2.20 FINISHES

A. Generally, Satin Chrome, US26D. Furnish finish for each item as indicated in sets.

2.21 TEMPLATES AND HARDWARE LOCATION

A. Furnish hardware made to template. Supply required templates and hardware locations to the door and frame manufacturers.

B. No mortising will be required for channel iron frames.

C. Refer to Article LOCATIONS and coordinate with templates.

2.22 CYLINDERS AND KEYING

A. Provide an IC core cylinder for all hardware components capable of being locked.

B. Provide cylinders factory master and grand master keyed to the existing grand master system, according to Owner's instructions. Provide two change keys for each cylinder, three master keys for each master key set, and three grand master keys for system.

C. Provide cylinders with construction keying for use during the construction period. When so directed, and in the presence of the Owner's security department or representative, convert construction cores to final cores.

D. Provide construction master keys as required by Contractor.

E. Furnish visual key control - stamp key bows only with key set symbol.

PART 3 EXECUTION

3.1 INSTALLATION

A. General
   1. Install hardware according to manufacturers installations and to manufacturers template dimensions. Attach all items of finish hardware to doors, frames, walls, etc. with fasteners furnished and required by the manufacturer of the item.
      a. Reinforced hollow metal doors and frames and reinforced aluminum door and frames: drilled and tapped machine screws.
      b. Solid wood doors and frames: full thread wood screws. Drill pilot holes before inserting screws.
      c. Continuous gear hinges attached to hollow metal doors and frames and aluminum doors and frames: 12-24 x 1/2" #3 Phillips Keenform self tapping. Use #13 or 3/16 drill for pilot.
   2. Continuous Gear Hinges require continuous mortar guards of foam or cardboard 1/2" thick x frame heights, applied with construction adhesive.
   3. Refer to Article "Cylinders And Keying" hereinbefore regarding conversion of construction cores to final cores.
   4. Install weather-strip gasket prior to parallel arm closer bracket, rim exit device or any stop mounted hardware. Gasket to provide a continuous seal around perimeter of door opening. Allow for gasket when installing finish hardware. Door closers will require special templating. Exit devices will require adjustment in backset.

B. Locations
   1. Dimensions are from finish floor to center line of items. All dimensions shall meet current heights applicable for the handicapped.
   2. No mortising will be required for steel channel or tube steel frames.
   3. Include this list in Hardware Schedule

CATEGORY	DIMENSION
Electric Hinges	Center Hinge
Hinges	Door Manufacturer's Standard
Levers	$40^{5}/_{16}$" C/L of Strike
Exit Device Touch Bars	Manufacturer's Template
Push Plates	45" C/L
Pull Plates	40" C/L Pull portion
Wall Stops	At Head

C. Quantities
   1. Furnish one hinge for each 30" of door height, or fraction thereof, except where quantities are specified otherwise.
   2. Furnish one additional intermediate pivot for doors over 90".
   3. Furnish hinges, electric hinges, pivot set, exit devices, push and pull hardware, closers, overhead holders, kick plates, armor plates, door edgings, bumpers, stops, seals, automatic door bottoms, weather-stripping and thresholds for both leaves of pairs unless specified otherwise.

D. Protection
   1. Protect all items of hardware until the Owner accepts the project as complete.

E. Inspection
   1. After installation has been completed, hardware supplier shall have a qualified hardware consultant (member of DHI) inspect the job to determine that the correct hardware has been furnished, installed and is operating properly and is in accordance with the approved hardware schedule and keying schedule. Also, check the operation and adjustment of all hardware items and instruct the Owner's personnel in the care, adjustment and maintenance of the hardware.

F. Adjusting and Cleaning
   1. At final completion, all hardware shall be left clean and free from disfigurement. Make a final adjustment to all door closers and other items of hardware. Where hardware is found defective, repair or replace or otherwise correct as directed.
   2. Provide the services of a representative to inspect material furnished and its installation and adjustment, to make final hardware adjustment, and to instruct the Owner's personnel in adjustment, care, and maintenance of the hardware.
   3. Locksets, closers and exit devices shall be inspected by the factory representative and adjusted after installation and after the HVAC system is in operation, to insure correct installation and proper adjustment in operation. The manufacturer's representative shall prepare a written report stating compliance, and also recording locations and kinds of noncompliance. The original report shall be forwarded to the Architect-Engineer with copies to the Contractor, hardware distributor, hardware installer and building Owner.

3.2 HARDWARE SETS

HW SET: 1

6	EA	HINGE	5BB1 4.5 X 4.5	652	IVE
1	EA	AUTO FLUSH BOLT	FB31T	630	IVE
1	EA	PASSAGE SET	L9010 17A	626	SCH
2	EA	SURFACE CLOSER	4111 SCUSH	689	LCN
2	EA	KICK PLATE	8400 10" X 1" LDW	630	IVE
1	SET	SEALS	133NA	AL	NGP
1	EA	ASTRAGAL SEAL	114NA	AL	NGP
1	EA	DOOR SWEEP	202NA	AL	NGP
1	EA	THRESHOLD	211	AL	NGP

HW SET: 2

3	EA	HINGE	5BB1 4.5 X 4.5	652	IVE
1	EA	PASSAGE SET	L9010 17A	626	SCH
1	EA	SURFACE CLOSER	4111 SCUSH	689	LCN
1	EA	KICK PLATE	8400 10" X 1" LDW	630	IVE
1	SET	SEALS	133NA	AL	NGP
1	EA	DOOR SWEEP	202NA	AL	NGP
1	EA	THRESHOLD	211	AL	NGP

HW SET: 3

1	EA	CONTINUOUS HINGE	SL24 HD	628	SEL
1	EA	PANIC HARDWARE	98NL	626	VON
1	EA	SURFACE CLOSER	4111 SCUSH X ST-1586	689	LCN
1	EA	KICK PLATE	8400 10" X 34"	630	IVE
1	SET	SEALS	700NA	AL	NGP
1	EA	DRIP CAP	16A	AL	NGP
1	EA	DOOR SWEEP	C627A	AL	NGP
1	EA	THRESHOLD	425	AL	NGP

HW SET: 4

1	EA	CONTINUOUS HINGE	SL24 HD	628	SEL
1	EA	STOREROOM LOCK	L9080BDC 17A	626	SCH
1	EA	SURFACE CLOSER	4111 SCUSH X ST-1586	689	LCN
1	EA	KICK PLATE	8400 10" X 34"	630	IVE
1	SET	SEALS	700NA	AL	NGP
1	EA	DRIP CAP	16A	AL	NGP
1	EA	DOOR SWEEP	C627A	AL	NGP
1	EA	THRESHOLD	425	AL	NGP

HW SET: 5

3	EA	HINGE	5BB1 4.5 X 4.5	652	IVE
1	EA	STOREROOM LOCK	L9080BDC 17A	626	SCH
1	EA	SURFACE CLOSER	4111 SCUSH	689	LCN
1	EA	KICK PLATE	8400 10" X 34"	630	IVE

HW SET: 6

3	EA	HINGE	5BB1 4.5 X 4.5	652	IVE
1	EA	PRIVACY SET	L9040 17A L583-363	626	SCH
1	EA	SURFACE CLOSER	4011	689	LCN
1	EA	KICK PLATE	8400 10" X 34"	630	IVE
1	EA	WALL STOP	WS33	626	IVE

HW SET: 7

3	EA	HINGE	5BB1HW 4.5 X 4.5	652	IVE
1	EA	PUSH PLATE	8200 6" X 16"	630	IVE
1	EA	PULL PLATE	8303-0 4" X 16"	630	IVE
1	EA	SURFACE CLOSER	4011	689	LCN
1	EA	KICK PLATE	8400 10" X 34"	630	IVE
1	EA	WALL STOP	WS33	626	IVE

HW SET: 8

3	EA	HINGE	5BB1 4.5 X 4.5	652	IVE
1	EA	PANIC HARDWARE	98NL-F	626	VON
1	EA	SURFACE CLOSER	4111 SCUSH	689	LCN
1	EA	KICK PLATE	8400 10" X 34"	630	IVE
1	SET	SEALS	2525B	BRN	NGP

END OF SECTION

Revision History	
Date	**Rev. No.**
A	0
B	0
C	0
D	0
E	0
F	0
02-19-09	0

DS/djo
C:\d\timsdatasf\brookhaven_national_laboratory\sf070003\200-projexec\280-spec\08710.doc

THIS PAGE INTENTIONALLY LEFT BLANK

SECTION 09250

GYPSUM BOARD

PART 1 GENERAL

1.1 SUMMARY

A. Section includes gypsum board work, metal studs and channels, fasteners, accessories, and finishing.

B. Provide gypsum board work as scheduled, noted or detailed, using materials and construction methods as described in the referenced specifications and standards, except as modified by the requirements of this Section. The work includes gypsum board as a finished plane ready for decorative field painting, and as substrate to receive applied finishes such as vinyl fabric wallcovering, ceramic tile, etc.

C. Provide fire-resistance rated metal stud and gypsum board partitions as scheduled or noted using materials and construction methods as described for each particular rating in the UL "Fire Resistance Directory" for the UL Design Number selected.

D. Provide fire-resistance rated gypsum board shaftwall systems as an alternate sytem for erection from outside the stair shaft at each floor, using materials and construction methods as described for each particular rating in the UL "Fire Resistance Directory" for the UL Design Number selected.

E. Provide moisture resistant gypsum board partitions as scheduled or noted using methods as specified in the manufacturer's specification when tested in accordance with each particular system.

F. Cement Backer Board Work:
   1. Provide cement backer board as specified or noted in lieu of gypsum board for partitions and ceilings to receive ceramic tile. Joint taping and filling is in Section 09300.

G. Related Work Specified in Other Sections
   1. Wood framing, furring and permanent wood grounds - Division 6.
   2. Sound-attenuating blanket insulation and thermal insulation in conjunction with gypsum board work - Division 7.
   3. Calking of expansion, control and perimeter area joints - Division 7.
   4. Fire Safing and Firestopping – Division 7.
   5. Gypsum plaster work, complete – Division 9.
   6. Ceramic tile work, including setting beds – Division 9.
      a. Also including taping and filling of joints in cement backer board.
   7. Acoustical ceilings, except gypsum backer board substrate for adhesive-applied acoustical ceiling tile – Division 9.

H. Products Installed But Not Furnished Under This Section
   1. Steel door and glazing frames in metal stud framed gypsum board partitions - furnished in Division 8.
   2. Access panels required in gypsum board work but not shown on the Drawings - furnished in DIVISIONS 15 and 16.
   3. Access panels in gypsum board work shown on the Drawings - furnished in Division 8.

1.2 PERFORMANCE REQUIREMENTS

A. Reference Standards
   1. New York State Building Code, Current Edition.
   2. ASTM C36 – Gypsum Wallboard.
   3. ASTM C645 – Non-Load Bearing Steel Studs.
   4. ASTM C475 – Joint Treatment Materials.
   5. ASTM C1002 – Steel Drill Screws for Application of Gypsum Sheet Materials.
   6. Underwriters Laboratories (UL) Fire Resistance Directory.

B. Design Criteria
   1. The ceiling support system shall limit deflection of the finished ceiling to not more than 1/360 of the span.
   2. The finished ceiling shall be at the correct elevation and flat within 1/8 inch in 10 ft., tested in any direction.

C. Pre-Installation Meeting
   1. Prior to start of each type of gypsum drywall system, and at the direction of the Owner's Representative, meet at the site and review the installation procedures and coordination with other work. Meeting shall include Contractor, Owner's Representative, and major material manufacturers as well as the Installer and other subcontractors whose work must be coordinated with the gypsum drywall work.

1.3 SUBMITTALS

A. Furnish product data for items that are identified in this Section by a different typeface and a bracketed code (e.g., *Item [P]*). Refer to Division 1, General Requirements for definition of codes for types of submittals and the administrative requirements governing submittal procedure.

1.4 PRODUCT DELIVERY, STORAGE AND HANDLING

A. Wrap, carton, and crate as required to provide physical and climatic protection during loading, shipping and job site storage and handling.

B. Deliver packaged materials to the project site in the manufacturer's original, unopened containers which bear intact, legible and visible labels that identify the manufacturer's name and brand name, the contents, grade and type.

C. Upon delivery, immediately inspect shipments to assure their compliance with the requirements of the Contract Documents and approved submittals, and that products are complete, undamaged and adequately protected. Immediately report damaged, missing, or defective items. Remove broken, damaged or unlabeled items from the site immediately.

D. Store products in accordance with manufacturer's instructions with seals and labels intact, legible, and visible. Store products in a manner to prevent damage, soiling, theft, deterioration and contamination. Marred surfaces, cracked, checked split or warped materials will be rejected. Store materials subject to damage by climatic conditions in weather tight enclosures. Maintain temperature and humidity within the ranges required or recommended by the manufacturer.

E. Repair or clean items that have been damaged or soiled that can be restored to an "as new" condition at no cost to the Owner. The Owner's Representative shall be the judge of the effectiveness of remedial measures. Additional time or expenses required to secure replacements and to make repairs will not be considered by the Owner's Representative to justify an extension in the Contract time of completion or an increase in the Contract amount.

1.5 PROJECT SITE CONDITIONS

A. Environmental Conditions
   1. Apply adhesives and joint finishing compounds only under conditions conducive to a fault-free installation and only when the ambient temperature is above 55 degF.
   2. After adhesives and compounds have been installed, provide a circulation of air with exhaust to the exterior, while the adhesives and compounds are drying, including areas above the suspended ceilings.

B. Protection
   1. Protect other adjacent in-place finished construction during the execution of this work to prevent damage to such finished construction; repair all damage.
   2. Immediately remove adhesive and joint finishing compound droppings from in-place finished construction, so as not to mar or damage such finished construction.

C. Sequencing, Scheduling
   1. Cooperate in the sequence of thermal and acoustic insulation installation and setting of mechanical, electrical and other items in or behind gypsum board surfaces.
   2. Do not commence work that would conceal items or materials in-place that require inspection until such has been inspected and approved.

D. Verification of Work by Others
   1. Examine all surfaces affected by this specification section before starting work. Notify the Owner's Representative, in writing, of any surfaces that are not square, plumb, level and true, or that are not secure and firm. Do not proceed with work on any portions so reported until necessary corrections have been made. Any subsequent claim of the inability to carry out the contract, due to the negligence of other Contractors in the execution of their work or their failure to properly execute their work, shall be held invalid.

PART 2 PRODUCTS

2.1 MATERIALS

A. Ceiling Carrying Channels [P]

1. Carrying Channels: Per ASTM C754; cold rolled steel shapes, shop painted with rust-inhibitive primer or galvanized.
   a. Galvanize for exterior soffits.

B. Furring Channels [P]

1. Screw-Type Rigid Furring: Per ASTM C645; galvanized sheet steel, hat shaped, minimum 25 gage, nominal 2-5/8 inches wide x 7/8 inch deep with 1/2 inch wide flanges.
   a. National Gypsum “Gold Bond Screw Furring Channel”
   b. Unimast “DWC Metal Furring Channel”
   c. United States Gypsum “Metal Furring Channel”
2. Screw-Type Resilient Furring: Per ASTM C645; galvanized sheet steel, minimum 25 gage, offset flange profile with minimum 1-1/2 inch wide screw-receiving face.
   a. National Gypsum “Resilient Furring Channel”
   b. Unimast “RC-1 Resilient Channel”
   c. United States Gypsum “Resilient Channel”
3. Z-Shaped Furring: Per ASTM C645; galvanized sheet steel, minimum 24 gage, with nominal 3/4 inch wide back flange and 1-1/4 inch wide face flange and of same depth as the insulation.
   a. National Gypsum “Gold Bond Z Furring Channel”.
   b. Unimast “Z-Furring Channel”
   c. United States Gypsum “Z-Furring Channel”

C. Metal Studs [P]

1. Metal Studs: Steel studs per ASTM C645, minimum No. 25 gage cold-rolled steel with galvanized finish, of sizes required to produce overall partition thicknesses shown or scheduled, suitable for screw attachment of gypsum board and with punchouts to accommodate horizontal utility service runs.
   a. Use 20 gage studs adjacent to door frame jambs.
   b. Use 20 gage studs for cementitious backer board.
2. Accessories: Furnish manufacturer’s standard galvanized mating floor and ceiling tracks, and all other accessories necessary for installation of studs and tracks.

D. Gypsum Board [P]

1. Gypsum Board of type listed, 5/8 inch thick unless indicated otherwise, 48 inches wide, with tapered edges; furnish in as long lengths as practical to minimize end joints. Use the following types where indicated or specified:
   a. Type X: Per ASTM C36, special fire-retardant; use for fire-rated partitions and ceilings, and gypsum board fire-proofing work as defined in the UL “Fire Resistance Directory”.
   b. Moisture-Resistant Type: Per ASTM C630.
   c. Exterior Soffit Board Type: Per ASTM C931.

d. Gypsum Coreboard Type: Per ASTM C442, Type X, 1 inch thick; use as liner for fire-rated gypsum board shaftwall systems.
e. Plain Type: Per ASTM C36; use where other types are not specifically indicated.

E. Cement Backer Board [P]

1. Cement Backer Board: 1/2 inch thick, glass-mesh reinforced portland-cement based (not gypsum) cementitious tile backer board for application of ceramic tile in wet areas. Use where indicated. Joint taping and filling is by the ceramic tile trade of Section 09300.
   a. Custom Building Products "Wonderboard Backerboard".
   b. FinPan "Util-A-Crete Concrete Backerboard".
   c. U.S. Gypsum "Durock Cement Board".

F. Moisture Resistant Panels [P]

1. Moisture Resistant Panels: 5/8 inch thick, 40 inches wide with tapered edges.
   a. National Gypsum "Gold Bond MR Board"
   b. United States Gypsum "Sheetrock Water Resistant Panels"

G. Joint Treatment Materials [P]

1. Joint Compound and Joint Tape: Products of a single manufacturer, as manufactured or recommended by the gypsum board manufacturer for the particular type of gypsum board used, and per ASTM C475.

H. Adhesive [P]

1. For laminating gypsum board work, or for adhering to concrete or masonry substrate, provide adhesive or laminating compound as recommended by the gypsum board manufacturer.
2. For adhering gypsum board to rigid insulation, provide one of the following:
   a. Low VOC type to meet LEED NC 2.2.

I. Hangers And Tie Wire [P]

1. Hangers: Per ASTM C754; soft-annealed, zinc coated steel wire of No. 8 gage minimum; or unperforated, galvanized mild steel flat hangers, 1 inch x 1/8 inch minimum.
2. Tie Wire: Per ASTM C754; annealed zinc coated steel, Monel or stainless steel wire, minimum No. 16 gage.

J. Metal Accessories [P]

1. Furnish all members per ASTM C1047, of proper depth required for total gypsum board thickness specified.
   a. Gold Bond (National Gypsum Co.)
   b. Unimast Inc.
   c. United States Gypsum Co.
2. Casing Bead: Galvanized steel, minimum No. 26 gage, square angle or channel nose, with perforated wall flange requiring filling compound.
3. Corner Bead: Galvanized steel, minimum 26 gage, perforated wing type requiring filling compound.
4. Control Joint: Zinc V-type with perforated wings requiring filling compound.

K. Fasteners [P]

1. Screws: Per ASTM C1002; Type S for 25 gage steel studs and Type S-12 for 20 gage or heavier steel studs, bugle-head screws with self-drilling point, self-tapping thread; not less than 1 inch long for single layer application and not less than 1-5/8 inch long for double layer.
   a. Use same length screws as used to achieve fire-resistant ratings, for such work.
   b. Use corrosion-resistant treated screws for cement backer board.

L. Acoustical Sealant [P]

1. Acoustical Sealant: Per ASTM C919, nondrying, nonhardening, nonskinning acoustical sealant, such as:
   a. Tremco "Acoustical Sealant"
   b. U.S. Gypsum "Sheetrock Acoustical Sealant"
   c. Pecora Corporation "AC-20 FTR Acoustical and Insulation Sealant"

PART 3 EXECUTION

3.1 METAL STUD FRAMING INSTALLATION

A. Provide metal stud framing per ASTM C754 to frame all gypsum board partitions, walls and enclosures. Extend framing from top of slab to underside of construction above, except where indicated or specified otherwise. Where framing does not extend to construction above, terminate framing as indicated.
   1. Terminate framing at underside of ceilings and secure to ceiling framing at 4'-0" o.c. maximum, or as noted.
   2. Terminate framing 4 inches above finish ceiling plane where noted, and provide extension of framing to slab above, at not over 48 inches on center to effect a rigid installation.

B. Use single length, unspliced studs, mounted vertically, spaced at not over 16 inches on center, and set into continuous channel tracks at bottom and top. Secure channel tracks to slabs with either approved screw type fastener or 1/4 inch diameter galvanized bolts, spaced 24 inches on center maximum and at each end of each piece of track. Where top track terminates at ceiling, secure track to metal ceiling suspension system at 48 inches on center maximum. Secure studs to tracks with sheet metal screws at jambs of openings, at corners, intersections, and ends of runs. Secure all other studs into tracks by friction, twisting studs into tracks.

C. Frame intersections and corners with multiple studs per ASTM C754, arranged to support all vertical edges of wallboard. Where metal stud framing abuts concrete or masonry surface, secure abutting stud to surface at 24 inches on center. At expansion joints, provide stud at each side of joint to allow gypsum board to stop at each side of such joints. Reinforce partition framing scheduled or indicated to be surfaced one side only, with a continuous horizontal, 1-1/2 inch channel, in the stud space and located six feet above the floor, secured to each stud; do not extend horizontal reinforcement through the expansion joints.

D. Frame each opening per ASTM C754 with studs at each side of opening; floor track at head, and at sill in opening terminating above the finished floor; jack studs above and below the

opening to complete and extend the stud spacing pattern. Frame for metal access doors in all locations shown, and in addition, for metal access doors in this work where required for access by other Trades.

1. Use 20 gage studs adjacent to door frame jambs.
2. Use 20 gage studs for cementitious backer board.

E. Erect the metal stud framing in true straight lines, with corners and intersections at right angles and with each surface forming true, plumb planes, unless shown otherwise. Frame openings in true rectangles, of sizes required or shown. Secure all parts together and to adjacent construction in a rigid manner.

F. Receive, set and secure in place, all hollow steel frames occurring in metal stud framing. Secure each frame anchor plate to adjacent stud vertical by bolting or screwing. Expansion bolt the bottom of each frame jamb to the floor with 1/4 inch diameter galvanized bolts.

G. Install all frames as defined with the Door and Hardware Institute Manual "Installation Guide for Doors and Hardware", Latest Edition, with the ± 1/16" tolerances for frames squareness, plumbness, alignment and twist.

1. Frames that do not meet the above stated tolerances shall be reinstalled, at no extra cost, to the satisfaction of the Owner's Representative.

H. For items to be set into or on front of metal stud framing that requires reinforcing inside of the metal stud framing, provide minimum 25 gage steel insert (or other approved anchorage plate insert) minimum 10 inches high and spanning at least 2 studs, in locations where handrails, grab bars, toilet partitions, cabinets and other items are attached to gypsum board partitions. Secure insert to adjacent studs. Review location of insert with installers of items to be attached, to obtain correct insert location.

I. Provide all cutting out, subframing with studs or furring channels or backer plates and finishing with metal accessory trim and joint treatment all openings required for recessed wall equipment.

3.2 CEILING FRAMING INSTALLATION

A. General

1. Install ceiling construction to provide true, flat planes as shown, either vertical and plumb, horizontal and level, or sloping, ready for application of metal furring. The reference to ceiling construction applies as well to the construction of drops and soffits, as applicable.

B. Suspended Ceiling Framing

1. Provide suspension systems for all gypsum board finished, and adhesive-applied acoustic tile on finished gypsum board, ceilings that are indicated as suspended, consisting of cold rolled steel carrying channels hung from concrete slab or steel structural framing above the ceiling plane per ASTM C754.
   a. Use 1-1/2 inch carrying channels for hanger spacing up to 4 feet-1 inch.
   b. Use 2 inch carrying channels for hanger spacing from 4 feet-2 inches up to 5 feet-1 inch.
   c. Use doubled 2 inch carrying channels for hanger spacing over 5 feet-1 inch.

2. Erect carrying channels parallel to walls and to each other, spaced uniformly at not over 4 feet on center. Provide a carrying channel parallel to and within 6 inches of walls and stop channel ends 1/2 inch from walls. Provide carrying channel framing of all openings having dimension of 2 feet-0 inches and over. Furnish channels in as long lengths as practical to minimize joints. Splice the channels by lapping a minimum of 12 inches and double-tying together. Locate splices only at hangers.
    a. At expansion joints parallel to carrying channels, provide separately hung channel at each side of expansion joint.
    b. Where run of carrying channels is perpendicular to expansion joint, stop the channels at each side of expansion joint.
3. Support carrying channels with hangers along each run, spaced not to exceed the spacing specified above for the size of channel used. If ductwork or equipment located in the ceiling plenum area interferes with hanger spacing, provide a trapeze arrangement to support the channels at the proper spacing. Provide a hanger at each corner of each ceiling opening which is to receive a recessed light troffer, diffuser, or grille, and at other points of extra loading.
    a. Do not secure hangers to metal roof deck, metal floor deck not concrete filled, ductwork, conduit, piping, equipment, or support system for any of these.
4. Secure hangers to construction above, in accordance with ASTM C 754 and the following requirements, as applicable, to develop the full strength of the hangers.
    a. Exposed Concrete Slab or Concrete-Filled Metal Floor Deck: Use hanger anchors specifically designed for hanger use.
    b. Steel Beams: Use beam clips.
    c. Steel Trusses and Joists: Wrap around the lower chord member.
5. Secure hangers to carrying channels by wrapping hangers around the channels to develop the full strength of the hangers.
    a. Wire Hangers: Wrap the wire around the steel joists, carrying channels and other fastening points twice and around itself three times.
    b. Steel Band Hangers: Secure the band to the steel joists, carrying channels and other fastening points; wrap the band tightly around the fastening point and bolt to itself.
6. Frame vertical plane of ceiling drops with carrying channels spaced not over 4 feet on center, erected plumb and parallel. Secure channels to horizontal runs at top and bottom; shim as required to produce a true plumb plane.

C. Direct-Secured Ceiling Framing
1. Provide steel carrying channel framing for all gypsum board finished ceilings and adhesive-applied acoustic tile on finished gypsum board ceilings that are indicated as direct secured, consisting of cold rolled steel carrying channels uniformly spaced at not over 4 feet on center and secured directly to underside of structural framing at not over 4 feet on center. Install channels parallel to walls, and to each other. Provide a channel parallel to and within 6 inches of walls and stop channel ends 1/2 inch from walls. Secure channels to construction above by tying with two strands of tie wire around the channel and framing member above. Provide steel shims as required to erect carrying channels in a level, true plane.

3.3 METAL FURRING INSTALLATION

A. Provide appropriate type metal furring per ASTM C754, on the following surfaces:
   1. Underside of suspended and direct-secured ceiling and soffit framing.
   2. On the underside of metal stair construction.
   3. On the room side of framed ceiling drops.
   4. To enclose steel framing of pipe, conduits, ductwork and similar items.
   5. On concrete, masonry and rigid insulation substrates where shown.
   6. For gypsum board finished and adhesive-applied acoustic tile finished gypsum board surfaces where other provisions are not made.
   7. Elsewhere as required to support gypsum board at the required lines; and for all surfaces so indicated.

B. Erect metal furring to true lines and levels. Provide all additional metal framing, bracing and supports necessary to install the metal furring rigidly and securely in place.

C. Erect furring in parallel lines, perpendicular to framing and uniformly spaced at not over 24 inches on center for vertical work and not over 16 inches on center for horizontal work. Secure furring to each support by saddle-tying with three strands of tie wire twisted tight, or with screws or clips, or by welding to structural framing. Secure furring to concrete or masonry substrates with fasteners at each end of furring and at 24 inches on center, maximum, between. Secure furring at stair soffits by welding, screwing, or bolting to stair framing. Furnish furring channels in as long lengths as practical to minimize the number of joints. Splice the channels by lapping and double-tying together. Use proper lengths so as to stagger splices in adjacent furring runs. Stop ends of ceiling furring 1/2 inch short of walls. Do not build any furring into masonry walls.
   1. At expansion joints parallel to furring run, provide furring channel at each side of expansion joint.
   2. Where run of furring is perpendicular to expansion joints, stop the furring channels at each side of expansion joint.
   3. Space furring at not over 12 inches on center for cementitious backer boards.

3.4 GYPSUM BOARD INSTALLATION

A. General
   1. Install gypsum board in accordance with ASTM C840, unless specified otherwise.
   2. Provide gypsum board on both sides of stud framed partitions and on one side of all furred areas and over interior concrete and masonry walls, where so indicated. Provide one layer of gypsum board in all locations, except where multiple layers are noted or are required for fire resistance ratings. Cover full height of stud framed partitions with gypsum board, including the portion above ceilings. In all wall and partition work, except where partitions terminate at underside of ceilings, extend wall and partition linings up past edge of ceiling linings, and cope edge of ceiling linings to such vertical surfaces.
   3. In wall and partition work, if gypsum board is not obtainable in length to span full height in a single piece, use longest length possible with butted end joints occurring above ceiling line and install gypsum board with long dimension vertical; otherwise install gypsum board

with long dimension horizontal; with vertical joints aligned over studs or furring in both cases. At fire-rated walls and partitions, install gypsum board with long dimension vertical and parallel to studs. At metal framed and furred areas, secure gypsum board to each stud, stud track and furring member with screws spaced not over 12 inches on center.

a. In ceiling and soffit work, install gypsum board with long dimension at right angles to furring, with end joints aligned over furring.
b. In partition work, offset horizontal and vertical joints on opposite sides of partition. In all work, offset joints in adjacent rows of gypsum board.

4. Drive all screws so that the screw is driven in until the screw head provides a slight depression below the surface of the gypsum board, but no further; do not break the paper coverings on the board during installation of fasteners. Do not place fasteners closer than 3/8 inch from edges of boards. Pair, not stagger, fasteners at edge joints between adjacent sheets.
5. Grout steel frames at jamb anchor points with setting-type joint compound.

B. Single-Layer Installation

1. Install single layer gypsum board in proper sequence so as not to delay this work. At corners and intersections, install gypsum board to abutted wall studs in time to allow securement of stud of abutting walls through gypsum board to studs of abutted walls.
2. At metal framed and furred areas, secure wallboard to each member with screws spaced at not over 12 inches on center.
3. At rigid insulation, install gypsum board in strict accordance with the directions of the rigid insulation manufacturer and the gypsum board manufacturer.

a. At unfurred insulated walls, secure gypsum board to insulation with adhesive.
b. At Z-furred insulated walls, secure gypsum board to each furring member with screws spaced at not over 12 inches on center.

3.5 CEMENT BACKER BOARD INSTALLATION

A. Install as specified for gypsum board except:

1. Use cement board manufacturer’s recommended Type S-12 corrosion-resistant treated screws.
2. Space screws not over 8 inches on center for walls and partitions, and not over 6 inches on center for ceilings.
3. Joint taping and filling will be performed by the ceramic tile trade of Section 09300.

3.6 METAL JOINT AND EDGE TRIM

A. Exterior Corner Reinforcement: Provide corner beads and joint compound for the full length of all external gypsum board corners, both vertically and horizontally, and elsewhere as required for the protection of gypsum board. Furnish single length members, without splicing, for each run up to change in direction. Miter or cope beads to fine-line joints at change in direction. Set beads plumb, level and true throughout. Secure beads through gypsum board to framing or furring with screws at maximum 12 inches on center.

B. Casing Beads: Furnish single length members, without splicing, for each run where exposed to view in the finished work. Miter beads at corners and trim to fine line at all joints. Set beads plumb, level and true throughout. Install beads, prior to gypsum board installation, and secure to framing or furring. After gypsum board edge is inserted in bead, finish gypsum board at bead with joint compound to produce smooth, finish surface. Provide casing beads and joint compound at the junction of gypsum board surfaces with:
   1. Finish masonry.
   2. Door frames and glazing frames not overlapping the gypsum board edges.
   3. Window openings.
   4. At perimeter of all gypsum board ceilings.
   5. At exposed edges of gypsum board.
   6. At perimeter of openings for light fixtures, diffusers, grilles, etc.
   7. At similar locations to provide a finished edge for the gypsum board.
   8. Also provide casing bead at intersection of gypsum board ceilings and walls, placed in the wall plane if walls terminate at ceiling and in the ceiling plane if ceiling terminates at the walls. Where walls and ceiling terminate together, provide casing bead at tops of walls.

C. Internal Corners: Provide tape and joint compound reinforcement at all internal vertical corners and elsewhere as noted or detailed on the Drawings. Do not provide tape and joint compound reinforcement of corners formed by wall and ceiling intersections.

D. Control Joints: Isolate gypsum board from all structural elements, except floors, by metal control joint members or metal trim. Locate control joints where indicated and as follows:
   1. At all changes in type of substrate.
   2. At control or expansion joints occurring in building construction.
   3. In large ceiling areas, not over 50 feet in either direction and to divide ceiling into rectangular areas of not over 2500 square feet.
   4. In long walls at maximum spacing of 30 feet:
      a. Locate vertical joints at center of door frame heads; extend vertically from head to top of wall.
      b. Locate vertical joints at door frame jambs; extend joints from top of frame to top of wall at both jambs of door frames on both sides of partition to form a gypsum board transom panel above door.
   5. Where gypsum board abuts a wall or ceiling of dissimilar construction.

E. Finish all other exposed joints between gypsum board sheets with tape and joint compound. Fill all screw holes and dimples and other depressions in gypsum board surfaces with joint compound.

F. Apply joint compound in not less than three applications, the first two with joint compound and the last with finishing or topping compound. Apply compounds with trowel or wide knife using sufficient pressure to insure adhesion and to prevent any voids from forming. At joints, embed tape during first application of joint compound. Extend joint compound out a sufficient distance to allow feathering of compound to gypsum board surface. Allow each application to dry prior to applying succeeding layers. Joint compound finished areas shall be smooth and flat, flush

with gypsum board on both sides. Sand, with sandpaper, the finished areas as necessary to remove rough spots, bulges, high areas and other imperfections.

3.7 METAL ACCESS PANELS

A. Receive and install metal access panels in gypsum board and ceramic and adhesive-applied acoustic tile finished gypsum board surfaces, in locations shown, as specified in Division 8.

B. In addition, receive and install other metal access panels furnished by Mechanical and Electrical Trades as required for access to their installed items.

3.8 FIRE-RATED WORK

A. Provide fire-rated gypsum board construction where indicated, including proper construction of framing and furring and proper type, thickness, layers and application of gypsum board, to produce the hourly fire-resistance ratings called for ceilings, walls and structural framing protection and to conform to the UL Design Numbers for each system. The requirements for materials, methods of erection and application specified under the appropriate headings of this Section shall apply, except where more stringent requirements are defined for the particular fire-resistance rating for the UL Design Number in the UL “Fire Resistance Directory”.
   1. Provide a one-hour fire-rated gypsum shaftwall system as an alternate system where indicated, complete with Type X gypsum board or proprietary core type fire-resistant gypsum board as required for the UL Design number, 1 inch thick gypsum coreboard shaft liner, and steel C-H studs, constructed in conformance with the manufacturer’s directions and UL fire tests to accomplish the fire rating required.

3.9 GYPSUM BOARD FINISH LEVELS

A. Gypsum Board Finish Levels: Finish panels to levels indicated below according to ASTM C 840, for locations indicated.
   1. Level 1: Embed tape at joints in ceiling plenum areas, concealed areas, and where indicated, unless a higher level of finish is required for fire-resistance-rated assemblies and sound-rated assemblies.
   2. Level 2: Embed tape and apply separate first coat of joint compound to tape, fasteners, and trim flanges where panels are substrate for tile, acoustical tile or where indicated.
   3. Level 3: Embed tape and apply separate first and fill coats of joint compound to tape, fasteners, and trim flanges where indicated.
   4. Level 4: Embed tape and apply separate first, fill, and finish coats of joint compound to tape, fasteners, and trim flanges at panel surfaces that will be exposed to view.

3.10 ADJUSTING AND PATCHING

A. When other adjacent work is done, or when directed by the Owner's Representative, and in sufficient time to allow field painting to be done on schedule, point up around all trim and other set work, repair or replace damaged gypsum board as approved by the Owner's Representative and leave all of this work in condition to comply with the Contract requirements as approved by Owner's Representative, all at no extra cost to the Owner.

END OF SECTION

Revision History	
Date	**Rev. No.**
A	0
B	0
C	0
D	0
E	0
F	0
02-19-09	0

DS/djo
C:\d\timsdatasf\brookhaven_national_laboratory\sf070003\200-projexec\280-spec\09250.doc

THIS PAGE INTENTIONALLY LEFT BLANK

SECTION 09300

TILE

PART 1 GENERAL

1.1 SUMMARY

A. Scope
   1. Provide all material and installation for shown, scheduled or specified, complete with all accessories and trim for a finished installation for the following:
      a. Glazed wall tile.
      b. Porcelain Mosaic tile.
      c. Thresholds installed as part of tile installations.
      d. Waterproof membrane for thin-set tile installations.
      e. Crack-suppression membrane for thin-set tile installations.
      f. Metal edge strips installed as part of tile installations.

B. Related Work Specified In Other Sections:
   1. Membrane waterproofing - Division 7.
   2. Gypsum board assemblies for cementitious backer units installed in gypsum wallboard assemblies - Division 9
   3. Dimension stone tile - Division 9.

1.2 QUALITY ASSURANCE

A. Installer Qualifications: Installer shall have completed a minimum of five projects of similar size, scope, and material specified. Provide evidence of successful project performance upon request of the Owner.

B. Source Limitations for Tile: Obtain all tile of same type and color and finish from one source with resources to provide products from the same production run for each contiguous area of consistent quality in appearance and physical properties without delaying the Work.

C. Source Limitations for Setting and Grouting Materials: Obtain ingredients of a uniform quality for each mortar, adhesive, and grout component from a single manufacturer and each aggregate from one source or producer.

D. Source Limitations for Other Products: Obtain each of the following products specified in this Section through one source from a single manufacturer for each product:
   1. Stone thresholds.
   2. Waterproofing.
   3. Joint sealants.
   4. Cementitious backer units.
   5. Metal edge strips.

E. Mockups: Construct mockups for each finish and construction specified prior to installation of the Work. Mockup shall demonstrate the installed conditions of material quality and workmanship. Mockups shall comply with the following requirements:
   1. Locate mockups on-site in the location and of the size directed by Owner.
   2. Notify Owner within seven days of the dates that the mockups will be constructed.
   3. Obtain Owner's approval of mockups before start of the Work.
   4. Retain and maintain mockups during construction in an undisturbed condition as a standard for judging the completed Work.
   5. Remove mockups from Project site when directed by the Owner.
   6. Approved mockups installed as part of the Work area left in an undisturbed condition may become part of the completed Work as inspected and approved by the Owner.
   7. Conduct pre-installation conference at Project site to comply with requirements in Division 1.

F. Requirements of Regulatory Agencies:
   1. Static Coefficient of Friction: For tile installed on walkway surfaces, provide products with the following values as determined by testing identical products per ASTM C 1028:
      a. Level Surfaces: Minimum 0.6.
      b. Step Treads: Minimum 0.6.
      c. Ramp Surfaces: Minimum 0.8.

G. Provide tile of Standard Grade, in grade sealed cartons, per ANSI 137.1. Provide tile as manufactured by a member of the Tile Council of America or by specified manufacturers.

H. Provide manufactured mortars and grouts with hallmarks indicating compliance with referenced standards.

I. Conductive performance characteristics of static-conductive tile: Comply with NFPA Bulletin 56A.

1.3 TESTING AGENCY

A. Retain the services of an Owner approved testing agency to perform required electrical resistance tests on the installed static-conductive tile flooring.

1.4 SUBMITTALS

A. Furnish submittals for items that are identified in this Section. Refer to Division 1 for definition of codes for types of submittals and the administrative requirements governing submittal procedure. Additional submittal requirements pertaining to this Section are specified herein under this Article.

B. Samples for Verification:
   1. Full-size units of each type and composition of tile and for each color and finish required.
   2. Full-size units of each type of trim and accessory for each color and finish required.
   3. Stone thresholds in 6-inch (150-mm) lengths.
   4. Metal edge strips in 6-inch (150-mm) lengths.

C. Submit shop drawings of all special work that is not readily shown on the Drawings or in manufacturer's product data. Include locations of expansion, contraction, control and isolation joints in the tile substrates, and finished tile surfaces.

D. Submit samples of tile units, materials, and colors not specified. Include manufacturers color charts and full range of colors available for each type of grout indicated.

E. Submit manufacturer's product data describing the materials proposed; encircle specific items proposed if product data submitted is a general catalog.

F. Test Report: Submit to show that flooring installation complies with requirements of REGULATORY AGENCY under QUALITY CONTROL.

G. Waterproofing Guarantee: Guarantee the elastomeric waterproof tile setting adhesive system for 2 years against defective materials, workmanship and leaks, except leaks or other failure caused by abuse or failure of related work. During the guarantee period, the Contractor agrees to restore defective Work to the standard of the Contract Documents without cost to the Owner, including all materials, labor, refinishing and other costs incidental to the Work. The Contractor also agrees to perform the Work of restoration within 10 days after receipt of notice from the Owner; and, within 24 hours after receipt of notice from the Owner, to inspect the Work and immediately repair leaks in the Work.

1.5 PRODUCT DELIVERY

A. Deliver all tile to the Work in the original, unopened containers, branded or labeled with the proper grade seal per TCA 137.1. Mark all containers with designations corresponding with the information given on the grade certificates. Containers will be subject to inspection by Owner's Representative before being opened, as well as during the progress of the Work.

B. Deliver manufactured mortars and grouts in sealed moisture-proof containers bearing hallmarks indicating compliance with the Specifications.

C. Deliver mortar and grout additives in sealed containers.

1.6 ENVIRONMENTAL REQUIREMENTS

A. Do not start tile installation over concrete slabs until concrete has cured for at least five days and then aged for 14 additional days, or for such additional time as required for the concrete to have shrunk and attained equilibrium.

B. Install tile when ambient air temperature, and temperatures of all materials, is 50 degF or higher. Provide room temperatures of 50 degF or higher from 24 hours prior to installation to at least five days after completion of installation in areas to receive tile. In addition, comply with minimum temperature recommendations of manufacturers for bonding and grouting materials to be used, and for curing of the same.

1.7 PROTECTION

A. Protect adjoining finished surfaces before beginning tile installation. Protect tile and adjacent construction against damage during progress of the work until completion.

B. Close spaces to traffic and other work where tile is being installed until tile has firmly set. Post appropriate notices and allow no work around freshly tiled walls and no walking on freshly tiled floors for at least 7 days after tile has been set.

C. Cover surfaces such as tiled floors, stools and thresholds with heavy non-staining paper held in place with masking tape as soon as completed.

1.8 EXTRA MATERIALS

A. Provide extra materials of each material and color specified matching the manufacturer's pattern and color run. Material shall be packaged with a protective cover for long term storage with labels identifying the contents by manufacturer, pattern, color, run, and color code established in the finish schedules.
   1. Tile and Trim Units: Provide three-percent of the amount installed of each type, pattern, composition, size, and color in full-size units.

PART 2 PRODUCTS

2.1 GLAZED WALL TILE

A. Glazed Wall Tile: Glazed interior ceramic tile, Standard Grade per Section 6 of TCA 137.1, 4-1/4 inch x 4-1/4 inch face size, 5/16 inch thick, cushion edge with spacer lugs, in single units or face-mounted sheets, with bright or matte glazed finish as scheduled, to match colors specified in the Finish Schedule.
   1. American Olean Tile.
   2. Dal-Tile.
   3. Florida Tile.
   4. United States Ceramic Tile Co.

B. Glazed Wall Tile Trim: Coved internal and bull nose external corners, cap units at top of wainscots, and other shapes required to complete the installation, all of kind, size and glaze to match tile and the conditions, to match colors specified in the Finish Schedule.

C. Glazed Wall Tile Coved Bases: Of same material and finish as wall tile, flush-type coved units, 4-1/4 inch x 4-1/4 inch size, with bull nose top to match colors specified in the Finish Schedule.

2.2 PORCELAIN MOSAIC TILE

A. Porcelain Mosaic Tile: Unglazed (except use satin glazed for walls), impervious body, porcelain mosaic tile, standard Grade Per Section 5 of TCA 137.1, 1/4 inch thick, cushion edges, 2 inch x

2 inch face size, face-mounted in sheets, to match patterns and colors specified in Finish Schedule.

1. American Olean Tile.
2. Dal-Tile.
3. United States Ceramic Tile Co.
4. Winburn Tile Mfg. Co.

B. Non-Slip Porcelain Mosaic Tile: Porcelain mosaic tile, unglazed 2 inch x 2 inch face size, cushion edges, face-mounted in sheets, incorporating minimum 7-1/2% abrasive grains by weight in the tile body, to match patterns and colors specified in Finish Schedule.

C. Porcelain Mosaic Tile Trim: Coved internal and bull nose external corners, cap units at top of wainscots, coves and bull noses at curbs, and other shapes required to complete the installation, all of kind, color, size and glaze to match tile and fit conditions specified in Finish Schedule.

D. Coved Bases: At porcelain mosaic tile floors where there is no wall tile base, use 5 inch high coved tile base consisting of unglazed trim shapes composed of coved unit 1 inch high x width of floor tile. Use proper number of tile courses and a bull nose top unit to achieve the 5-inch height, to match colors specified in Finish Schedule.

E. Ceramic Mosaic Tile Coved Bases: Where ceramic mosaic floor tile joins ceramic mosaic wall tile, use unglazed coved trim units of size 1-inch high x width of tile used, to match colors specified in Finish Schedule.

2.3 THRESHOLDS

A. Marble: ASTM C 503 with minimum abrasion resistance of 10 per ASTM C 1353 or ASTM C 241 with matte finish. Domestic per Marble Institute of America, Inc. “Group A” for soundness, selected by the Owner’s Representative. Furnish in proper one-piece length for full width of single openings, jointed at center of jambs for multiple openings.

B. Solid Polymer: Made from homogeneous solid sheets of filled plastic resin complying with material and performance requirements in ANSI Z124.3, for Type 5 or Type 6, without pre-coated finish.

1. Avonite, Inc.
2. DuPont Corian.
3. Formica Surell.
4. Nevamar Fountainhead.
5. Wilsonart Gibraltar.

C. For thresholds, use 1/2 inch thick with exposed edges beveled down to 1/4-inch thickness, and with honed finish on all exposed surfaces, sawn finish on concealed surfaces.

D. For stools, use 7/8 inch thick with exposed edges rounded, and with polished finish on all exposed surfaces, sawn finish on concealed surfaces.

2.4 SETTING AND GROUTING MATERIALS

A. Dry-Set Portland Cement Mortar (Thin Set): For wall applications, provide non-sagging mortar that complies with Per ASTM C 150, Type 1 and ANSI A118.1.
   1. Use white cement for wall grout.

B. Sand: For floor applications, natural sand per ASTM C 144, washed clean and graded.
   1. Use fine sand passing 1/16-inch mesh screen for grout.
   2. Use white sand.

C. Hydrated Lime: Per ASTM C 206 or C 207, Type S.

D. Water: Clean and potable, handled in clean containers not used for any other purpose.

E. Grout Coloring Additive: Lime proof, lightproof, non-fading mineral pigments of approved manufacturer and brand, of color required to produce approved mortar color.

F. Premixed Colored Grout: Non-expanding, non-shrinking, dense premixed colored grout in custom colors as selected.
   1. For Floor Tile: Use sanded type grout.
      a. Bostik Construction Products “Hydroment Ceramic Tile Grout”.
      b. Syracuse Adhesives Co. “SAC 80 Joint Filler and Tile Grout”.
      c. H. B. Fuller Co. “TA-660 Joint Filler Floor Grout”.
      d. Summitville “S-700”.
   2. For Wall Tile: Use unsanded type grout.
      a. Bostik Construction Products “Hydroment Dry Tile Grout (Unsanded)”.
      b. Syracuse Adhesives Co. “SAC 20 Dry Grout”.
      c. H. B. Fuller Co. “TA-610 Colored Wall Grout”.
      d. Summitville “S-667”.

G. Dry-Set Mortar: Per ANSI A118.1, of proper formulation recommended by the manufacturer for the type of tile and substrate (wall or floor, and substrate material) on which the dry-set mortar is to be used. Use factory-sanded dry-set mortar.

H. Epoxy Mortar and Grout: Per ANSI A118.3, non-staining type, formulated in compliance with TCA Formula AAR-II, in colors to match those specified in Finish Schedule.
   1. Laticrete International Inc. “Latapoxy SP-100 Stainless Epoxy Grout”.
   2. Hydroment Incorporated.
   3. TEC Specialty Products.
   4. Mapei Corporation.

I. Water-Resistant Organic Adhesive: Per ANSI A 136.1, Type I.

J. Conductive Dry-Set Portland Cement Mortar and Grout: Per ANSI A 118.2.

K. Latex-Portland Cement Mortar and Grout: Per ANSI A118.4, consisting of a liquid latex additive mixed with a prepackaged dry-set mortar recommended by or manufactured by the

latex additive manufacturer and formulated in strict accordance with the additive manufacturer's instructions.

L. Elastomeric Waterproof Tile-Setting Adhesive
   1. Bostik Construction Products "Hydroment Ultra-Set Membrane" and "Hydroment 1900 Mortar".
   2. Laticrete International, Inc. "Laticrete 9235 Waterproofing Membrane" and "Laticrete Tile Setting Mortar 4237".

2.5 MISCELLANEOUS MATERIALS

A. Reinforcement: 2 inch x 2 inch 16/16 galvanized welded wire fabric per ASTM A 185, in flat sheets.

B. Control Joint Materials:
   1. Sealant: Single-component polyurethane base sealant, non-sag type, meeting Fed. Spec. TT-S230, or two-component polyurethane base sealant meeting Fed. Spec. TT-S-227, Type II non-sag for vertical surfaces and Type I self-leveling for horizontal surfaces. Furnish in approved standard color to match grout color as closely as possible.
   2. Back-Up Material: Polyethylene foam gasket stock:
      a. Dow "Ethafoam SB Brand Sealant Backer Rod".
      b. Sonneborn "Sonofoam Backer Rod".
      c. Williams Products "Expand-O-Foam Cord".
   3. Joint Filler: Cork per ASTM D 1752, Type 2, or 70-durometer neoprene or butyl rubber.

PART 3 EXECUTION

3.1 PREPARATION

A. Inspect all surfaces upon which materials will be applied, and determine if there are any conditions detrimental to a successful tile installation, prior to proceeding with the work. The installation of tile work will be considered an acceptance of the surfaces to be covered, and claims for failure of tile work because of unsatisfactory sub-surfaces will not be allowed.

B. Prepare all surfaces upon which these materials will be applied as required to properly receive them. Remove from the substrate surfaces all dirt, grease, oil, paint, and other surface contaminations that will prevent proper bonding. Remove all ridges, fins, projections, high spots and other irregularities that would interfere with proper installation work. Wet concrete and masonry substrate surfaces with water, and allow to surface dry, just prior to installing setting beds.
   1. Do not wet surfaces to receive epoxy mortar.
   2. Do not wet surfaces to receive organic adhesive.

3.2 GENERAL

A. Install mortar beds of thicknesses required to provide the finish lines, planes, slopes and elevations required. Where floors have drains, slope mortar beds to drains; otherwise floors shall be level and flat. Walls shall be plumb and flat. Bond mortar beds to back-up construction and tile to mortar beds.

B. Form joints between tile units, or tile sheets, in straight continuous lines so that they intersect uniformly with the units and joints running in the opposite direction, plumb and level on walls, parallel to walls on floors. Align tile joints in walls with floor joints, where practical.
   1. Provide maximum 1/16-inch wide joints in mosaic tile work.
   2. Provide maximum 1/8-inch wide joints in glazed wall tile work.

C. Wash all finish surfaces clean, free from mortar, dirt and other defacements.

D. Neatly cut and accurately fit all tile work around piping and other installations, which pierce the tile work, at irregular shaped places, and at the junction with other materials. Do not chip or otherwise damage the surface of the tile during cutting. Grind cut edges smooth and even.

E. Lay out the work as follows:
   1. Walls: Where possible, lay out Work so that no tile less than half size occurs. Unless tile Work is required to fill vertical spaces exactly, heights indicated shall be maintained in full courses to produce nearest attainable heights without cutting.
   2. Floors: Before applying setting bed, establish borderlines. Center field work in both directions to permit laying pattern with minimum of cut tiles. Lay floor without borders from centerlines outwards. Make necessary adjustments at walls. Set tile base units so that finish surfaces are flush with floor tile and wall tile where the base meets it.

F. Mix and use proprietary or trade-marked materials in strict accordance with manufacturer's instructions, unless otherwise specified.

G. Provide this work and materials per the Tile Council of America Handbook for Ceramic Tile Installation, American National Standards Institute Standard Specifications; and, to the further requirements specified in this Section.

3.3 SETTING BEDS

A. Contractor may set interior ceramic tile with dry-set mortar or latex-portland cement mortar where thin-set mortar is used floors in areas not having a hold-down in the concrete base slab.

B. Dry-Set Mortar:
   1. Interior Walls Not Otherwise Specified: Install tile using dry-set mortar per ANSI A 108.5 and TCA Handbook Method W202 on masonry or concrete and W243 on gypsum board.
   2. Interior Floors Not Otherwise Specified: Install tile using dry-set mortar per ANSI A 108.5 and TCA Handbook Method F113.
   3. Exterior Walls Not Otherwise Specified: Install tile using dry-set mortar per ANSI A 108.5 and TCA Handbook Method W202 on masonry or concrete.

4. Exterior Floors Not Otherwise Specified: Install tile using dry-set mortar per ANSI A 108.5 and TCA Handbook Method F102.

C. Latex-Portland Cement Mortar:
   1. Interior Walls Not Otherwise Specified: Install tile using latex-Portland cement mortar per ANSI A 108.5 and TCA Handbook Method W202 on masonry or concrete and W243 on gypsum board.
   2. Interior Cementitious Backer Board Walls: Install tile on cementitious backer board surfaces using latex-portland cement mortar per ANSI A108.5 and TCA Handbook Method W244. Before installing wall tile, treat all joints and corners in cementitious backer board substrate with 2inch wide glass fiber mesh tape embedded in a skim coat of the latex-portland cement mortar.
   3. Interior Floors Not Otherwise Specified: Install tile using latex-portland cement mortar per ANSI A 108.5 and TCA Handbook Method F113.
   4. Exterior Walls Not Otherwise Specified: Install tile using latex-portland cement mortar per ANSI A 108.5 and TCA Handbook Method W202 on masonry or concrete.
   5. Exterior Floors Not Otherwise Specified: Install tile using latex-portland cement mortar per ANSI A 108.5 and TCA Handbook Method F102.

D. Portland Cement Mortar:
   1. Interior Walls: Install tile using portland cement mortar per ANSI A 108.1 and TCA Handbook Method W211.
   2. Interior Floors: Install tile in full portland cement mortar bed of thickness necessary to bring finished tile floor to elevations and slopes shown. Follow ANSI A 108.1 and TCA Handbook Method F112 for direct installation on slab or F121 (with reinforcing) for installation over membrane waterproofing.
   3. Exterior Walls: Install tile using portland cement mortar per ANSI A 108.1 and TCA Handbook Method W201.
   4. Exterior Floors: Install tile in full portland cement mortar bed of thickness necessary to bring finished tile floor to elevations and slopes shown, per ANSI A 108.1 and TCA Handbook Method F101.

E. Epoxy Mortar, Thin-Set Method for Floor Tile: Install tile in epoxy mortar bed per ANSI A 108.6 and TCA Handbook Method F131.

F. Water-Resistant Organic Adhesive:
   1. Interior Walls: Install tile in organic adhesive per ANSI A 108.4 and TCA Handbook Method W242.
   2. Interior Floors: Install tile in organic adhesive per ANSI A 108.4 and TCA Handbook Method F116. Prior to application of organic adhesive setting bed, apply organic adhesive mixture as a waterproof membrane on the substrate.

G. Elastomeric Waterproof Tile-Setting Adhesive for Floor Tile:
   1. Mix and apply system per manufacturer's instructions.
   2. All aspects of surface preparation, membrane installation and setting of tile shall be in accordance with the instructions of the manufacturer of the approved system.

3. Extend membrane up walls behind tile bases to height of top of tile bases.
4. Set tile on waterproof membrane only in thinset-mortar/adhesive specified as part of the system. Do not mix the products of different manufacturers.
5. Determine from the manufacturer of the accepted tile-setting system that the specific grout to be used for grouting the tile is compatible with the tile-setting mortar/adhesive to be provided. If the specified grout is not compatible, propose another grout product for the Owner's Representative's acceptance.

3.4 CONTROL JOINTS

A. Construct control joints in tile work per TCA Handbook Method EJ171, complete with filler, back-up and bond breaker as required, and calk with sealant. Match width of control joints with tile joints.

B. For Walls: Provide directly over masonry and gypsum board control joints, and 12 to 16 feet o.c. vertically and horizontally elsewhere.

C. For Floors: Provide directly over building expansion joints and other joints in concrete subslabs; and at 24 to 36 feet each way in large areas.
   1. Exterior Floors: Provide 3/8-inch wide control joints at 12 feet on center.

3.5 GROUTING

A. Tile Set with Dry-Set or Latex-Portland Cement Mortar:
   1. Walls Not Otherwise Specified: Grout with white latex-portland cement grout per ANSI A 108.5 and grout manufacturer's instructions.
   2. Walls: Grout ceramic mosaic tile with field-tinted colored latex-portland cement grout or premixed colored grout in custom colors as scheduled; mix, apply and cure per grout manufacturer's instructions.
   3. Walls: Grout glazed wall tile with field-tinted colored unsanded (neat) latex-portland cement grout or premixed unsanded colored grout in custom colors as scheduled; mix, apply and cure per grout manufacturer's instructions.
   4. Walls: Grout tile with stainless epoxy grout in standard colors scheduled, per ANSI A108.6, TCA Handbook Method F115, and grout manufacturer's instructions.
   5. Floors Not Otherwise Specified: Grout tile with gray latex-portland cement grout per ANSI A 108.5 and grout manufacturer's instructions.
   6. Floors: Grout tile with field-tinted colored latex-portland cement grout or premixed colored grout in custom colors as scheduled; mix, apply and cure per grout manufacturer's instructions.
   7. Floors: Grout tile with stainless epoxy grout in standard colors as scheduled, per ANSI A 108.6, TCA Handbook Method F115, and grout manufacturer's instructions.

B. Tile Set with Portland Cement Mortar:
   1. Walls Not Otherwise Specified: Grout tile with white latex-portland cement grout per ANSI A 108.5 and grout manufacturer's instructions.

2. Walls: Grout ceramic mosaic tile with field-tinted colored latex-portland cement grout or premixed colored grout in custom colors as scheduled; mix, apply and cure per grout manufacturer's instructions.
3. Walls: Grout glazed wall tile with field-tinted colored unsanded (neat) latex-portland cement grout or premixed unsanded colored grout in custom colors as scheduled; mix, apply and cure per grout manufacturer's instructions.
4. Walls: grout tile with stainless epoxy grout in standard colors scheduled, per ANSI A108.6, TCA Handbook Method W221 or W222, and grout manufacturer's instructions.
5. Floors Not Otherwise Specified: Grout tile with gray latex-portland cement grout per ANSI A 108.5 and per grout manufacturer's instructions.
6. Floors: Grout tile with field-tinted colored latex-portland cement grout or premixed colored grout in custom colors as scheduled; mix, apply and cure per grout manufacturer's instructions.
7. Floors: Grout tile with stainless epoxy grout in standard colors as scheduled, per ANSI A 108.6, TCA Handbook Method F115, and grout manufacturer's instructions.

C. Floor Tile Set with Epoxy Mortar: Grout with stainless epoxy grout in standard colors as scheduled, per ANSI A 108.6, TCA Handbook Method F131, and per grout manufacturer's instructions.

D. Tile Set with Water Resistant Organic Adhesive:
1. Walls Not Otherwise Specified: Grout with white latex-portland cement grout per ANSI A 108.5 and per grout manufacturer's instructions.
2. Walls: Grout tile with field-tinted colored latex-portland cement grout or premixed colored grout in custom colors as scheduled; mix, apply and cure per grout manufacturer's instructions.
3. Walls: Grout glazed wall tile with field-tinted colored unsanded (neat) latex-portland cement grout or premixed unsanded colored grout in custom colors as scheduled; mix, apply and cure per grout manufacturer's instructions.
4. Floors Not Otherwise Specified: Grout tile with gray latex-portland cement grout per ANSI A 108.5 and per grout manufacturer's instructions.
5. Floors: Grout tile with field-tinted colored latex-portland cement grout or premixed colored grout in custom colors as scheduled; mix, apply and cure per grout manufacturer's instructions.

E. Floor Tile Set with Elastomeric Waterproof Tile-Setting Adhesive:
1. Floors Not Otherwise Specified: Grout with gray latex-portland cement grout per ANSI A 108.5 and per grout manufacturer's instructions.
2. Floors: Grout with field-tinted colored latex-portland cement grout or premixed colored grout in custom colors as scheduled; mix, apply and cure per grout manufacturer's instructions.
3. Floors: Grout tile with stainless epoxy grout in standard colors scheduled, per ANSI A108.6, TCA Handbook Method F115, and grout manufacturer's directions.

3.6 THRESHOLDS

A. Cut and fit-to-fit the required spaces, with 1/16-inch wide joints between marble and adjacent constructions. Furnish single pieces for each location where possible. Notch threshold ends to fit around stops on door frames. Round all exposed corner edges. Set in same kind of beds as used for adjacent tile surfaces, adjust top surface to a flat level plane, and fill all joints with grouting mortar colored to match the threshold.

3.7 FIELD QUALITY CONTROL

A. Not less than one month after installation and final cleaning, test the conductive ceramic tile flooring to determine the electrical resistance requirements of NFPA 56A. Furnish testing equipment and perform the test in accordance with NFPA 56A.

B. Should conductive flooring fail to comply with requirements of NFPA 56A, remove such flooring and replace with flooring that does comply, all at no cost to the Owner.

3.8 ADJUSTING AND CLEANING

A. Remove all broken, chipped, loose, stained, or otherwise unsatisfactory work, and patch and restore imperfect materials and workmanship to condition compatible with Contract requirements.

B. When so directed by the Owner's Representative, after other adjacent work is substantially completed, remove and dispose of protective coverings and thoroughly clean all tile and marble work by approved manner, using a non-acidic type cleaner.

END OF SECTION

Revision History	
Date	**Rev. No.**
A	0
B	0
C	0
D	0
E	0
F	0
02-19-09	0

DS/djo
C:\d\timsdatasf\brookhaven_national_laboratory\sf070003\200-projexec\280-spec\09300.doc

SECTION 09651

RESILIENT TILE FLOORING

PART 1 GENERAL

1.1 SUMMARY

A. Scope
   1. Provide resilient flooring work as shown, scheduled, or specified, complete with accessories and trim for a finished installation.

B. Related Work Specified In Other Sections:
   1. Rough Carpentry - Division 6.

1.2 QUALITY ASSURANCE

A. Requirements Of Regulatory Agencies
   1. Fire Hazard Classification: Resilient flooring materials, where so specified hereinafter, shall have maximum rating of 75 for flame spread, and less than 450 for smoke development when tested per ASTM E 662 and shall have a Critical Radiant Flux (CRF) rating of 0.45 watts/sq. cm. or more when tested per ASTM E 648.

B. Testing Agency
   1. Retain the services of an Owner-approved testing agency to perform required electrical resistance tests on the installed static-conductive flooring.

1.3 SUBMITTALS

A. Furnish submittals for items that are identified in this Section by a different typeface and a bracketed code (e.g., *Item [L]*). Refer to Division 1 General Requirements for definition of codes for types of submittals and the administrative requirements governing submittal procedure. Additional submittal requirements pertaining to this Section are specified herein under this Article.

B. Submit product data for resilient flooring material where specified.

C. Submit samples of any substitute resilient flooring materials that are not specified.

D. Test Report: Submit to show that static-conductive flooring installation complies with requirements of REGULATORY AGENCY under QUALITY ASSURANCE.

1.4 OPERATION AND MAINTENANCE DATA

A. Submit maintenance data for care and cleaning of resilient flooring materials per Division 1 requirements.

1.5 MAINTENANCE MATERIALS (EXTRA STOCK)

A. Furnish to the Owner extra materials for maintenance purposes of each material provided, of same lot, run or batch used, including but not limited to the following:
   1. Floor Tile: Not less than 2% (to the nearest full carton) of the amount of each type and color installed.
   2. Resilient Base: One full carton (24 pieces) of each type and color.

1.6 PRODUCT STORAGE

A. Deliver products to the Project site in manufacturer's original, unopened cartons and containers, each bearing names of product and manufacturer, Project identification, and shipping and handling instructions.

B. Store products in dry spaces protected from the weather, with ambient temperatures maintained between 50 and 90 degF (10 an 32 degC).

C. Move products into spaces where they will be installed at least 48-hours before installation, unless longer conditioning periods are recommended in writing by the manufacturer.

1.7 PROJECT CONDITIONS

A. Environmental Requirements
   1. Rooms or areas scheduled to receive resilient flooring shall be continuously maintained at not less than 70 degF from at least 48 hours prior to installation to at least one week after installation.

B. Protection
   1. Protect completed work from traffic and damage with durable temporary coverings. Do not allow traffic during first 24 hours after installation of resilient flooring materials.

C. Sequencing, Scheduling
   1. Do not start installation of resilient flooring until other finish work, including painting, has been completed in each room or area.

PART 2 PRODUCTS

2.1 MATERIALS

A. Tile
   1. *Vinyl-Composition Tile [P]*: Face size 12 inch x 12 inch, 1/8 inch thick, per ASTM F1066, Composition 1, Class 2, of contract or architectural series of marbleized pattern extending through entire body of tile. Provide tile to match colors/patterns specified in Finish Schedule. Provide tile having fire hazard classifications specified in REQUIREMENTS OF REGULATORY AGENCIES.
      a. Armstrong "Standard and Premium Excelon.

b. Azrock “Custom Cortina”, “Futura”, and “Classics” series.
c. Mannington.
d. Tarkett “Expressions”.

B. Resilient Base
1. *Vinyl Resilient Base [P]*: 4 inch high by 0.080 inch or 1/8 inch thick, conforming to ASTM F1861, Group 2, Type TV, straight Style A non-cove type in carpeted areas and cove Style B in all other rooms and areas, with rough top, in colors to match those specified in Finish Schedule. Provide manufacturer’s standard preformed corner units to match base.
   a. Armstrong “Vinyl Base”.
   b. Flexco “Vinyl Base”.
   c. Johnsonite “Vinyl Wall Base”.
   d. Mercer Plastics Co., “Standard Vinyl Wall Base”.
   e. Roppe, “Vinyl Base”.

C. Miscellaneous
1. *Resilient Flooring Feature Strips [P]*: Solid standard color selected, face width 1 inch unless noted otherwise, 1/8 inch thick, of vinyl composition, homogenous vinyl or rubber.
   a. Armstrong “Excelon Feature Strips”
   b. Azrock “Vinyl Composition Feature Strip”
   c. Mannington “Vinyl Composition Feature Strip”
   d. Mercer “643 Vinyl Feature Strip”
2. *Resilient Flooring Reducer Strips [P]*: Solid standard color selected, face width 1 inch or 1-1/4 inch, 1/8 inch thick tapered to floor on opposite edge, of homogeneous vinyl or rubber.
   a. Azrock “Vinyl Composition Edging Strip”
   b. Flexco “92 Vinyl Reducer Strip”
   c. Johnsonite “CB-XX-C Reducer Strips”
   d. Mercer “633 Tile Reducer”
   e. Roppe “22”
3. *Resilient Flooring Thresholds [P]*: Solid standard color selected, 5-1/2 inch full width, 2-3/4 inch half width, 1/2 inch high tapered to 1/4 inch at edge, homogeneous vinyl or rubber.
   a. Johnsonite “VT1-XX” full width, “VT2-XX” half width
   b. Mercer “683”, full saddle, half saddle
   c. Roppe “33” full, “32” half
4. Adhesives: Approved waterproof adhesives and cements of brands and types recommended and guaranteed by the approved resilient materials manufacturers for application of resilient materials to the various types of surfaces to be covered.

5. Cleaning and Waxing Materials:

Hillyard Chemical Co.	“Super Shine-All” cleaner,
	“Hil-Tex II” sealer, and
	“Super Hil-Brite” wax
Huntington Laboratories,	In“Hawk” cleaner,
	“Umbrella” sealer, and
	“Umbrella Contrast” wax
Vestal Laboratories	“Briten All” cleaner,
	“Sealer 5” sealer, and
	“Style” wax

6. Underlayment Material: Latex type as recommended by the resilient flooring manufacturer, for patching defects in substrates to receive resilient flooring material.
   a. Armstrong “Latex Underlayment S-180”
   b. Azrock “Latex Underlayment”
   c. Mannington “Latex Underlayment”

PART 3 EXECUTION

3.1 PREPARATION

A. Clean and prepare surfaces as required to receive adhesives and resilient materials. Remove all surface contaminants that would prevent bonding of resilient materials. Remove all dirt, loose and scaly surfaces, mortar and plaster droppings, surface projections and unsound areas.

B. Fill all cracks, holes and low spots to produce a smooth, even surface; use specified manufacturer’s approved latex underlayment.

C. Provide Calcium Chloride test on scheduled concrete slab areas to receive resilient flooring according to ASTM F1869, “Standard Test Method for Measuring Moisture Vapor Emission Rate of Concrete Sub floor Using Anhydrous Calcium Chloride” to insure concrete slab acceptability. Remove curing agents in and around the test area prior to conducting test. Test results shall fall within flooring manufacturer’s acceptable levels prior to installation.

D. Provide a 72-hour Qualitative Bond Test in a 48-inch by 48-inch area using the specified adhesives. Remove of curing agents, old adhesives, inhibitors, oil and grease in the scheduled area prior to test to assure proper installation.

E. Provide Alkali test on scheduled concrete slab areas to insure concrete slab acceptability. Remove curing agents in and around the test area prior to conducting test. Test results shall fall within flooring manufacturer’s acceptable pH levels prior to installation.

F. Provide waterproof underlayment application where slab fails to meet the tests required prior to installation.

G. Do not proceed with installation until unsatisfactory conditions have been corrected.

3.2 INSTALLATION

A. General
   1. Install all materials as recommended by the manufacturer and per the additional requirements of this Section. Align all joints and lay all joints tight with each finished surface in flush, true plane. Roll or press all materials in place to insure contact with sub-surfaces.

B. Floor Tile
   1. Center each room or area with respect to the principal permanent walls and start laying tile from such centers. Apply adhesive to substrates. Lay tiles to show grain or pattern running in one direction only. Where field pattern does not work out to full units at perimeter, lay out the pattern to provide perimeter units of equal width, but not less than half tile wide. Where tile is same pattern and color for adjacent rooms or areas, continue tile through doorways. At depressed floor covers for embedded utility boxes, fill covers with accurately cut and fitted tile firmly cemented to cover.
   2. Where tiled floor terminates at an untiled floor, install continuous reducer strip.
   3. Install proper type of threshold as scheduled or indicated.
   4. Install static-conductive tile so that completed installation complies with the requirements of NFPA Bulletin No. 56A.

C. Resilient Base
   1. Install resilient base in adhesive on all vertical surfaces scheduled and indicated; continue into all recesses, closets, projections, and on toe spaces of equipment or cabinet items as required. Use longest lengths practicable.
   2. Install preformed corner units at all corners.
   3. Field-form all corners, heating and cooling base as necessary to permanently set the shape; notch and miter cove for inside corners; use long lengths to form corners so as to extend beyond corners as far as possible, but not less than 6 inch from corner.

3.3 FIELD QUALITY CONTROL

A. Not less than one month after installation and final cleaning of conductive resilient flooring, test the electrical resistance to determine if it conforms to the requirements of NFPA 56A. Furnish test equipment and perform the test in accordance with NFPA 56A.

B. Should conductive flooring fail to comply with the requirements of NFPA 56A, remove such flooring and replace with flooring that does comply, all at no cost to the Owner.

3.4 ADJUSTING AND CLEANING

A. Clean adhesives from adjacent finished surfaces as the work progresses; pay all costs incurred if adjacent finished surfaces cannot be cleaned to their original condition and need to be repaired or replaced.

B. Clean all resilient flooring materials upon completion of installation. Apply one coat of sealer and two separate machine-polished coats of wax on all resilient flooring materials, except

rubber products. Apply first coat of wax immediately after cleaning and sealing; apply final coat of wax just prior to occupancy by the Owner.

C. When so directed, or prior to final waxing, adjust and straighten misaligned materials, replace or re-cement loose materials and replace broken, cracked, chipped or scratched materials.

END OF SECTION

Revision History	
Date	**Rev. No.**
A	0
B	0
C	0
D	0
E	0
F	0
02-19-09	0

DS/djo
C:\d\timsdatasf\brookhaven_national_laboratory\sf070003\200-projexec\280-spec\09651.doc

SECTION 09900

PAINTING

PART 1 GENERAL

1.1 SUMMARY

A. Scope
1. Provide all material, labor and equipment to produce painted and finished surfaces as shown and scheduled on the DRAWINGS and as specified herein, to provide properly finished surfaces throughout. This SECTION, in conjunction with the color/finish schedules on the DRAWINGS or in the SPECIFICATIONS or issued separately, establishes the scope of the painting work, the surfaces to be painted, and the paint systems to be used.
   a. Exterior items and surfaces that are exposed.
   b. Interior items and surfaces that are exposed.
   c. Surface preparation, priming, and finishes in addition to shop primers and treatment of surfaces specified elsewhere.
   d. Also included herein is the painting of all exposed mechanical and electrical work such as metal piping (including color coding), conduit, ductwork, supports, equipment and fixtures, except items which are factory finished.
   e. Also paint existing surfaces where scheduled.
   f. Also paint all relocated existing painted items.
2. Do not paint exposed surface where the paint, color or room finish schedules indicate that a surface is not to be painted or remain natural. If the paint, color or room finish schedule does not identify a surface or item to be painted, paint the surface or item the color and finish of adjacent surfaces and materials, even if the schedules do not indicate finish or color. Verify color and finish with the Owner's Representative.
3. All interior painting and coatings to meet limits established by the Green Seal Standard GS-11 and as required to meet the minimum requirements of LEED NC 2.2.

B. Related Work Specified Under Other Sections
1. Shop prime painting of steel surfaces - DIVISION 5.
2. Shop priming of steel doors and frames – Division 8.
3. Surface preparation of gypsum board assemblies – Division 9.
4. Resinous and special coatings – Division 9.
5. Substrate sealers for wall coverings – Division 9.
6. Painting of mechanical and electrical work – Division 15 and 16.
7. Prime painting of mechanical and electrical work and touch-up of factory-applied finishes which have been damaged on mechanical and electrical equipment - DIVISIONS 15 and 16.
8. Identification of mechanical lines - DIVISION 15.
9. Back painting and protective treating of wood - DIVISION 6.

10. Providing of temporary protective covers on fire protection sprinkler heads - DIVISION 15.
11. Traffic striping for bituminous paving, including paint materials - DIVISION 2.
12. Traffic striping for concrete paving – Division 3.

C. Do not paint the following:
   1. Do not paint the following finished metal surfaces:
      a. Anodized aluminum.
      b. Stainless steel.
      c. Chromium plate.
      d. Copper.
      e. Bronze and brass.
   2. Do not paint the following concealed surfaces in inaccessible areas:
      a. Foundation spaces.
      b. Furred areas.
      c. Ceiling plenums.
      d. Utility tunnels.
      e. Pipe spaces.
      f. Duct shafts.
   3. Do not paint the follow pre-finished or factory finished items:
      a. Architectural casework.
      b. Acoustical wall panels.
      c. Metal toilet partitions.
      d. Metal lockers.
      e. Finished mechanical and electrical equipment.
      f. Light fixtures.
   4. Do not paint moving and operating parts of equipment.
      a. Valve handles, knobs and controls.
      b. Damper operators and controls.
      c. Linkages.
      d. Sensor components.
      e. Shafts for fans and motors.
   5. Do not paint code inspection labels such as (UL) Underwriters of (FM) Factory Mutual labels.
   6. Do not paint identification and utility information labels on mechanical and electrical equipment.

D. Repaint work is required as part of the work specified in this Section. Paint existing painted or finished surfaces that are altered, marred or damaged the same as specified for new surfaces. Match color and sheen of existing surfaces unless indicated otherwise. Extend all such painting to a suitable boundary to avoid a patched effect. Suitable boundaries are changes in planes of surfaces such as corners, frames, moldings and recesses.

1.2 DEFINITIONS

A. Paint
   1. Factory-formulated emulsions, enamels, paints, stains, sealers, varnishes, epoxies and other coatings, whether used as prime, intermediate, or finish coats.

B. Terminology: ASTM D16.

C. Exposed Surfaces
   1. "Exposed surfaces" means all surfaces or areas visible when the permanent construction is completed, and when all built-in cabinets, fixtures, convector covers, grilles and similar items are in place. "Exposed surfaces" shall include all surfaces or areas in back of cabinets, furniture, equipment and other items that are not built-in or fixed in place, and also shall include all surfaces visible thru grilles, louvers and registers, and all roof-mounted ferrous metal items.

D. Gloss: Range per National Paint and Coatings Association (NPCA).
   1. Eggshell: Low sheen finish with a gloss range between 5 and 20 when measured at a 60 degree meter.
   2. Satin: Low sheen finish with a gloss range between 15 and 35 when measured at a 60 degree meter.
   3. Semi-gloss: Medium sheen finish with a gloss range between 30 and 65 when measured at a 60 degree meter.
   4. Full gloss: High sheen finish with a gloss range greater than 65 when measured at a 60 degree meter.

1.3 QUALITY ASSURANCE

A. The Work of this Section shall be carried out by an approved applicator having specialized in this Work as its primary business for at least 5 years, and having performed satisfactorily Work of this type, size and scope.

B. Provide undercoating fillers, primers and finish coating materials from one manufacturer.

C. Regulatory Requirements
   1. Paint materials and application techniques shall comply with local air quality requirements.

D. Sample Areas
   1. Paint sample areas not less than 30 square feet, in locations as directed by the OWNER'S REPRESENTATIVE, to establish standards of quality and workmanship to be expected of painting Work on the PROJECT. Sample painted areas will be inspected by the OWNER'S REPRESENTATIVE, and, if approved, will be used as a basis by which the acceptability of the completed painting on the PROJECT will be judged.

E. Adhesion tests shall be required before proceeding with painting.

F. Testing: Testing Laboratory Shall Have The Following Responsibilities
   1. CONTRACTOR shall hire testing laboratory to do testing.
   2. Analyze the existing painted surface to determine the type of paint (including primer) and number of existing paint layers that exist.
   3. Determine if contaminants or ill bonding paint layers are present.
   4. What type of contaminants are present and what proposed surface preparation is required.
   5. Perform a minimum of one adherence test in each bay, minimum of one per 1000 s.f., or as required due to the existing conditions of the area to be painted.
   6. Testing Laboratory shall recommend proper cleaning methods, along with the scraping and sanding routine, to properly make the surfaces to be painted acceptable to the new paint material.
   7. After the cleaning process, recommend primer paint system to touch up the existing surfaces.
   8. After surfaces are properly prepared and primed, recommend the type of paint system and material best suited for the existing conditions.
   9. The testing laboratory may do other testing to properly define the existing conditions and to analyze what the proper paint system should be.
   10. Where any contaminants, such as asbestos, lead, or other carcinogens, are found to be present, the laboratory shall notify the OWNER'S REPRESENTATIVE for proper disposal of the contaminant without delaying the construction process.

1.4 SUBMITTALS

A. Furnish submittals for items that are identified in this SECTION by a different typeface and a bracketed code (e.g., *Item [L]*). Refer to SECTION 01340 for definition of codes for types of submittals and the administrative requirements governing submittal procedure. Additional submittal requirements pertaining to this SECTION are specified herein under this Article.

B. *Paint Color Samples [S]*: Submit color samples, showing paint system manufacturer's standard color range and sheens for each paint system specified. Sample shall be not less than 12 square inches in size.

C. After receipt of color samples and before commencement of the WORK, the ARCHITECT-ENGINEER will furnish a color schedule, showing the location of the various colors. Refer to the article "COLORS", herein.

D. Paint Fire Hazard Classification: Submit certificates stating that materials meet fire hazard classification as specified.

1.5 DELIVERY, STORAGE AND HANDLING

A. Delivery
   1. Deliver specified products to site in unopened, sealed containers bearing manufacturer's name, brand name, type and color of paint, and instructions for application.

B. Storage
   1. Store products in the space designated for the storage and mixing of paint. Whenever it may be necessary to change the location of storage space, promptly move products to the newly designated space, without additional cost to the OWNER.
   2. Refer to the article “PROTECTION” in Part 3.
   3. Store paint materials in ventilated areas at a minimum temperature of 45 degF (7 degC). Keep containers tightly covered. Maintain containers and storage area in clean condition.
   4. Protect pain materials storage space from damage. Remove contaminated rags and waste from premises every day. Take all precautions to prevent fire, including spontaneous combustion.
   5. Unless a room or area in the building is designated by the Owner’s Representative for storage of paint materials, provide a temporary outside storage shed for storage of paint materials.
   6. If the Owner’s Representative designates temporary storage space in the building, store materials so that they do not interfere with the Owner’s operation or the work of others. Move materials when directed to do so by the Owner’s Representative at no cost to the Owner. Protect existing surfaces from damage or defacement. On completion of painting operations, leave temporary storage spaces in building clean.

1.6 PROJECT CONDITIONS

A. Environmental Requirements
   1. Do not apply exterior paint in damp or rainy weather, nor until surface has dried from the effects of such weather.
   2. Do not apply exterior or interior paint when the ambient temperature is less than 50 degF.
   3. Do not apply paint when the relative humidity is greater than 85% or when temperatures are less than 5 degF (3 degC) above the dew point.
      a. Interior painting is allowed in damp and rainy weather when the interior areas are enclosed and heated and ventilated in accordance with the temperature and humidity requirements of the manufacturer.

B. Provide all scaffolds, drop cloths, ladders and other equipment required for the proper execution of the work.

PART 2 PRODUCTS

2.1 MANUFACTURERS

A. Products: Provide products listed in Part 2 articles.

B. Manufacturer’s Names: Shortened version(shown in parentheses) of the following manufacturer’s names are used in Part 2 articles:
   1. Benjamin Moore & Co., (Benjamin Moore).
   2. Coronado Paint Company (Coronado).
   3. ICI Paint Stores, Inc. (Dulux Paint).
   4. Kelly-Moore Paint Co., (Kelly-Moore).

5. M.A. Bruder & Sons, Inc. (M.A.B. Paint).
6. PPG Industries, Inc, (Pittsburgh Paint).
7. Sherwin-Williams Co. (Sherwin-Williams).

2.2 PAINT MATERIALS, GENERAL

A. Provide approved paint material for each paint type required for the Work.

B. Material Compatibility: Provide block fillers, primers, and finish-coat materials that are compatible with one another and with the substrates indicated under conditions of service and application, as demonstrated by manufacturer based on testing and field experience.

C. Material Quality: Provide manufacturer's best-quality paint material of the various coating types specified that are factory formulated and recommended by manufacturer for application indicated. Provide paint containers with manufacturer's standard identification labels. Paint-material containers not displaying manufacturer's project identification will not be acceptable.

D. Colors**:** [Match samples] [As indicated by manufacturer's designations] [As selected from manufacturer's full range]. [As indicated in Finish Schedule – SECTION 09999].

2.3 PREPARATORY COATS

A. Concrete Unit Masonry Block Filler: High-performance latex block filler of finish coat manufacturer and recommended in writing by manufacturer for use with finish coat and on substrate indicated.

B. Exterior Primer: Exterior alkyd or latex-based primer of finish coat manufacturer and recommended in writing by manufacturer for use with finish coat and on substrate indicated.
1. Ferrous-Metal and Aluminum Substrates: Rust-inhibitive metal primer.
2. Zinc-Coated Metal Substrates: Galvanized metal primer.
3. Where manufacturer does not recommend a separate primer formulation on substrate indicated, use paint specified for finish coat.

C. Interior Primer: Interior latex-based or alkyd primer of finish coat manufacturer and recommended in writing by manufacturer for use with finish and on substrate indicated.
1. Ferrous-Metal Substrates: Quick drying, rust-inhibitive metal primer.
2. Zinc-Coated Metal Substrates: Galvanized metal primer.
3. Where manufacturer does not recommend a separate primer formulation on substrate indicated, use paint specified for finish coat.

2.4 EXTERIOR FINISH COATS

A. Exterior Eggshell Acrylic Paint:
1. Benjamin-Moore; Moorcraft Super Spec Low Lustre Latex House Paint No. 185.
2. Coronado; 408-Line Supreme Acrylic Satin Exterior.
3. Dulux Paint; 2402-XXXX Dulux Professional Exterior 100 Percent Acrylic Satin Finish.
4. Kelly-Moore; 1245 Acry-Velvet Exterior Low Sheen Acrylic Finish.

5. M.A.B. Paint; Fresh Kote Latex Eggshell 405 Line.
6. Pittsburgh Paints; 90-400 Series Pitt-Tech One Pack High Performance Waterborne Satin DTM Industrial Enamels.
7. Sherwin-Williams; A-100 Exterior Latex Satin House & Trim Paint A82 Series.

B. Exterior Semi-gloss Acrylic Enamel:
1. Benjamin-Moore; Moorcraft Super Spec Latex House & Trim Paint No. 170.
2. Coronado; 12-Line Supreme Acrylic Semi-Gloss.
3. Dulux Paint; 2406-XXXX Dulux Professional Exterior 100 Percent Acrylic Semi-Gloss Finish.
4. Kelly-Moore; 1250 Acry-Lustre Exterior Semi-Gloss Acrylic Finish.
5. M.A.B. Paint; Sea Shore/Four Seasons Acrylic Latex Trim Enamel 024 Line.
6. Pittsburgh Paints; 6-900 Series SpeedHide Exterior House & Trim Semi-Gloss Acrylic Latex Paint.
7. Sherwin-Williams; A-100 Latex Gloss A8 Series.

C. Exterior Full-Gloss Acrylic Enamel for Concrete, Masonry and Wood:
1. Benjamin Moore; Moore's IMC Acrylic Gloss Enamel M28.
2. Coronado; 414 Super Kote 5000 Acrylic Gloss Enamel.
3. Dulux Paint; 3028-XXXX Dulux Interior/Exterior Acrylic Gloss Finish.
4. Kelly-Moore; 1780 Kel-Guard Acrylic Gloss Enamel.
5. M.A.B. Paint; Rust-O-Lastic Gloss Acrylic (DTM) Maintenance Finish 043 Line.
6. Pittsburgh Paints; 90 Line Pitt-Tech One Pack Interior/Exterior High Performance Waterborne High Gloss DTM Industrial Enamels.
7. Sherwin-Williams; DTM Acrylic Coating Gloss (Waterborne) B66W100 Series.
8. Sherwin-Williams; SuperPaint Exterior High Gloss Latex Enamel A85 Series.

D. Exterior Full-Gloss Acrylic Enamel For Ferrous and Other Metals:
1. Benjamin Moore; Moore's IMC Acrylic Gloss Enamel
2. Coronado; 80 Line Rust Seat Acrylic Latex High Gloss Enamel.
3. Dulux Paint; 3028-XXXX Dulux Interior/Exterior Acrylic Gloss Finish.
4. Kelly-Moore; 5780 DTM Acrylic Gloss Enamel.
5. M.A.B. Paint; Rust-O-Lastic Gloss Acrylic (DTM) Maintenance Finish 043 Line.
6. Pittsburgh Paints; 90-300 Series Pitt-Tech One Pack Interior/Exterior High Performance.
7. Sherwin-Williams; DTM Acrylic Coating Gloss (Waterborne) B66W100 Series.

E. Exterior Full-Gloss Alkyd Enamel:
1. Benjamin Moore; Moore's IMC Urethane Alkyd Enamel M22.
2. Coronado; 123 Line Super Kote 500 High Gloss Alkyd Enamel.
3. Dulux Paint; 4308-XXXX Devguard Alkyd Industrial Gloss Enamel.
4. Kelly-Moore; 1700 Kel-Guard Gloss Alkyd Rust Inhibitive Enamel.
5. M.A.B. Paint; Rust-O-Lastic Finish Coating 074 Line.
6. Pittsburgh Paints; 7-814 Pittsburgh Paints Industrial Gloss-Oil Interior/Exterior Enamel.
7. Sherwin-Williams; Industrial Enamel B-54 Series.

2.5 INTERIOR FINISH COATS

A. Interior Eggshell Acrylic Enamel:
   1. Benjamin Moore; Moorecraft Super Spec Latex Eggshell Enamel No. 274.
   2. Coronado; 30-Line Super Kote 5000 Latex Eggshell Enamel.
   3. Dulux Paint; 1402-XXXX Dulux Professional Acrylic Eggshell Interior Wall & Trim Enamel.
   4. Kelly-Moore; 1610 Sat-N-Sheen Interior Latex Low Sheen Wall and Trim Finish.
   5. Kelly Moore; 1686 Dura-Poxy Eggshell Acrylic Enamel.
   6. M.A.B. Paint; Fresh Kote Latex Satin Eggshell Enamel 405 Line.
   7. Pittsburgh Paints; 6-400 Series SpeedHide Eggshell Acrylic Latex Enamel.
   8. Sherwin-Williams; ProMar 200 Interior Latex Egg-Shell Enamel B20W200 Series.

B. Interior Semi-Gloss Acrylic Enamel:
   1. Benjamin Moore; Moorcraft Super Spec Latex Semi-Gloss Enamel No. 276.
   2. Coronado; 32-Line Super Kote 5000 Latex Semi-Gloss Enamel.
   3. Dulux Paint; 1406-XXXX Dulux Professional Acrylic Semi-Gloss Interior Wall & Trim Enamel.
   4. Kelly-Moore; 1649 Acrylic-Latex Semi-Gloss Enamel.
   5. Kelly Moore; 1685 Dura-Poxy Semi-Gloss Acrylic Enamel.
   6. M.A.B Paint; Fresh Kote Latex Semi-Gloss 410 Line.
   7. Pittsburgh Paints; 6-500 Series SpeedHide Interior Semi-Gloss Latex.
   8. Sherwin-Williams; ProMar 200 Interior Latex Semi-Gloss Enamel B31W200 Series.

C. Interior Full-Gloss Acrylic Enamel:
   1. Benjamin Moore; Moore’s IMC Acrylic Gloss Enamel No. M28.
   2. Coronado; 414 Line Super Kote 5000 Acrylic High Gloss Enamel.
   3. Dulux Paint; 3028-XXXX Dulux Interior/Exterior Acrylic Gloss Finish.
   4. Kelly-Moore; 1680 Dura-Poxy Gloss Acrylic Enamel.
   5. M.A.B. Paints; Rich Lux Architectural High Gloss Latex Enamel 022-127 Line.
   6. Pittsburgh Paints; 6-8534 SpeedHide Interior Latex 100 Percent Acrylic Gloss Enamels.
   7. Pittsburgh Paints; 90-374 Pitt-Tech One Pack Interior/Exterior High Performance Waterborne High Gloss DTM Industrial Enamel.
   8. Sherwin-Williams; ProMar 200 Interior Latex Gloss Enamel B21W201.

D. Interior Semi-Gloss Alkyd Enamel:
   1. Benjamin Moore; Moorcraft Super Spec Alkyd Semi-Gloss Enamel No. 271.
   2. Coronado; 27-Line Super Kote 5000 Alkyd Semi-Gloss Enamel.
   3. Dulux Paint; 1516-XXXX Ultra-Hide Alkyd Semi-Gloss Interior Wall & Trim Enamel.
   4. Kelly-Moore; 1630-Kel-Cote Interior Alkyd Semi-Gloss Enamel.
   5. M.A.B. Paint; Fresh Kote Semi-Gloss 403 Line.
   6. Pittsburgh Paints; 6-1110 Series SpeedHide Interior Enamel Wall & Trim Semi-Gloss Oil.
   7. Sherwin-Williams; ProMar 200 Interior Alkyd Semi-Gloss Enamel B34W200 Series.

E. Interior Full-Gloss Alkyd Enamel for Gypsum Board and Plaster:
   1. Benjamin Moore; Moore’s IMC Urethane Alkyd Enamel No. M22.

2. Coronado; 123 Line Super Kote 5000 High Gloss Alkyd Enamel.
3. Dulux Paint; 4308-XXXX Devguard Alkyd Industrial Gloss Enamel.
4. Kelly-Moore; 1700 Kel-Guard Alkyd Rust Inhibitive Enamel.
5. M.A.B. Paints; Rich Lux Architectural Bright White Enamel 026-127 Line.
6. Pittsburgh Paints; 7-814 Series Pittsburgh Paints Industrial Gloss-Oil Interior/Exterior Enamel.
7. Sherwin-Williams; ProMar 200 Alkyd Gloss Enamel B35W200 Series.

F. Interior Full-Gloss Alkyd Enamel for Wood and Metal Surfaces:
1. Benjamin Moore; Moore's IMC Urethane Alkyd Enamel No. M22.
2. Coronado; 123 Line Super Kote 5000 High Gloss Alkyd Enamel.
3. Dulux Paint; 4308-XXXX Devguard Alkyd Industrial Gloss Enamel.
4. Kelly-Moore; 1630—Kel-Cote Interior Alkyd Semi-Gloss Enamel.
5. M.A. B. Paint; Rich Lux Architectural Bright White Enamel 026-127 Line.
6. Pittsburgh Paints; 7-814 Series Pittsburgh Paints Industrial Gloss-Oil Interior/Exterior Enamel.
7. Sherwin-Williams; ProMar 200 Alkyd Gloss Enamel B35W200 Series.

G. Interior Semi-Gloss White Dryfall Spray Paint: Provide the following finish system for repainting existing plant ceilings, including underside of metal roof deck and structural steel roof framing, trusses, beams, purlins, etc.
1. One finish coat over all surfaces: Semi-gloss white dryfall spray paint applied at spreading rate recommended by manufacturer for complete hiding of previously painted surfaces.
   a. ICI Dulux Paints #1486-12000 Dryfall Semi-Gloss Finish.
   b. Sherwin-Williams #B42W2 Semi-Gloss White Dry Fall.
   c. PPG Paints #6-714 Speedhide Dry Fog.

PART 3 EXECUTION

3.1 EXAMINATION AND ACCEPTANCE OF CONSTRUCTION IN PLACE

A. Examine construction in place with applicator on which the work of this SECTION is dependent. Defects which may influence satisfactory completion and performance of the work of this SECTION shall be corrected per the requirements of the applicable SECTION of the SPECIFICATIONS prior to commencement of the work. Do not start work until defects have been corrected and surfaces are cured and dry. Commencement will be construed as construction in place being acceptable for satisfying the requirements of this SECTION.

B. Coordination: Review primer and undercoating specifications of other sections to provide compatibility of finish coats and substrates. Provide requested information on finish coats to other to ensure compatibility of finish coats and substrates.
1. Notify the Owner's Representative about compatibility concerns of specified paints and finish coatings and other primers and substrates.

3.2 PREPARATION OF SURFACES

A. General
   1. Prepare surfaces to be painted as part of the WORK in accordance with instructions which follow.
   2. NOTE: The WORK may not require the use of all surface preparation instructions specified.

B. Remove hardware from doors and other miscellaneous hardware, plates, lights and miscellaneous items. Mask and cover items impractical to move or dissassemble before preparation of surfaces and painting.
   1. Remove masking and covering after painting and reinstall hardware, lights and accessories with workmen skilled in their installation.

C. Clean substrates of grease, oil and materials detrimental to the bonding of the coatings.
   1. Schedule cleaning before painting to prevent dusts from cleaning from falling on and damaging newly painted surfaces.

D. Preparation of Surfaces: Provide cleaning and preparation of surfaces according to the written instructions of the manufacturer for each substrate specified.
   1. Provide barrier coatings between incompatible primers and surface coats or remove the incompatible primers and reprime with a compatible primer.

E. Ferrous Metals
   1. Unprimed: Clean ferrous metal surfaces that have not been primed, removing oil, grease, dirt, mill scale and other detrimental materials. Use cleaning methods recommended by the Steel Structures Painting Council (SSPC) by cleaning solvents or mechanical means.
   2. Unprimed: Blast clean per SSPC-SP6 for Commercial Blast Cleaning.
   3. Unprimed: Provide metal treatment wash for bare, sandblasted or pickled metal before painting.
   4. Shop Primed: Remove grease, rust, scale and dust, and touch up, with metal or zinc-chromate primer, chipped and abraded places, weld scars, rust spots, and other spots where the prime coat is damaged.
   5. Zinc-Coated: Wash with mineral spirits. Remove white deposit on weathered surfaces with soap and water, and rinse with clean water.

F. Cementitious Materials: Concrete, concrete masonry block, and cement plaster.
   1. Remove efforescence, dirt, chalk, dust, grease and oil.
   2. Roughen glazed surfaces.
   3. Perform test to determine moisture content of the substrate. Do not paint surfaces that exceed the limits permitted by the manufacturer's written instructions.
   4. Perform test to determine alkalinity of the substrate. Do not paint surfaces that exceed the limits permitted by the manufacturer's written instructions.

G. Masonry
   1. Smooth surface by grinding, stoning or scraping. Clean free of efflorescence, dirt, dust, chalk, grease and oils.

2. Upon testing, if surfaces are sufficiently alkaline to cause paint to blister or burn, sponge surface with a zinc-sulphate solution consisting of 2 lbs. zinc-sulphate to one gallon of water. When solution is dry, brush off the crystals prior to painting.

H. Concrete
1. Smooth surfaces by grinding, stoning, or scraping. Clean free of efflorescence, dirt and dust.
2. Surfaces Which Are Highly Glazed or Have Traces of Form Oil: Treat with a preparation of acid detergent concentration and dilute muriatic acid. For this treatment, mix one part concentrated muriatic acid and 4 parts water, and then add one part of acid detergent. Remove the acid with clean water.
3. Stains from the Weathering of Corroded Metals: Remove with a solution of 2 ounces of sodium metasilicate in one gallon of water. Thoroughly wet stained areas on weathered surfaces with water before application of solution.
4. Roughen all floor slabs to be painted either by shot blasting or acid etching. For acid etching, follow paint manufacturer's recommendations and reclaim all drainage. Surface texture shall be similar to "fine grit" sand paper.
5. Test floor slabs for moisture as recommended by ASTM D4263 using 24 inch square segments of plastic sheet, placed for 48 hours. Perform one test for every 200 square feet of floor to be painted. If acid etching was used as surface preparation, perform moisture test <u>after</u> removal of acid.

I. Gypsum Board
1. Before painting, allow joint treatment to dry completely. Clean surfaces of dirt and dust.

J. Non-Ferrous Metals
1. Aluminum: Wipe with recommended solvent for oil and grease.
2. Terne Metal: Spot clean with recommended solvent for oil and grease.

K. Existing Construction
1. Existing Painted Surfaces to be Painted: Paint existing painted surfaces damaged by the WORK of this CONTRACT, existing painted items being relocated, and other existing surfaces scheduled or noted to be painted, to match adjacent existing unless noted or specified otherwise.
   a. Remove loose paint by scraping, and sand to feather-edge all areas where paint has been scraped off, chipped or peeled.
   b. Clean free of dirt, dust and other surface accumulations by washing; rinse and allow to dry thoroughly prior to application of new paint materials.
2. Existing Metal Surfaces to be Painted: Prime paint bare areas.

L. Preparation of Primers, Paints and Coatings:
1. Follow manufacturer's written instructions for preparation and mixing.
2. Maintain mixing containers and application equipment in clean condition without residue and other paint contaminants.
3. Stir or mix paints to a uniform consistency.

4. Remove surface films in paint containers. Strain paint materials to remove residue or contaminants.
5. Thin paint material within the limits set in the manufacturer's written instructions. Only use thinners approved by the manufacturer.

3.3 PAINT APPLICATION

A. General
1. Apply paint in accordance with the paint manufacturer's recommendations and instructions which follow.
2. All spaces shall be broom clean before painting is started.
3. Surfaces to be painted shall be clean, dry, smooth and protected from dampness.
4. Do not finish-paint equipment or piping prior to test and approval.
5. Do not paint piping, duct and equipment surfaces while such surfaces are hot.
6. Make edges of paint adjoining other materials and colors, sharp and clean, without overlapping.
7. Allow each coat of paint to dry at least 24 hours before succeeding coat is applied, unless manufacturer's printed directions recommend otherwise.
8. Paint coats, as specified under "PAINTING SCHEDULE", are intended to cover surfaces perfectly. If surfaces are not adequately covered, as determined by the OWNER'S REPRESENTATIVE, apply further coats to achieve complete coverage of surfaces at no additional cost to OWNER.
   a. Each prime coat, intermediate coat, and finish coat shall have a <u>minimum</u> dry film thickness of 1.5 mils unless specified otherwise.
9. Finished work shall be uniform, of approved color, and free from defective brushing, spraying or rolling, and clogging or excessive flooding.
10. Paint exposed surfaces. "Exposed surfaces" means all surfaces or areas visible when the permanent construction is completed, and when al built-in cabinets, fixtures, convector covers, grilles and similar items are in place. "Exposed surfaces" shall include all surfaces or areas in back of cabinets, furniture, equipment and other items that are not built-in or fixed in place, and also shall include all surfaces visible through grilles, louvers and registers, and all roof-mounted ferrous metal items.
11. Surfaces visible through grilles, louvers and registers shall be painted flat black.
12. Apply one prime coat to wall surfaces directly behind fixed or built-in cabinets, millwork or fixtures before final installation.
13. Paint top, sides and bottom edges of all interior and exterior doors.
14. Sand lightly between coats
15. Provide finish on the interior of casework and millwork to match the exterior of the casework or millwork.

B. Scheduling: Promptly apply first coat to surfaces after pretreatment to prevent surface deterioration.
1. Apply succeeding coats only when the previous coat has dried per manufacturer's instructions. Sand between coats per manufacturer's instructions.
2. Provide adequate time between coats to allow drying. Do not apply successive coat to tacky or sticky surfaces.

3. Finish coat must be uniform in color and appearance and must cover the undercoats. If necessary apply additional coats to provide uniform color and appearance.

C. Paint Mixing
1. Perform in accordance with directions of manufacturer.

D. Methods Of Application
1. Brush (B), Roller (R) or Spray (S) application may be used in accordance with the following:

SURFACE	PRIMER	INTERMEDIATE COAT(S)	FINISH COAT
Ferrous Metal			
Primed	---	B, R or S	B, R or S
Unprimed	B	B, R or S	B, R or S
Masonry	R or S	R or S	R or S
Gypsum Wallboard	R or S	R or S	R or S
Wood			
Primed	---	B	B
Unprimed	B	B	B
Concrete	R or S	R or S	R or S
Non-ferrous Metal			
Primed	---	B, R or S	B, R or S
Unprimed	B	B, R or S	B, R or S

2. If brush application is preferred where roller or spray is specified, brush application will be allowed provided the filling in of voids and coverage of the surface is equivalent to smooth surface specified.
3. Regardless of the method of application (brush, roller or spray) used, the finished surface shall be smooth and free from runs, sags, utensil marks, or clogs.

E. Small Cracks In Concrete and Masonry Surfaces
1. Before application of succeeding coats, fill with an approved spackling compound, small cracks, holes and other similar imperfections which show up in concrete and masonry surfaces after the primer-sealer has been applied to the surface.

F. Mechanical and Electrical Work: Paint mechanical and electrical work items which will be exposed to view after completion of the building to match adjacent surfaces, except for prefinished or plated surfaces.
1. Painting of mechanical items includes but is not limited to the following: piping, valves, pipe hangers, piping supports, tanks, ducts, insulation, heat exchangers, motors, fans and pumps.
2. Painting of electrical items includes but is not limited to the following: conduit, fittings, switchgear, panel boards, boxes, unfinished equipment and auxiliary metal including hangers, supports, anchors and accessories.

G. Block Fillers: Ensure that filler completely covers pores in masonry block.

H. Final Touch Up: At completion after all adjacent work has been completed, touch up and restore finish where damaged.

I. Completed Work: Verify that color, texture and coverage match approved paint samples. Repaint or refinish non-compliant Work and leave in specified condition.

3.4 COLORS

A. Colors shall be in accordance with color schedule furnished by the ARCHITECT-ENGINEER. No extras will be approved because of the color variety selected by the ARCHITECT-ENGINEER.

B. Tint the primers and intermediate coats a different color to distinguish between the several coats, and as required by color selected for the final coat.

C. Unless otherwise required by the color schedule, or specified:
   1. Paint ferrous metal items of mechanical and electrical work to match color and sheen of adjacent wall and ceiling surfaces.
   2. Paint the interiors of ducts exposed to view at grilles, registers and air intakes a flat black.
   3. Paint surfaces in areas requiring alteration work to match color and sheen of respective existing finishes.

3.5 FIELD QUALITY CONTROL

A. The Owner reserves the right to engage a testing agency to perform test procedures the Owner deems necessary during application of the paint finishes.
   1. The testing agency will take paint samples of the materials delivered to the site. Samples will be identified, sealed and certified in the presence of the Contractor.
   2. The testing agency will perform the following tests as directed by the Owner:
      a. Adhesion.
      b. Resistance to abrasion.
      c. Reflectivity.
      d. Flexibility.
      e. Washability.
      f. Absorption.
      g. Accelerated weathering.
      h. Dry opacity.
      i. Accelerated yellowness.
      j. Recoating.
      k. Skinning.
      l. Retention of color.
      m. Resistance to alkali and mildew.
      n. Quantitative material analysis.
   3. If the testing procedures indicate noncompliance to requirements, the Owner may direct the Contractor to stop painting and remove noncompliant paint materials from the site. Also, the Contractor will be responsible to repaint or remove and repaint noncompliant painted

surfaces if the surface requiring repainting is incompatible with the rejected painted surface.

3.6 CLEAN-UP

A. Remove soiled rags, empty paint containers and other paint debris from the site daily. Dispose of waste materials in a legal manner.

B. Remove paint spatters from adjacent surfaces in a manner that does not damage the surface. Clean or wash adjacent surfaces to restore acceptable finish appearance.

3.7 PROTECTION

A. Protect installed work by others, including work not painted, from damage by painting. Provide appropriate masking and coverings over adjacent construction. Clean, repair, replace or repaint damaged surfaces as approved by the Owner's Representative.
   1. Before start of painting, remove finish hardware, accessories, plates and similar items in place, or provide ample protection of such items as approved by the Owner's Representative. Do not remove UL labels on doors and frames.
   2. Remove doors, if necessary, to paint top and bottom edges.
   3. Upon completion of painting, reinstall removed items.
   4. Use only workmen skilled in the applicable building trade for removal and replacement of finished items.
   5. Close off the various spaces while painting, and exclude dust until the finish is dry. Post "Wet Paint" signs as required to protect newly finished spaces.
   6. At completion of this work in a space, remove paint spots from floors, glass and other surfaces. Leave finished space clean and in acceptable condition.
   7. At completion of work in area protected by fire protection system, remove the temporary covers on the fire protection sprinkler heads.
   8. At completion of painting, remove masking, wrappings, coverings and posted signs.

PART 4 PAINTING SCHEDULE

4.1 INCLUSIONS

A. Except for those items, surfaces and areas listed under "EXCLUSIONS", include in the work of this SECTION, the painting of all work that is customarily painted to provide a complete job, including mechanical and electrical work, whether or not each such item, surface or area is specifically shown or specified. Paint work that is not specifically shown or specified, same as similar work or, where no similarity exists, paint with a system directed by the OWNER'S REPRESENTATIVE.

B. Paint unpainted existing surfaces exposed by alteration and removal work where such surfaces will remain exposed in painted areas.

C. Prior to the application of paint, prepare the respective surfaces to receive paint per the requirements specified under “PREPARATION OF SURFACES”.

4.2 EXCLUSIONS

A. Unless one or more of the following items, surfaces or areas are specifically included under a specified paint system to be painted, exclude from painting under this SECTION, the following:
   1. Shop prime painting and products having factory finish.
   2. Face brick, paving brick and quarry tile.
   3. Glazed surfaces of glazed concrete masonry and structural glazed facing tile.
   4. Concrete floors with chemical hardener finish.
   5. Finished floor, wall and ceiling materials, such as resilient flooring, carpeting, vinyl fabric wall covering, and acoustical ceilings.
   6. Plastic laminate-covered surfaces.
   7. Copper, stainless steel, brass, bronze and chromium-plated surfaces.
   8. Aluminum.
   9. Glass.
   10. Glazing compound and sealants.
   11. Roofing and non-ferrous flashing materials.
   12. Sprayed fireproofing.
   13. Concealed construction, such as wall surfaces and mechanical and electrical systems within suspended ceiling spaces, wall shafts, chases and furred spaces.
   14. Nameplates and UL labels on doors and frames. Be responsible for ensuring that all nameplates and UL labels are not painted.
   15. Gages, thermometers and other recording devices.
   16. Moving parts of mechanical equipment, such as shafts, valve stems, etc.

4.3 EXTERIOR FERROUS METAL SYSTEMS

A. Full Gloss Finish
   1. Surfaces: Exterior steel, iron and zinc-coated (galvanized) surfaces not generally exposed to public view, such as: Roof hatches, roof-mounted mechanical equipment and supports, structural steel and miscellaneous metal fabrication items.
   2. First Coat; Ferrous Metal Primer: For bare steel and touch up of shop coat or existing finish.
   3. First Coat; Galvanized Metal Primer: For zinc-coated surfaces.
   4. Second Coat: Exterior Alkyd Gloss Enamel.
   5. Third Coat: Exterior Alkyd Gloss Enamel.

B. Semi-Gloss Finish
   1. Surfaces: Exterior steel, iron and zinc-coated (galvanized) surfaces generally exposed to public view, such as: Hollow metal doors and frames, steel truck doors and frames, steel windows, steel louvers, structural steel and miscellaneous metal fabrication items.
   2. First Coat; Ferrous Metal Primer: For bare steel and touch-up of shop coat or existing finish.
   3. First Coat; Galvanized Metal Primer: For zinc-coated surfaces.

4. Second Coat: Exterior Acrylic Latex Semi-Gloss Enamel.
5. Third Coat: Exterior Acrylic Latex Semi-Gloss Enamel.

C. Eggshell Finish
1. Surfaces: Exterior steel, iron and zinc-coated (galvanized) surfaces generally exposed to public view, such as: Hollow metal doors and frames, steel truck doors and frames, steel windows, steel louvers, structural steel and miscellaneous metal fabrication items.
2. First Coat; Ferrous Metal Primer: For bare steel and touch-up of shop coat or existing finish.
3. First Coat; Galvanized Metal Primer: For zinc-coated surfaces.
4. Second Coat: Exterior Acrylic Latex Low Luster Paint.
5. Third Coat: Exterior Acrylic Latex Low Luster Paint.

4.4 EXTERIOR CONCRETE AND CONCRETE MASONRY SYSTEMS

A. Full-Gloss Finish
1. Surfaces: Exterior concrete and concrete masonry construction.
2. First Coat (required on concrete masonry only): Block Filler.
3. Second Coat: Exterior Acrylic Latex Semi-Gloss Enamel.
4. Third Coat: Exterior Acrylic Latex Semi-Gloss Enamel.

4.5 EXTERIOR NON-FERROUS METAL SYSTEMS

A. Full Gloss Finish
1. Surfaces: Exterior aluminum.
2. First Coat: Non-Ferrous Metal Primer.
3. Second Coat: Exterior Alkyd Gloss Enamel.
4. Third Coat: Exterior Alkyd Gloss Enamel.

4.6 INTERIOR FERROUS METAL SYSTEMS

A. Full Gloss Finish
1. Surfaces: Interior steel and zinc-coated (galvanized) surfaces set in floor or mounted in walls where subject to wear, such as: Floor curbs and frames, steel grating, steel stair risers and portions of stringers exposed to foot traffic, steel pipe railings and hand rails, and steel ladders.
2. First Coat; Ferrous Metal Primer: For bare steel and touch up of shop coat.
3. First Coat; Galvanized Metal Primer: For zinc-coated surfaces.
4. Second Coat: Interior Alkyd Gloss Enamel.
5. Third Coat: Interior Alkyd Gloss Enamel.

B. Semi-Gloss Finish
1. Surfaces: Hollow metal frames and doors, steel stair surfaces exposed to public view except risers and portions of stringers exposed to foot traffic, vault door and frame, and elevator and dumbwaiter hoistway doors and frames.
2. First Coat; Ferrous Metal Primer: For bare steel and touch up of shop coat.
3. First Coat; Galvanized Metal Primer: For zinc-coated surfaces.

4. Second Coat: Interior Alkyd Semi-Gloss Enamel.
5. Third Coat: Interior Alkyd Semi-Gloss Enamel.

C. Eggshell Finish
1. Surfaces: Structural steel, steel joists, underside of metal roof deck and floor deck. Also metal surfaces not otherwise specified, exposed to public view at ceilings in toilets and baths, and at walls, such as: Metal access doors, convector covers, bare piping, ducts, grilles, registers, conduit and other miscellaneous paintable metal surfaces.
2. First Coat; Ferrous Metal Primer: For bare steel and touch up of shop coat.
3. First Coat; Galvanized Metal Primer: For zinc-coated surfaces.
4. Second Coat: Interior Acrylic Low Luster Enamel.
5. Third Coat: Interior Acrylic Low Luster Enamel.

D. Machinery Enamel Finish
1. Surfaces: Mechanical equipment, machinery and appliances, including motors, starters and control equipment, such as: Pumps, compressors, fans, unit heaters, ventilators and air conditioning units. Exclude machined parts.
2. First Coat; Ferrous Metal Primer: For bare steel and touch up of shop coat.
3. First Coat; Galvanized Metal Primer: For zinc-coated surfaces.
4. Second Coat: Machinery Enamel.
5. Third Coat: Machinery Enamel.

4.7 INTERIOR MASONRY SYSTEMS

A. Eggshell Finish
1. Surfaces: Interior concrete masonry wall surfaces exposed to view, and not otherwise specified.
2. First Coat: Block Filler.
3. Second Coat: Interior Acrylic Low Luster Enamel.
4. Third Coat: Interior Acrylic Low Luster Enamel.

4.8 INTERIOR GYPSUM BOARD SYSTEMS

A. Full-Gloss Finish
1. Surfaces: Gypsum board as indicated.
2. First Coat: Interior Alkyd Primer – Sealer.
3. Second Coat: Interior Alkyd Gloss Enamel.
4. Third Coat: Interior Alkyd Gloss Enamel.

B. Semi-Gloss Finish
1. Surfaces: Gypsum board as indicated.
2. First Coat: Interior Alkyd Primer – Sealer.
3. Second Coat: Interior Alkyd Semi-Gloss Enamel.
4. Third Coat: Interior Alkyd Semi-Gloss Enamel.

C. Eggshell Finish
   1. Surfaces: Gypsum board ceilings in toilets and baths, and surfaces of all gypsum board walls exposed to view.
   2. First Coat: Interior Latex Primer-Sealer.
   3. Second Coat: Interior Acrylic Low Luster Enamel.
   4. Third Coat: Interior Acrylic Low Luster Enamel.

4.9 INTERIOR GYPSUM SYSTEMS

A. Full-Gloss Finish
   1. Surfaces: Plaster as indicated.
   2. First Coat: Interior Alkyd Primer-Sealer.
   3. Second Coat: Interior Alkyd Gloss Enamel.
   4. Third Coat: Interior Alkyd Gloss Enamel.

B. Semi-Gloss Finish
   1. Surfaces: Plaster as indicated.
   2. First Coat: Interior Alkyd Primer-Sealer.
   3. Second Coat: Interior Alkyd Semi-Gloss Enamel.
   4. Third Coat: Interior Alkyd Semi-Gloss Enamel.

C. Eggshell Finish
   1. Surfaces: Plaster ceilings in toilets and baths, and surfaces of plaster walls exposed to view.
   2. First Coat: Interior Latex Primer-Sealer.
   3. Second Coat: Interior Acrylic Low Luster Enamel.
   4. Third Coat: Interior Acrylic Low Luster Enamel.

4.10 INTERIOR CONCRETE SYSTEMS

A. Semi-Gloss Enamel Finish
   1. Surfaces: Interior concrete wall surfaces in areas shown on the Finish Schedule as “paint”.
   2. First Coat: Interior Latex Primer Sealer.
   3. Second Coat: Interior Alkyd Semi-Gloss Enamel.
   4. Third Coat: Interior Alkyd Semi-Gloss Enamel.

END OF SECTION

Revision History	
Date	**Rev. No.**
A	0
B	0
C	0
D	0
E	0
F	0
02-19-09	0

DS/djo [AR, ME]
C:\d\timsdatasf\brookhaven_national_laboratory\sf070003\200-projexec\280-spec\09900.doc

SECTION 09960

HIGH PERFORMANCE COATINGS

PART 1 GENERAL

1.1 SUMMARY

A. Scope
   1. Provide all material, labor and equipment to produce finished surfaces with high performance coatings as shown and scheduled on the DRAWINGS and as specified herein, to provide properly finished surfaces throughout. This SECTION, in conjunction with the color/finish schedules on the DRAWINGS or in the SPECIFICATIONS or issued separately, establishes the scope of the coating work, the surfaces to be coated, and the coating systems to be used.
      a. Also coat existing surfaces where scheduled.
   2. All interior painting and coatings to meet limits established by the Green Seal Standard GS-11 and as required to meet the minimum requirements of LEED NC 2.2.

B. Related Work Specified Under Other Sections
   1. Painting – DIVISION 9.
   2. Shop prime painting of steel surfaces - DIVISION 5.
   3. Coating Color Selection: Finish Schedule.

1.2 DEFINITIONS

A. General: High performance coating includes epoxies, enamels, emulsions and other coatings whether used as prime, intermediate, or finish coats.

B. Terminology: ASTM D16.

C. Gloss: Range per National Paint and Coatings Association (NPCA).
   1. Flat: Matte finish with a gloss range below 15 when measured at an 85 degree meter.
   2. Eggshell: Low sheen finish with a gloss range between 5 and 20 when measured at a 60 degree meter.
   3. Satin: Low sheen finish with a gloss range between 15 and 35 when measured at a 60 degree meter.
   4. Semi-gloss: Medium sheen finish with a gloss range between 30 and 65 when measured at a 60 degree meter.
   5. Full gloss: High sheen finish with a gloss range greater than 65 when measured at a 60 degree meter.

1.3 QUALITY ASSURANCE

A. Regulatory Requirements
   1. Coating materials and application techniques shall comply with local air quality requirements.

B. Sample Areas
   1. Coat sample areas not less than 30 square feet, in locations as directed by the OWNER'S REPRESENTATIVE, to establish standards of quality and workmanship to be expected of coating Work on the PROJECT. Sample coated areas will be inspected by the OWNER'S REPRESENTATIVE, and, if approved, will be used as a basis by which the acceptability of the completed painting on the PROJECT will be judged.
   2. Adhesion tests shall be required before proceeding with coating.

C. Testing: Testing Laboratory Shall Have The Following Responsibilities
   1. CONTRACTOR shall hire testing laboratory to do testing.
   2. Analyze the existing painted surface to determine the type of paint (including primer) and number of existing paint layers that exist.
   3. Determine if contaminants or ill bonding paint layers are present.
   4. What type of contaminants are present and what proposed surface preparation is required.
   5. Perform a minimum of one adherence test in each area, minimum of one per 1000 s.f., or as required due to the existing conditions of the area to be coated.
   6. Testing Laboratory shall recommend proper cleaning methods, along with the scraping and sanding routine, to properly make the surfaces to be coated acceptable to the new coating material.
   7. After the cleaning process, recommend primer system for the existing surfaces.
   8. After surfaces are properly prepared and primed, recommend the type of coating system and material best suited for the existing conditions.
   9. The testing laboratory may do other testing to properly define the existing conditions and to analyze what the proper coating system should be.
   10. Where any contaminants, such as asbestos, lead, or other carcinogens, are found to be present, the laboratory shall notify the OWNER'S REPRESENTATIVE for proper disposal of the contaminant without delaying the construction process.

1.4 SUBMITTALS

A. Furnish submittals for items that are identified in this SECTION by a different typeface and a bracketed code (e.g., *Item [L]*). Refer to SECTION 01340 for definition of codes for types of submittals and the administrative requirements governing submittal procedure. Additional submittal requirements pertaining to this SECTION are specified herein under this Article.

B. *High Performance Coating Product Data [P]*: Provide product data for each coating system including fillers and primers.
   1. Provide a material list of all coatings and paints. Cross reference each specific coating, finishing system and application with each material and identify each material by catalog number of the manufacturer and general classification.

2. Provide manufacturer's application instructions and technical information regarding label analysis, storage and handling.
3. The manufacturer shall certify that coating and paint materials comply with regulations for use of volatile organic compounds (VOC's).

C. *Coating Color Samples [S]*: Submit color samples, showing coating system manufacturer's standard color range and sheens for each coating system specified. Sample shall be not less than 12 square inches in size.

D. After receipt of color samples and before commencement of the WORK, the ARCHITECT-ENGINEER will furnish a color schedule, showing the location of the various colors. Refer to the article "COLORS", herein.

E. Paint Fire Hazard Classification: Submit certificates stating that materials meet fire hazard classification as specified.

F. Qualification data: Provide qualification data for firms and personnel specified in "Quality Assurance" indicating performance, experience and capability. Provide list of references and completed projects, including names and addresses of owners and clients.

1.5 DELIVERY, STORAGE, AND HANDLING

A. Delivery
1. Deliver specified products to site in unopened, sealed containers bearing manufacturer's name, brand name, type and color of coatings, and instructions for application, including the following:
a. Product name or title of material.
b. Product description.
c. Manufacturer's stock number and date of manufacture.
d. Contents by volume, for pigment and vehicle constituents.
e. Thinning instructions.
f. Color name and number.
g. VOC content.

B. Storage
1. Store products in the space designated for the storage and mixing of coatings. Whenever it may be necessary to change the location of storage space, promptly move products to the newly designated space, without additional cost to the OWNER.
2. Refer to the article "PROTECTION" in Part 3.
3. Store paint materials in ventilated areas at a minimum temperature of 45 degF (7 degC). Keep containers tightly covered. Maintain containers and storage area in clean condition.
4. Protect paint materials storage space from damage. Remove contaminated rags and waste from premises every day. Take all precautions to prevent fire, including spontaneous combustion.
5. Unless a room or area in the building is designated by the Owner's Representative for storage of paint materials, provide a temporary outside storage shed for storage of paint materials.

6. If the Owner's Representative designates temporary storage space in the building, store materials so that they do not interfere with the Owner's operations or the work of others. Move materials when directed to do so by the Owner's Representative at no cost to the Owner. Protect existing surfaces from damage or defacement. On completion of painting operations, leave temporary storage spaces in building clean.
7. Comply with provisions specified under "Fire Protective Measures" of the "Construction General Conditions". Take every precaution to avoid spontaneous combustion. Keep cloths, cotton waste, oily rages, and similar fire hazardous, combustible materials in metal containers. Remove containers from the building every night.

1.6 PROJECT CONDITIONS

A. Environmental Requirements
   1. Do not apply exterior coatings in damp or rainy weather, nor until surface has dried from the effects of such weather.
   2. Do not apply coatings when ambient and surface temperatures are less than 45 degF (7.2 degC) or greater than 95 degF (35 degC).
   3. Do not apply paint when the relative humidity is greater than 85% or when temperatures are less than 5 degF (3 degC) above the dew point.
      a. Interior painting is allowed in damp and rainy weather when the interior areas are enclosed and heated and ventilated in accordance with the temperature and humidity requirements of manufacturer.

B. Provide all scaffolds, drop cloths, ladders and other equipment required for the proper execution of the work.

1.7 EXTRA MATERIALS

A. Furnish extra materials that match products installed and that are package with protective covering for storage and identified with labels describing contents.
   1. High-Performance Coatings: Full, unused containers equal to 5 percent of each material and color applied, but not less than 1 gal. (3.785 L) or 1 case, as appropriate.

PART 2 PRODUCTS

2.1 MANUFACTURERS

A. Products: Subject to compliance with requirements, provide one of the products listed in other Part 2 Articles.

B. Manufacturer's Names: Shortened version(shown in parentheses) of the following manufacturer's names are used in other Part 2 Articles:
   1. Benjamin Moore & Co., (Moore).
   2. Carboline Company (Carboline).
   3. Dupont Company (Dupont).
   4. ICI Dulux, Inc. (ICI).

5. International Protective Coatings (International).
6. PPG Industries, Inc, (PPG).
7. Rust-Oleum Co. (R-O).
8. Sherwin-Williams Co. (S-W).
9. Tnemec (Tnemec).

2.2 MATERIALS, GENERAL

A. Provide approved coating material for each coating type required for the Work.

B. Material Compatibility: Provide block fillers, primers, and finish-coat materials that are compatible with one another and with the substrates indicated under conditions of service and application, as demonstrated by manufacturer based on testing and field experience.

C. Material Quality: Provide manufacturer's best-quality coating material of the various coating types specified that are factory formulated and recommended by manufacturer for application indicated. Coating-material containers not displaying manufacturer's project identification will not be acceptable.

D. Colors**:** [Match samples] [As indicated by manufacturer's designations] [As selected from manufacturer's full range]. [As indicated in Finish Schedule – SECTION 09999].

2.3 PREPARATORY COATS

A. Block Filler: Acrylic or epoxy block filler of topcoat manufacturer.

B. Primer: Acrylic or epoxy primer of topcoat manufacturer recommended in writing by manufacturer for use with intermediate and topcoats and substrate indicated under environment conditions indicated.

C. Intermediate Coat: Epoxy intermediate coat of topcoat manufacturer recommended in writing for use with primer, and topcoat, and substrate indicated under environmental conditions indicated.

2.4 INTERIOR HIGH-PERFORMANCE TOPCOATS

A. Moderate-Environment, Semigloss Epoxy:
   1. Products:
      a. Carboline; Sanitile 250 WB Finish Waterborne Epoxy-Acrylic, unless otherwise indicated.
         1) Concrete and Masonry (Other Than Concrete Masonry Unit) Substrates: 888 2-Component Polyamide Epoxy.
      b. DuPont; 25P High Solids Epoxy Mastic.
      c. ICI; Tru-Glaze-WB 4406 Waterborne Epoxy Semigloss Coating, unless otherwise indicated.
         1) Concrete Masonry Unit Substrates: Devran 224 HS High Build Epoxy Enamel.
      d. International; Intergard 475 Semi-Gloss Polyamide Epoxy Intermediate/Finish.

e. PPG; 97-1XXX Series Aquapon High Build Semi-Gloss Polyamide Epoxy Coating.
f. R-O; 9500 System High Build Polyamide Epoxy at 5.0- to 8.0-mil (0.127- to 0.203-mm) dry film thickness.
g. S-W; Epolon II Multi-Mil Epoxy Series B62V800.
h. Tnemec; Series 66 Hi-Build Epoxoline Polamidoamine Epoxy.

PART 3 EXECUTION

3.1 EXAMINATION AND ACCEPTANCE OF CONSTRUCTION IN PLACE

A. Examine construction in place on which the work of this SECTION is dependent. Defects which may influence satisfactory completion and performance of the work of this SECTION shall be corrected per the requirements of the applicable SECTION of the SPECIFICATIONS prior to commencement of the work. Commencement will be construed as construction in place being acceptable for satisfying the requirements of this SECTION.

B. Coordination of Work: Review other Sections in which primers or other coatings are provided to ensure compatibility of total systems for various substrates. On request, furnish information on characteristics of specified finish materials to ensure compatible primers.
   1. If a potential incompatibility of primers applied by others exists, obtain the following from primer Applicator before proceeding:
      a. Confirmation of primer's suitability for expected service conditions.
      b. Confirmation of primer's ability to be topcoated with materials specified.
   2. Notify Owner's Representative about anticipated problems before using coatings specified over substrates primed by others.

3.2 PREPARATION OF SURFACES

A. Preparation:
   1. Remove plates, machined surfaces, and similar items already in place that are not to be coated. If removal is impractical or impossible because of size or weight of item, provide surface-applied protection before surface preparation and coating.
      a. After completing coating operations, reinstall items that were removed; use workers skilled in the trades involved.

B. General
   1. Prepare surfaces to be painted as part of the WORK in accordance with instructions which follow.
   2. Cleaning: Before applying high-performance coatings, clean substrates of substances that could impair bond of coatings. Remove oil and grease before cleaning.
   3. Provide barrier coats over incompatible primers or remove primers and reprime substrate.
   4. NOTE: The WORK may not require the use of all surface preparation instructions specified.

C. Ferrous Metals
   1. Unprimed: Blast clean per SSPC-SP6 for Commercial Blast Cleaning.

2. Shop Primed: Remove grease, rust, scale and dust, and touch up, with metal primer, chipped and abraded places, weld scars, and other spots where the prime coat is damaged with same primer as shop coat..
3. Treat bare and sandblasted or pickled clean metal with a metal treatment wash coat before priming.
4. Zinc-Coated: Wash with mineral spirits. Remove white deposit on weathered surfaces with soap and water, and rinse with clean water.

D. Masonry
1. Smooth surface by grinding, stoning or scraping. Clean free of efflorescence, dirt and dust, grease and oils.
2. Use abrasive blast-cleaning methods if recommended by the manufacturer.
3. Upon testing, if surfaces are sufficiently alkaline to cause paint to blister or burn, sponge surface with a zinc-sulphate solution consisting of 2 lbs. zinc-sulphate to one gallon of water. When solution is dry, brush off the crystals prior to coating.

E. Concrete
1. Smooth surfaces by grinding, stoning, or scraping. Clean free of efflorescence, dirt and dust, grease and oils.
2. Use abrasive blast-cleaning methods if recommended by the manufacturer.
3. Surfaces Which Are Highly Glazed or Have Traces of Form Oil: Treat with a preparation of acid detergent concentration and dilute muriatic acid. For this treatment, mix one part concentrated muriatic acid and 4 parts water, and then add one part of acid detergent. Remove the acid with clean water.
4. Stains from the Weathering of Corroded Metals: Remove with a solution of 2 ounces of sodium metasilicate in one gallon of water. Thoroughly wet stained areas on weathered surfaces with water before application of solution.

F. Gypsum Board
1. Before painting, allow joint treatment to dry completely. Clean surfaces of dirt and dust.

3.3 COATING APPLICATION

A. General
1. Apply coating in accordance with the paint manufacturer’s recommendations.
2. All spaces shall be broom cleaned before coating is started.
3. Surfaces to be coated shall be clean, dry, smooth and protected from dampness.
4. Make edges of coating adjoining other materials and colors, sharp and clean, without overlapping.
5. Allow each coat of paint to dry at least 24 hours before succeeding coat is applied, unless manufacturer’s printed directions recommend otherwise.

6. Coats, as specified under “HIGH PERFORMANCE COATING SCHEDULE”, are intended to cover surfaces perfectly. If surfaces are not adequately covered, as determined by the OWNER’S REPRESENTATIVE, apply further coats to achieve complete coverage of surfaces at no additional cost to OWNER.
7. Finished work shall be uniform, of approved color, and free from defective brushing, spraying or rolling, and clogging or excessive flooding.
8. Apply coatings to exposed surfaces, including areas visible when permanent or built-in fixtures, convector covers, grilles, covers for finned-tube radiation, and similar components are in place.
    a. Coat surfaces behind movable equipment and furniture the same as similar exposed surfaces. Before final installation, coat surfaces behind permanently fixed equipment or furniture with prime coat only.
    b. Coat back sides of access panels, removable or hinged covers, and similar hinged items to match exposed surfaces.

B. Mixing
1. Perform in accordance with directions of manufacturer.
2. Maintain containers used in mixing and applying coatings is a clean condition, free of foreign materials and residue.
3. Stir materials before applying to produce a mixture of uniform density. Stir as required during application. Do not stir surface film into the material. Remove film and, if necessary, strain coating material before using.

C. Small Cracks In Concrete and Masonry Surfaces
1. Before application of succeeding coats, fill with an approved spackling compound, small cracks, holes and other similar imperfections which show up in concrete, masonry and plaster surfaces after the primer-sealer has been applied to the surface.

D. Scheduling Coating: Apply first coat to surfaces that have been cleaned, pretreated, or otherwise prepared for coating as soon as practicable after preparation and before subsequent surface deterioration.
1. Omit primer on metal surfaces that have been shop primed and touchup painted.
2. Do not apply succeeding coats until previous coat has cured as recommended by manufacturer.
3. Where manufacturer's written instructions require sanding, sand between applications to produce a smooth, even surface.
4. Allow sufficient time between successive coats to permit proper drying. Do not recoat surfaces until coating has dried to where it feels firm, does not deform or feel sticky under moderate thumb pressure, and application of another coat does not cause undercoat to lift or lose adhesion.
5. If undercoats or other conditions show through final coat, apply additional coats until cured film has a uniform coating finish, color, and appearance. Give special attention to edges, corners, crevices, welds, exposed fasteners, and similar surfaces to ensure that they receive a dry film thickness equivalent to that of flat surfaces.

E. Application Procedures: Apply coatings by brush, roller, spray, or other applicators according to manufacturer's written instructions.
   1. Brush Application: Use brushes best suited for material applied and of appropriate size for the surface or item being coated.
      a. Apply primers and first coats by brush unless manufacturer's written instructions permit using roller or mechanical applicators.
      b. Brush out and work brush coats into surfaces in an even film.
      c. Eliminate cloudiness, spotting, holidays, laps, brush marks, runs, sags, ropiness, or other surface imperfections. Neatly draw glass lines and color breaks.
   2. Rollers: Use rollers of carpet, velvet back, or high-pile sheep's wool as recommended by manufacturer for the material and texture required.
   3. Spray Equipment: Use mechanical methods to apply coating if permitted by manufacturer's written instructions and governing regulations.
      a. Use spray equipment with orifice size recommended by manufacturer for material and texture required.
      b. Apply each coat to provide the equivalent hiding of brush-applied coats.
      c. Do not double back with spray equipment building-up film thickness of two coats in one pass, unless recommended by manufacturer.

F. Minimum Coating Thickness: Apply each material no thinner than manufacturer's recommended spreading rate. Provide total dry film thickness of the entire system as recommended by manufacturer.

G. Block Fillers: Apply block fillers to concrete masonry block at a rate to ensure complete coverage with pores filled.

H. Prime Coats: Before applying topcoats, apply a prime coat of material, as recommended by manufacturer, to material required to be coated or finished that has not been prime coated by others.
   1. Recoat primed and sealed substrates if there is evidence of suction spots or unsealed areas in first coat, to ensure a topcoat with no burn-through or other defects caused by insufficient sealing.

I. Protection
   1. Protect coating materials storage space from damage. Remove contaminated rags and waste from premises every day. Take all precautions to prevent fire, including spontaneous combustion.
   2. Before start of coating, remove finish hardware, accessories, plates and similar items in place, or provide ample protection of such items as approved by the OWNER’S REPRESENTATIVE. Do not remove UL labels on doors and frames.
   3. Remove doors, if necessary, to paint top and bottom edges.
   4. Upon completion of painting, reinstall removed items.
   5. Use only workmen skilled in the applicable building trade for removal and replacement of finished items.
   6. Protect adjacent construction by suitable covering or other method during progress of the work.

7. Close off the various spaces while painting, and exclude dust until the finish is dry. Post "Wet Paint" signs as required to protect newly finished spaces.
8. At completion of this work in a space, remove spots from floors, glass and other surfaces. Leave finished space clean and in acceptable condition.
9. At completion of work in area protected by fire protection system, remove the temporary covers on the fire protection sprinkler heads.

J. Final Touch-Up
1. At completion after all adjacent work has been completed, touch up and restore finish where damaged, and leave in specified condition.

3.4 COLORS

A. Colors shall be in accordance with color schedule furnished by the ARCHITECT-ENGINEER. No extras will be approved because of the color variety selected by the ARCHITECT-ENGINEER.

B. Coat surfaces in areas requiring alteration work to match color and sheen of respective existing finishes.

PART 4 HIGH PERFORMANCE COATING SCHEDULE

4.1 INCLUSIONS

A. Except for those items, surfaces and areas listed under "EXCLUSIONS", include in the work of this SECTION, the coating of all work that is customarily coated to provide a complete job, including mechanical and electrical work, whether or not each such item, surface or area is specifically shown or specified. Coat work that is not specifically shown or specified, same as similar work or, where no similarity exists, coat with a system directed by the OWNER'S REPRESENTATIVE.

B. Coat unpainted existing surfaces exposed by alteration and removal work where such surfaces will remain exposed in coated areas.

C. Prior to the application of coating, prepare the respective surfaces to receive paint per the requirements specified under "PREPARATION OF SURFACES".

4.2 EXCLUSIONS

A. Unless one or more of the following items, surfaces or areas are specifically included under a specified coating system to be painted, exclude from coating under this SECTION, the following:
1. Products having factory finish.
2. Face brick, paving brick and quarry tile.
3. Glazed surfaces of glazed concrete masonry and structural glazed facing tile.
4. Concrete floors with chemical hardener finish.

5. Finished floor, wall and ceiling materials, such as resilient flooring, carpeting, vinyl fabric wall covering, and acoustical ceilings.
6. Plastic laminate-covered surfaces.
7. Copper, stainless steel, brass, bronze and chromium-plated surfaces.
8. Aluminum.
9. Glass.
10. Glazing compound and sealants.
11. Roofing and non-ferrous flashing materials.
12. Sprayed fireproofing.
13. Concealed construction, such as wall surfaces and mechanical and electrical systems within suspended ceiling spaces, wall shafts, chases and furred spaces.
14. Nameplates and UL labels on doors and frames and equipment. Be responsible for ensuring that all nameplates and UL labels are not coated.
15. Gages, thermometers and other recording devices.
16. Moving parts of mechanical equipment, such as shafts, valve stems, etc.

4.3 HIGH-PERFORMANCE COATING SCHEDULE

A. Interior Surfaces:
   1. Concrete, Stucco, and Masonry (Other Than Concrete Masonry Units):
      a. First Coat: Primer formulated for moderate environment.
      b. Second Coat: Intermediate coat.
      c. Topcoat: Moderate-environment, semigloss epoxy.
   2. Concrete Masonry Units:
      a. First Coat: Block filler.
      b. Second Coat: Primer formulated for moderate environment.
      c. Third Coat: Intermediate coat.
      d. Topcoat: Moderate-environment, semigloss epoxy.
   3. Ferrous Metal:
      a. First Coat: Primer formulated for moderate environment.
      b. Second Coat: Intermediate coat.
      c. Topcoat: Moderate-environment, semigloss epoxy.

END OF SECTION

Revision History	
Date	**Rev. No.**
02-19-09	0

DO/djo [AR, ME]
P:__PROJECTS_SF07\sf070003.0001nsls ii ccwf expansion\SPC\09960.doc

THIS PAGE INTENTIONALLY LEFT BLANK

SECTION 10210

METAL LOUVERS

PART 1 GENERAL

1.1 SUMMARY

A. Scope
   1. Furnish and install all metal louvers in exterior walls, complete with accessories and incidental work, as shown and specified.

B. Related Work Specified In Other Sections
   1. Metal Siding and Trim Around Louvers In Metal Siding - DIVISION 7.
   2. Sealant Around Louver Perimeters - DIVISION 7.
   3. Ducts, Filters, and Dampers Behind Louvers - DIVISION 15.

1.2 SUBMITTALS

A. Furnish submittals for items that are identified in this SECTION by a different typeface and a bracketed code (e.g., *Item [L]*). Refer to Division 1, General Requirements for definition of codes for types of submittals and the administrative requirements governing submittal procedure. Additional submittal requirements pertaining to this SECTION are specified herein under this Article.

B. Submit manufacturer's product data only for proposed substitute louver units that are not specified.

C. Submit color samples only of proposed substitute louver colors that are not specified.

PART 2 PRODUCTS

2.1 MANUFACTURER AND TYPE

A. Drainable-Blade Mullion-Type Louvers
   1. Drainable-Blade Mullion-Type Louvers: Mullion-type, of welded extruded aluminum with 40-degree angle horizontal drainable-type blades spaced 4 inches on center, and with perimeter frame of profile shown. Provide units having 50 percent minimum free area.
   2. Provide four inch deep louver units:
      a. The Airolite Co. "K6774".
      b. Airline Products Co. "LSX4D45".
      c. Arrow United Industries "E-445".
      d. Construction Specialties, Inc. "A4097".
      e. Industrial Louvers Inc., "408".
      f. Ruskin "ELF375DX".

B. Accessories
   1. Bird Screens: Provide bird screens on interior side of all louver units.
   2. Insect Screens: Provide insect screens on interior side of louver units where noted.
   3. Blank-Off Panels: Provide panels on interior side of louver units over un-used areas, where noted.

2.2 FABRICATION

A. Extruded Aluminum Louver Units: Fabricate units of 6063-T5 extruded aluminum, minimum .081 inch thick, of welded construction.

B. Bird Screens: Provide 1/2 inch square mesh of .063 inch diameter aluminum wire, mounted in a folded aluminum frame.

C. Insect Screens: Provide 18 x 14 mesh aluminum insect screening mounted in a folded aluminum frame.

D. Blank-Off Panels: Fabricate of 2 inch thick urethane insulation core, with .032 inch thick aluminum face sheet each side, and .080 inch extruded aluminum frame.

2.3 FINISH

A. Louver Finish: Manufacturer's standard baked-on factory-applied 70 percent Kynar 500 or Hylar 5000 resin paint finish, minimum 1.0 mil thick (0.2 mil primer and 0.8 mil finish), in standard color to match color of metal siding panels unless scheduled otherwise.
   1. Also apply on blank-off panels, in standard color as selected.

PART 3 EXECUTION

3.1 INSTALLATION

A. Provide all necessary screws, bolts, nuts and other fasteners as required for a complete installation and install louver units in accordance with manufacturer's instructions and approved shop drawings.

B. Repair all damage to louvers or replace, and thoroughly clean of all dirt, grease, and other foreign matter.

C. Paint surfaces of steel in contact with aluminum, one coat of aluminum paint. Allow to dry thoroughly before installing aluminum louvers.

D. Mount bird screen behind interior face of louvers as detailed.

E. Mount insect screens behind interior face of louvers as detailed.

F. Install blank-off panels on interior face of louver units at all un-used (inactive) louver areas.

G. Ducts, filters, and dampers behind louver units are by mechanical trades.

END OF SECTION

Revision History	
Date	**Rev. No.**
A	0
B	0
C	0
D	0
E	0
F	0
02-19-09	0

DS/djo
C:\d\timsdatasf\brookhaven_national_laboratory\sf070003\200-projexec\280-spec\10210.doc

THIS PAGE INTENTIONALLY LEFT BLANK

SECTION 10440

BUILDING SIGNAGE

PART 1 GENERAL

1.1 SUMMARY

A. Extent of the signage and graphics is shown on the Drawings and in the Appendix. Building Signage to match existing site standards. Quantities of required signs shall be per scheduled in Message Schedule unless revised by Owner.

B. Symbols shall be as specified by the United States Department of Transportation (DOT) and the American with Disabilities Act (ADA).

C. Related Work In Other Sections
   1. Steel Supports for Signs; Metal Fabrications – Division 5.
   2. Concrete – Division 3.
   3. Column Numbering; Painting – Division 9.
   4. Electrical Wiring and Lighting; - Division 16.

1.2 SCOPE OF WORK

A. Sign Contractor shall provide and install new signs per design intent drawings; provide electrical hook-up to illuminated signs; engineer signs and sign foundations, and provide fastenings for attachment and installation all of signs; field verify dimensions and site conditions at sign locations.

B. Sign Contractor shall provide and install the following new sign types per design intent:
   1. Pedestrian and Vehicle Safety Aisle Marking.
   2. Regulatory.
   3. Informational.
   4. Direction (Wayfinding).
   5. Room Identification.
   6. Exterior Signage.
   7. Parking Area / Space Identification.
   8. Site Identification.

C. Installation of all work shall be completed according to deadlines determined by Owner's Representative.

D. Install materials, hardware, and structural supports and make necessary electrical connections. Installation shall include unloading, receiving and handling, storing, relocating, uncrating, inspecting, cleaning and assembly, testing and adjusting sign units into final locations.
   1. Coordinate with other trades as required to complete the Work.

E. The Sign Contractor shall engineer signs and provide fastenings for attachments of signs supplied by the Sign Contractor.

F. The Sign Contractor shall field verify dimensions and site conditions at sign locations supplied by the Sign Contractor.

G. The Sign Contractor shall furnish labor, materials, equipment and services necessary and reasonably incidental to the complete fabrication of signs as indicated as specified.

H. The Sign Contractor shall coordinate with Owner and other trades as required to complete the Work.

1.3 DESIGN INTENT

A. The contents of the APPENDICES are to illustrate design intent, font style, panel set-up, and nominal sizing of each sign type. It is the intent of the Sign Program to incorporate STANDARD product line signs for each type, except where noted.

1.4 QUALITY ASSURANCE

A. Use only personnel thoroughly skilled and experienced with the products and methods for fabrication of signage specified.

B. Uniformity of Manufacturer: For each sign type and graphic image process indicated furnish products of a single manufacturer.

C. Materials and workmanship shall be new and of the best grades of their kind for their specified purpose.

D. The term “or as approved” shall mean a material and/or method approved by the Architect-Engineer as equal to those named in specifications.

E. Contractors who wish to bid on a material or method assumed “equal” to those specified must submit a written request including supporting technical data with their bid. The Owner does not guarantee use of or consideration of any material or method not specified.

F. Sign units shall be engineered to be rigid, without buckling of any member, failure of any points, distortion or other damage. Joints shall be weathertight and vandal proof.

G. Joints in members shall be internally aligned and shall provide for thermal expansion and contraction. Exposed corners of frames shall be mitered and welded, with sharp 90-degree corners, unless otherwise specified. Joints and seams shall be filled and ground smooth so as not to be visible on the finished sign.

H. Welding shall conform to applicable AWS standard and shall be free of defects. Welding shall be done prior to finishing. Aluminum-to-aluminum joints on the exterior of a sign shall be continuous heli-arc welded and finished smooth.

I. Exterior signs shall be engineered to be rigid and withstand movement, shear and torsion loads. Exposed areas of sign shall not oilcan. Sign shall withstand windload of 30 psf without permanent malformation or damage.field measurements

1.5 ELECTRICAL WORK

A. Electrical work shall bear the label of Underwriters Laboratories, Inc. (UL) approval.

B. Manufacture shall provide required illumination and electrical connections. Electrical fixtures and assemblies shall meet UL requirements and be installed in accordance with NEC standards.

C. Coordinate with Division 16 Sections and Drawings.

1.6 FIELD MEASUREMENTS

A. Take field measurements where required to verify or supplement dimensions indicated and be responsible for accurate fit of the work.

1.7 UTILITIES AND SERVICES

A. Protect existing utilities and services within and adjacent to area of Work, from damage while performing the Work.

B. If utilities or services are uncovered that are not indicated on the Drawings, advise Owner and do not work in the immediate area until instructed by the Owner.

1.8 EARTHWORK

A. Backfill excavations as promptly as work permits.

B. Repair and re-establish grades where damaged during demolition and installation.

1.9 SUBMITTALS

A. Furnish submittals for items that are identified in this Section by a different typeface and a bracketed code (*e.g., Item [L]*). Refer to Division 1 - General Requirements, for definition of codes for types of submittals and the administrative requirements governing submittal procedure. General submittal requirements pertaining to this Section are specified herein under this Article.

B. *Drawings [D]*: Submit shop drawings for fabrication and installation of the signs. Include plans, elevations, and typical large-scale details of construction, sign working and lettering layout. Show anchorages and accessory items. Furnish location template drawings for items supported or anchored to permanent construction.

C. *Samples [S]*: : Submit samples/prototypes for verification of the following:
   1. Two samples of each specified sign color, paint and vinyls, for color verification, 4” x 4” min. size.
   2. Two samples of Casocryl Black’n White acrylic sheet, 4” x 4” min. size.
   3. Samples of metal finishes and colors.

D. Submit within 10 days following approvals a final schedule of fabrication and installation and total completion.

E. Submit two copies of maintenance and instructional information for use by the Owner. Information shall describe proper maintenance such as cleaning and touch-up; shall include guarantees, special warrantee sand replacement data.

F. All submittals shall be sent to the Architect-Engineer through the Owner’s Representative per Division 1 requirements.

G. *Sign Product [P]*: Submit product data for lamping/lighting fixtures.

1.10 WARRANTY

A. During the warranty period, the Contractor agrees to restore defective work to the standard of the Contract Documents without cost to the Owner, including materials and labor.

B. Lamps and light fixtures shall be warranted a minimum of one year from final approval against failure of operation. If a unit becomes defective within this time period it shall be replaced at no cost to Owner.

C. Joints in acrylic plastic construction shall be warranted for five years against failure or delamination.

D. Vinyl die-cut letters shall be warranted for five years against delamination from substrate.

E. Interior plaques signs shall be warranted for five years against discoloration and delamination.

F. All warranties shall begin on the date of the Owner’s final acceptance of the Work.

PART 2 PRODUCTS

2.1 SIGN CONTRACTOR SUPPLIED SIGN TYPES

A. Signs: Regulatory and Informational
   1. Signs are Aluminum Sheet stock with permanent applied screen graphics. Signs are mounted.

B. Signs: Room Identification (Wayfinding)
   1. Modular components including structural rail, removable copy inserts of painted ABS plastic and square profile aluminum locking end caps. Signs are mounted.

C. Signs: Pedestrian and Vehicle Safety Aisle Marking
   1. Epoxy coating field applied text, marking, and graphics.

2.2 SAFETY MARKING EPOXY COATING

A. Overall Thickness: 3.5 mils.

B. Finish Sheen: 80-100.

C. Percent Epoxy Solids by Volume: Minimum 38% (2% variable allowed).

D. Percent Epoxy Solids by Weight: Minimum 52% (2% variable allowed).

E. Acceptable Manufacturers:
   1. Pittsburg Paint, "Auaspon WB Waterborne High Performance Epoxy", 98-Series.
   2. Sherwin Williams, "Tile Clad HS Epoxy".

2.3 ADHESIVE VERY HIGH BOND TAPE

A. Double-coated high bond acrylic tape for joining of sign units, of thickness needed to achieve maximum adhesion with minimum visibility.

B. Acceptable manufacturers:
   1. Graphtec Industries
   2. 3M Co.
   3. Owner’s approved equivalent.

2.4 ALUMINUM

A. Aluminum Sheet: Provide aluminum sheet of alloy and temper recommended by the aluminum producer or finisher for the type of use and finish indicated, and with not less than the strength and durability properties specified in ASTM B 209 for 5005-H-15.

B. Aluminum Extrusions: Provide aluminum extrusions of alloy and temper recommended by the aluminum producer or finisher for the type of use and finish indicated, and with not less than the strength and durability properties specified in ASTM B 221 for 6063-T5.

C. Filler metal for welding aluminum shall be the alloy recommended for each application by the manufacturer of aluminum alloy.

D. Aluminum shall be separated from direct contact with concrete and metals other than stainless steel, zinc, cadmium or nickel bronze, by painting contact surfaces with zinc chromate primer

and aluminum paint or with a coat of heavy-bodied bituminous paint or by non-absorptive tape or gasket.

2.5 SIGN POSTS

A. Perforated steel support signposts 3-1/4 inch x 3-1/4 inch square. Factory finish all surfaces of pole gloss black.

2.6 ANCHORS AND FASTENERS

A. Anchors and Inserts: Use non-ferrous metal inserts for interior installations. Furnish inserts, as required, to be set into masonry work.

B. Fasteners: Unless otherwise indicated, use concealed fasteners fabricated from metals that are non-corrosive to either the sign material or the mounting surface.

C. Ceiling Suspension Cabling: Follow manufacturer recommendation.

2.7 PLASTICS

A. Cast Acrylic Sheet: Provide cast (not extruded or continuous cast) methyl methacrylate monomer plastic sheet, in sizes and thickness indicated, with a minimum allowable continuous service temperature of 176 degrees F (80 degrees C), and of the following types:

B. Transparent Sheet: Where sheet material is indicated as “clear” provide colorless sheet in matte finish, with light transmittance of 92%, when tested in accordance with the requirements of ASTM D 1003.

C. Acceptable Manufacturer (Transparent Sheets)
   1. Plexiglass (Rohm and Haas Co.).
   2. Lexan (General Electric Co.).

D. Opaque Plastic Sheet: ABS sheet, in thickness indicated, with lightly textured surface. Polyvinylchloride (PVC) sheet, expanded low-density closed cell material with smooth flat surfaces.

E. Acceptable Manufacturer (Opaque Sheet)
   1. Alucobond Technologies, Inc.
   2. Architect-Engineer approval equivalent.

2.8 VINYL FILM

A. Provide opaque non-reflective, vinyl film, 2-mil minimum thickness, with pressure sensitive adhesive backing, suitable for interior applications.

B. Legends shall securely adhere when subjected to any temperature within the range of minus 30 degrees F (-34 degrees C) to 200 degrees F (93 degrees C) and shall not crack, chip of peel voluntarily.

C. Shrinkage of letters shall not exceed 1/64 inch (0.4 MM) in any direction.

D. Acceptable Products Are
   1. 3M's "Scotchcal"
   2. Avery Dennison's "Fasson 1000 series Premium Vinyl.
   3. Architect-Engineer approval equivalent.

2.9 CONCRETE

A. Concrete work shall conform to applicable ACI codes and standards in conformance with the requirements of Section 03300.

B. Concrete work for sign foundations shall be 3000-psi mix, air entrained in conformance with the requirements of Section 03300. Concrete shall be vibrated during the pour to adequately distribute aggregate and eliminate air pockets or other surface imperfections. Exposed concrete shall be smooth finish, without form marks or discoloration. Exposed edges shall be even.

C. Metal reinforcement shall be steel bars or wire as engineered by the sign fabricator and as shown on the shop drawings.

D. Install inserts as required for anchorage of sign units and cast in conduit as indicated, in conformance with the requirements of Section 03300.

2.10 FABRICATION

A. The Work shall be shop fabricated.

B. Fastenings shall be concealed where possible. Exposed fastenings shall occur only where approved by the Architect-Engineer and shall be finished to match work.

C. Silk-screened images shall be executed with photo screens prepared from original art. No handcut screens will be accepted. Original art shall be defined as artwork that is a first generation reproduction of the specified art.

D. Touch-up of artwork for photographic enlargement, quality of artwork for finished signage shall be the responsibility of the Contractor. The Architect-Engineer reserves the right to reject artwork if it fails to meet the standards of quality established.

E. Edges and corners of finished letter forms and symbols shall be photographically precise, crisp, clean; tick marks, rounded corners, discontinuous curves, line wave, cut or ragged edges, edge build-up, bleeding, surface pinholes or other imperfections will not be accepted.

F. Letterforms and symbols shall be aligned to maintain a base line parallel to the sign format. Letterforms and symbols shall conform to the prescribed letter from proportions.

G. Message copy, unless otherwise specified, shall be **Helvetica Regular and Medium**, all caps as indicated. Alternate letterforms shall not be accepted. Message copy colors shall be as indicated on the drawings.

H. Message copy on drawings is for layout purposes. Actual copy for signs shall be as scheduled.

I. Fabrication of acrylic plastic sheet shall be in accordance with approved shop drawings and with techniques and recommendations of the manufacturer.

J. Remove protective paper from acrylic sheet only as required during fabrication. Exercise care in handling and fabrication to avoid scratching, chipping or crazing of the acrylic plastic sheet.

K. Panel Signs: Fabricate panel signs to comply with the requirements indicated for materials, thickness, finishes, colors, designs, shapes, sizes and details of construction. Produce smooth, even, level sign panel surfaces, constructed to remain flat under installed conditions within a tolerance of plus or minus 1/16 inch measured diagonally.

L. Brackets: Fabricate brackets and fittings for bracket-mounted signs from extruded aluminum to suit sign panel construction and mounting conditions indicated.

M. Graphic Image Process: Provide sign copy to comply with the requirements indicated for sizes, styles, spacing, content, positions, materials, finishes and colors of letters, numbers, symbols and other graphic devices.

N. Graphics shall be executed in such manner that edges and corners are true, clean and photographically precise. Graphics with rounded corners, cut or ragged edges or edge build-up will not be accepted.

O. Apply pressure-sensitive vinyl graphics to clean surface; surface and air temperature shall be 60 degrees F (16 degrees C) minimum.

P. Substrates shall be considered dirty and shall be wiped with a solvent recommended by the acrylic manufacturers prior to the application of vinyl film of sheeting. Dry the surface with a lint-free cloth before the solvent evaporates from the surface.

2.11 FINISHES

A. Metal Finishes: Comply with NAAMM “Metal Finishes Manual” for finish designations and applications recommendations.

B. Aluminum Finishes: Aluminum shall be pretreated as recommended by the paint manufacturer. Prime surfaces to be painted with paint manufacturer’s recommended primer.

C. Paints and inks shall be made of other surface material on which they are to be applied and as recommended by the manufacturer of the paint or ink. Identification of paint or ink shall be noted on shop drawings with method of application. Prime coats or other surface pre-treatments, where recommended, shall be included in the work. Coating shall be even over entire surface to be painted, without voids, runs, sags, brush or roller marks.

D. In general, paint application shall be by brush or airless spray. Paint applied by brush shall be free of objectionable brush marks and meet the approval of the Architect-Engineer.

E. Interior paint finishes shall be acrylic polyurethane, semi-gloss on aluminum substrates, matte finish on plastic substrates.

F. Acrylic Polyurethane finish shall be applied at the rate of 2.5 mils per coat by air or airless spray.

G. Acceptable Manufacturers Include
   1. Matthews Paint Co.
   2. Akzo Coatings Inc.
   3. Architect-Engineer approval equivalent.

H. Sign colors shall match approved samples and shall be exactly as specified. Sign colors shall be consistent in chroma and in value, shall maintain even opacity and be free of any imperfections.

2.12 SIGN GRAPHICS

A. The attached sketches, in the Appendices, show sign design, graphics, and locations.

B. Monument Identity Signs (MN)
   1. Aluminum framing and faces, painted, constructed to create frameless box with flat sign faces. Sign type is internally illuminated, with routed out graphics with translucent acrylic back up.
   2. Provide metal halide lamps, 277 Volt, for even illumination with no halation. Provide electrical shut-off switch inside sign box.
   3. Location and quantity as shown on Drawings included in Appendix

C. Pylon Directional Signs (P)
   1. Aluminum framing and faces, painted, constructed to create frameless box with flat sign faces.
   2. Sign type is non-illuminated, with applied vinyl graphics.
   3. Location and quantity as shown on Drawings included in Appendix

D. Directional Post and Panel Signs (DP)
   1. Aluminum extruded framing and removable panels, .090 min. sheet, painted. Aluminum extruded half-round profile posts, .125-inch thickness, painted, with extruded aluminum caps, and designed to accept panel-framing system on an integral track.
   2. Sign type is non-illuminated, with surface applied vinyl graphics.
   3. Location and quantity as shown on Drawings included in Appendix

E. Flagmount Signs (FM)
   1. Aluminum removable sign panels, .125-inch thickness, painted. Single aluminum post, round profile, slotted to accept sign panel, .125-inch thickness, painted, with extruded aluminum caps.
   2. Sign type is non-illuminated, with surface applied vinyl graphics.
   3. Location and quantity as shown on Civil Drawings not included in this package.

F. Regulatory Signs (R)
   1. Aluminum sign panels, .090 min. thickness, painted. Single aluminum post, half-round profile, with sign panel centered on post, fastened mechanically through sign panel, .125 inch thickness, painted, with extruded aluminum caps.
   2. Sign type is non-illuminated, with surface applied vinyl graphics. Stop symbol signs have reflective graphics.
   3. Location and quantity as shown on Civil Drawings not included in this package.

G. Light Pole Parking Area ID Signs
   1. Aluminum sign panels, .090 min. thickness, painted, mounted to aluminum light poles with mechanical fasteners. Surface applied vinyl graphics.
   2. Location and quantity as shown on Civil Drawings not included in this package.

PART 3 EXECUTION

3.1 INSTALLATION

A. Locate sign units and accessories where shown or scheduled, using mounting methods of the type described and in compliance with the manufacturer's instructions. Exact position of exterior directional signs shall be field located.

B. Install sign units level, plumb and at the height indicated, with sign surfaces free from distortion or other defects in appearance.

3.2 CLEANING AND PROTECTION

A. Keep the premises free of rubbish and debris caused by this work, and upon completion of the work leave the area included in the contract broom clean. Remove waste materials and debris from the site and dispose of at legal disposal area away from the site.

B. Provide adequate protections for sign units from damage to materials or finish due to handling, storage, assembly and installation, until acceptance from Owner.

C. In the event of damage, be responsible to immediately make repairs and replacements to the approval of the Architect-Engineer, at no cost to the Owner.

D. Use only those cleaning materials and methods recommended by manufacturers of surface materials to be cleaned.

E. At completion of installation, clean soiled sign surfaces in accordance with material manufacturer's instructions.

F. All installed sign units shall be free of tape, dirt, smudges and other foreign material.

END OF SECTION

Revision History	
Date	**Rev. No.**
A	0
B	0
C	0
D	0
E	0
F	0
02-19-09	0

DS/djo
C:\d\timsdatasf\brookhaven_national_laboratory\sf070003\200-projexec\280-spec\10440.doc

THIS PAGE INTENTIONALLY LEFT BLANK

SECTION 10500

METAL LOCKERS

PART 1 GENERAL

1.1 SUMMARY

A. Scope
   1. Furnish and install all metal lockers, and wood benches for locker rooms and shower rooms, complete with accessories and incidentals, as shown on the DRAWINGS and specified in this SECTION.

B. Related Work Specified In Other Sections
   1. Wood sleepers and furring - DIVISION 6.
   2. Toilet Room Accessories – DIVISION 10.

C. Design Criteria
   1. Metal lockers shall be fabricated in knocked-down construction for nominal assembly at the project site.
   2. Accessible metal lockers including hardware requirements and the location of shelves, hooks, and coat rods shall meet the requirements of ADAAG.

1.2 SUBMITTALS

A. Furnish submittals for items that are identified in this SECTION by a different typeface and a bracketed code (e.g., *Item [L]*). Refer to SECTION 01340 for definition of codes for types of submittals and the administrative requirements governing submittal procedure. Additional submittal requirements pertaining to this SECTION are specified herein under this Article.

B. Submit shop drawings to show construction details, anchorage methods, base, and gages of materials.

C. Submit manufacturer’s product data for the specific locker units proposed.

D. Submit color charts or samples for color selection and approval.

PART 2 PRODUCTS

2.1 METAL LOCKERS

A. Manufacturer And Type
   1. *Single-Tier Lockers [D,P,S]*: 12 inches wide x 15 inches deep x 72 inches high (without legs) (plus 6 inch legs), with standard louvered door, and with hat-shelf, coat rod, and hooks as standard with the manufacturer.
      a. Lyon Metal Products “Single-Tier Quiet Lockers”.
      b. Penco Products Inc. “Guardian Single-Tier Lockers”.
      c. Republic Storage Systems “Single-Tier Quiet Lockers”.

B. Materials
   1. Sheet Steel: Mild annealed, cold rolled ASTM A366 steel, free from buckles, scale and other surface imperfections, capable of taking a high-grade enamel finish.
   2. Nuts, Bolts and Fasteners: Galvanized, cadmium plated, chrome plated or otherwise metallically rustproofed steel.

C. Body
   1. Fabricate bodies from not less than 24 gage unperforated steel, flanged at all vertical connections, backs flanged on two sides and tops, bottoms and shelves flanged on four sides.

D. Doors And Frames
   1. Fabricate doors from not less than 16 gage steel, stretcher leveled, with vertical edges formed into channel shape and with top and bottom edges flanged back. Fabricate all doors with manufacturers standard louvered faces.
   2. Fabricate door frame from not less than 16 gage formed steel channels, with flanged edge to form door stop and welded at corners.

E. Sloping Tops
   1. Fabricate continuous sloping tops from minimum 20 gage steel with corner fillers and end closures for installation on standard flat-top lockers, and with finish to match the locker finish.

F. Hardware
   1. Hinges: Minimum 2 inches long, 0.050 inch thick steel, five knuckle, full loop type, three per compartment door for single-tier lockers and two per compartment door for other types of lockers, welded to frame and bolted to door. Provide nonremovable hinge pin.
   2. Locking Devices: Channel shaped steel, operating within the channel reinforcement of the door edge and engaging a latching lug assembly on the door frame at three points, opposite the door hinges. Provide prelocking type device so mechanism can be locked with door in the open position.
   3. Compartment Handles: Chrome plated, zinc casting, with fixed case and arranged for padlocking. Form handle with integral padlock strike.
      a. Handles shall comply with the guidelines of the Americans With Disabilities Act.

G. Equipment
   1. Coat Hooks and Rod: Cadmium plated steel and attached with not less than two bolts.
   2. Number Plates: Polished chrome, nickel or aluminum with bright background and etched black numerals not less than 3/8 inch high. Attach plates to doors with rivets. Numbering to be coordinated with OWNER requirements.

H. Miscellaneous
   1. Provide end finishing panels at exposed ends, scribing front fillers and all other miscellaneous trim required for a complete installation.
   2. Closed Metal Bases: Provide locker manufacturer's standard closed flush metal bases to fit between the 6 inch high locker legs at front and exposed ends of lockers, designed to close of the spaces between floor and bottom of lockers and finished to match the locker finish.
   3. Continuous Metal Bases: Provide locker manufacturer's standard 4 inch (6 inch) high Z-shape or channel-shape continuous metal bases to set legless lockers on at front and exposed ends of lockers, finished to match locker finish. Provide appropriate-height applied metal support legs on backs of lockers.

I. Finish
   1. All steel parts shall be given a rust inhibitive treatment and a heavy coat of baked-on enamel in standard color as selected.

PART 3 EXECUTION

3.1 LOCKER INSTALLATION

A. The installation of lockers and accessories shall conform to the locker manufacturer's instructions, approved shop drawings, and as herein specified. Secure lockers together and to adjacent construction.
   1. Install lockers on raised bases and bolt lockers to wood frame raised bases.

B. Install lockers with fronts and filler panels in flat plumb planes, verticals plumb and horizontals level.

C. Install sloping tops securely to locker body, and to adjacent wall surface, provide anchors and fasteners as required.

D. Adjust doors and latches to operate easily without binding. Verify that integral locking devices operate properly.

E. Clean interior and exposed exterior surfaces and polish stainless-steel and nonferrous-metal surfaces.

F. Wash and clean all exposed surfaces to remove all dirt, grime, dust, finger marks and defacements. Touch up all damaged paint surfaces to match adjacent surfaces.

END OF SECTION

Revision History	
Date	**Rev. No.**
A	0
B	0
C	0
D	0
E	0
F	0
02-19-09	0

DS/djo
C:\d\timsdatasf\brookhaven_national_laboratory\sf070003\200-projexec\280-spec\10500.doc

SECTION 10810

TOILET SPECIALTIES

PART 1 GENERAL

1.1 SUMMARY

A. Section Includes
   1. Each type of toilet accessory is generally indicated on Drawings.
   2. Some types of toilet accessories are specified herein but are not indicated on the Drawings.
   3. All toilet room accessories shall be in compliance with the Americans with Disabilities Act (ADA)-1990 effective January 26, 1992 "Accessibility Guidelines for Buildings and Facilities", current issue published by the U.S. Architectural & Barriers Compliance Board, Washington, D.C.

B. Related Work Specified In Other Sections
   1. Metal Toilet Partitions – Division 10.

1.2 PERFORMANCE REQUIREMENTS

A. Mounting Heights
   1. Mount toilet room accessories at the heights indicated on the Drawings; if not indicated or indicated incorrectly (not per Handicapped Codes), heights must conform to the Accessibility Codes of the state or municipality in which the project is located; Accessibility Codes shall govern in all cases.

B. Field Measurements
   1. Take measurements at the site as required to insure accurate installation and exchange information with others installing adjacent items so that all work will be coordinated. Verify all locations of accessories with the Owner before proceeding with the installation.

1.3 SUBMITTALS

A. Furnish submittals for items that are identified in this Section by a different typeface and a bracketed code (e.g., *Item [L]*). Refer to Division 1, General Requirements for definition of codes for types of submittals and the administrative requirements governing submittal procedure. Additional submittal requirements pertaining to this Section are specified herein under this Article.

B. Submit manufacturer's product data only for proposed substitute toilet room accessory units not specified. If manufacturer's catalogue is submitted, clearly identify the particular items proposed, including gages, finishes, and accessories for same.

1.4 DELIVERY, STORAGE AND HANDLING

A. Wrap, carton, and crate, as required, to provide physical and climatic protection during loading, shipping and job site storage and handling.

B. Deliver packaged materials to the project site in the manufacturer's original, unopened containers which bear intact, legible and visible labels that identify the manufacturer's name and brand name, the contents, grade and type.

C. Upon delivery, immediately inspect shipments to assure their compliance with the requirements of the CONTRACT DOCUMENTS and approved submittals, and that products are complete, undamaged and adequately protected. Immediately report damaged, missing, or defective items. Remove broken, damaged or unlabeled items from the site immediately.

D. Store products in accordance with manufacturer's instructions with seals and labels intact, legible, and visible. Store products in a manner to prevent to prevent damage, soiling, theft, deterioration and contamination. Marred surfaces, cracked, checked spilt or warped materials will be rejected. Store materials subject to damage by climatic conditions in weathertight enclosures. Maintain temperature and humidity within the ranges required or recommended by the manufacturer.

E. Repair or clean items that have been damaged or soiled that can be restored to an "as new" condition at not cost to the OWNER. The OWNER'S REPRESENTATIVE shall be the judge of the effectiveness of remedial measures. Additional time or expense required to secure replacements and to make repairs will not be considered by the OWNER'S REPRESENTATIVE to justify and extension in the CONTRACT time of completion or an increase in the CONTRACT amount.

PART 2 PRODUCTS

2.1 GENERAL

A. The items enumerated herein are mentioned by manufacturer’s name, catalog number, model number or similar identification. Such mention is made to establish the type, size, materials, performance, function and quality of the item required. Items by Bobrick Corp., American Specialties Inc., Bradley Corp., McKinney/Parker, or other manufacturers may be accepted if the design, materials, fabrication, construction methods and finish meet the criteria of the specified item.

B. Provide products of the same manufacturer for each type of accessory unit and for units exposed in the same areas, unless other combinations are acceptable to Owner’s Representative.

2.2 ANCHORAGE DEVICES

A. Provide all fasteners, anchorages, trim, inserts, back-up plates and other incidental parts as necessary to install the work plumb, level, and in a rigid and substantial manner. Where

back-up plates are secured to metal framing, securely weld back-up plates in place with continuous welds. Use concealed fasteners where possible. Where exposed fasteners are necessary, provide them in material and finish to match adjacent surfaces. Use non-removable or vandal proof type heads for all exposed fasteners. Drill holes and use suitable expansion anchors or shields for securing items to substrate.

2.3 PACKAGING AND FINISH

A. Box or wrap each item suitably to prevent damage to same, individually and with label identification designating the item and location of installation. Provide each item complete with fasteners, anchorages, trim, backplates and any other incidental parts as required for the type of substrate to which the item is to be secured.

B. Unless otherwise specified, provide all items in Type 302 or 304 alloy stainless steel with No. 4 satin finish. Match finish of all accessories in any one area or room.

2.4 MATERIALS

A. Stainless Steel: ANSI Type 302/304, with satin finish No. 4, 22 gage minimum, unless otherwise indicated.

B. Galvanized Steel Sheet: ASTM A 527, G60.

C. Chromium Plating: Nickel and chromium electro-deposited on base metal, ASTM B 456, Type SC2.

D. Mirror Glass: ASTM C1036, Type 1, Class 1, Quality Q2, 1/4 inch thick, with silver coating complying with FS DD-M411. Furnish fifteen year warranty against silver spoilage.

E. Galvanized Steel Mounting Devices: ASTM A 386, hot-dip galvanized after fabrication.

F. Fasteners: Screws, bolts, and other devices of the same material as the accessory unit or of galvanized steel where concealed.

2.5 FABRICATION

A. Stamped names or labels on exposed faces of toilet accessory units are not permitted, except where otherwise indicated; unobtrusive labels on surfaces not exposed to view are acceptable. Where locks are required for a particular type of toilet accessory, provide same keying throughout project. Furnish two keys for each lock.

B. Surface-Mounted Toilet Accessories: Except where otherwise indicated, fabricate units with tight seams and joints, exposed edges rolled. Hang fronts, doors and access panels with full length continuous stainless steel piano hinge. Provide concealed anchorage wherever possible.

2.6 TOILET PAPER HOLDER (TPH)

A. *Toilet Paper Holder [P]*: Surface mounted type, double-roll capacity, of aluminum casting with satin finish, without controlled delivery, to hold two standard core toilet tissue rolls up to 2000 sheets. Spindles shall be molded and extruded ABS and shall be equipped with retractable pin and concealed locking mechanism. Provide one unit for each water closet. Mount on toilet stall partition where partitions are used, otherwise on permanent walls.
   1. Bobrick "B-2740".
   2. American Specialties, Inc. "0264-1".
   3. Bradley "5241-50".
   4. McKinney/Parker "1031LCD"

2.7 SANITARY NAPKIN/TAMPON DISPENSER (SND)

A. *Sanitary Napkin/Tampon Dispenser [P]*: Large capacity surface mounted type with pull handle activator of 18-8, type 304 stainless steel with a satin finish on exposed surfaces. Fabricate door with full length piano hinge and two tumbler locks keyed alike and to other units. Provide two coin mechanisms to permit dispensing minimum 31 napkins and 22 tampons, for free, 10 cents, or 25 cents. Coin operations shall be as selected by the Owner. Provide in women's toilet rooms.
   1. Bobrick "B2800".
   2. American Specialties, Inc.
   3. Bradley.

2.8 SANITARY NAPKIN RECEPTACLE (SNR)

A. *Surface Mounted Sanitary Napkin Receptacle [P]*: Surface mounted type, with utility shelf, of stainless steel welded construction, with a satin finish on exposed surfaces, with tight fitting self-closing top cover and locking bottom panel with continuous stainless steel piano hinge. Provide one unit in each toilet stall of women's toilet rooms.
   1. Bobrick "B-271".
   2. American Specialties, Inc. "0852SH".
   3. Bradley "4791".
   4. McKinney/Parker "627".

2.9 COMBINATION PAPER TOWEL DISPENSER AND RECEPTACLE (PTD/R)

A. *Surface Mounted Combination Paper Tower Dispenser and Receptacle [P]*: Surface mounted type, type 304 stainless steel of welded construction, with a satin finish on exposed surfaces, designed for surface mounting and to dispense minimum 600 C-fold or 800 single or multi-fold paper towels as selected by the Owner without adjustment or use of adapters, and with a minimum 12 gallon capacity removable waste container. Provide in toilet rooms where indicated.
   1. Bobrick "B-3949".
   2. American Specialties, Inc. "0469SM".
   3. Bradley "234-11".
   4. McKinney/Parker "80294-1".

2.10 LIQUID SOAP DISPENSERS (SD)

A. *Deck Mounted Liquid Soap Dispenser [P]*: Deck-Mounted Type: Soap dispenser shall dispense synthetic detergents, viscous lotion soaps, antiseptic solutions and vegetable oil base liquid soaps. Piston and spout assembly shall be 300 Series stainless steel. Spout shall rotate 360deg without damage to valve mechanism. Cover shall lock to body with concealed locking mechanism opened only with special key provided. Piston, spout and supply tube assembly shall be removable from top for top filling and maintenance. Valve shall have ABS cylinder and Buna N O-ring seals and duckbills. Shank shall accommodate mounting thickness up to 4 inches. Translucent, unbreakable polyethylene container shall have a capacity of 32 fl. oz. Provide one unit for each lavatory in each toilet room, unless otherwise noted on Drawings.
   1. Bobrick “B-822”.
   2. Accessory Specialties, Inc. “0331”.
   3. Bradley “6302-68”.
   4. McKinney/Parker “391-7-4 W/16 oz. globe”

2.11 SHOWER AND BATH ACCESSORIES

A. *Recessed-Mounted Soap Dish (RSD) [P]*: Recessed-Mounted Soap Dish (RSD): Heavy duty type, constructed entirely of 18-8, type 304 stainless steel with satin finish. Soap dish and flange shall be drawn, one piece construction. Provide anchorage appropriate for wall construction indicated. Provide one unit for each shower where indicated.
   1. Bobrick “B438”.
   2. American Specialties, Inc. “0407”.
   3. Bradley “9401”.
   4. McKinney/Parker “1071-T”

B. *Robe Hook (RH) [P]*: Robe Hook (RH): Surface mounted, double hook, entirely constructed of type 304 satin-finish stainless steel. Flange shall be equipped with concealed, 16 gage mounting bracket which locks to concealed stainless steel wall plate with stainless steel set screw. Provide where indicated.
   1. Bobrick “B6727”.
   2. American Specialties, Inc. “7345-S”.
   3. Bradley “9124”.
   4. McKinney/Parker “1543”.

C. *Towel Pin (TP) [P]*: Towel Pin (TP): Surface mounted, entirely constructed of type 304 satin-finish stainless steel. Flange shall be equipped with concealed, 16 gage mounting bracket which locks to concealed stainless steel wall plate with stainless steel set screw. Provide where indicated.
   1. Bobrick “B6777”.
   2. American Specialties, Inc. “7301-S”.
   3. Bradley “9314”.
   4. McKinney/Parker “1545”.

D. *Shower Curtain Rod (CR) [P]*: Shower Curtain Rod (CR): Fabricate of 1 inch O.D., 20 gage type 304 stainless steel in satin finish. Provide flanges of 20 gage stainless steel, with concealed mounting. Provide one rod at each shower stall and/or shower vestibule, where indicated.
   1. Bobrick "B-6107".
   2. American Specialties, Inc. "1206 X Flanges 1209".
   3. Bradley "953".
   4. McKinney/Parker "267 X SS brackets".

E. *Vinyl Shower Curtain (SC) [P]*: Vinyl Shower Curtain (SC): Fabricate of .008 inch thick vinyl material with hemmed bottom and sides and nickel-plated brass grommets 6 inches on center, in standard color as selected, with No. 204-1 stainless steel curtain hooks. Provide one curtain at each shower stall and/or shower vestibule, where indicated.
   1. Bobrick "B-204-2" curtain and "204-1" hooks.
   2. American Specialties, Inc. "1200V".
   3. Bradley "9533".
   4. McKinney/Parker "269SC".

F. *Folding Shower Seat (FS) [P]*: Folding Shower Seat (FS): Fabricate of 1 inch type 304 stainless steel tubing with satin finish. Fabricate seat of 6 woodgrain phenolic slats 5/16 inch thick x 3 inch wide. Provide one in each handicapped shower stall, where indicated.
   1. Bobrick "B-5171 or B-5181".
   2. American Specialties, Inc. "8210-A".
   3. Bradley "9567".
   4. McKinney/Parker "274T".

2.12 MIRRORS WITHOUT SHELF (MIR)

A. *Mirrors Without Shelf [P]*: Provide frame of 18-8, type 304 heavy gage stainless steel, 3/4 inch x 3/4 inch angle with satin finish. One-piece roll-formed construction with continuous integral stiffener on all sides. Bevel design on edge of angle holds frame tightly against mirror. Corners of mirror frame are heliarc welded, ground and polished smooth. Provide 20 gage galvanized steel back, fastened to frame with concealed screws, is equipped with integral horizontal hanging brackets. Concealed Phillips-head locking screws securely fasten mirror to wall hangers. Provide mirror of No. 1 quality, 1/4 inch float/plate glass selected for silvering, electro-copper plated by the galvanic process, guaranteed 15 years against silver spoilage. All edges are protected by high impact plastic filler strips; back is protected by full-size shock-absorbing, water proof, non-abrasive 1/8 inch thick polyethylene padding. Provide where indicated.
   1. Bobrick "B-290".
   2. American Specialties, Inc. "0600A".
   3. Bradley "700".
   4. McKinney/Parker "150".

2.13 GRAB BARS (GB)

A. *Grab Bars [P]*: Grab bars of lengths and configurations shown, of 1-1/2 inch diameter satin finish stainless steel, with 1-1/2 inch wall clearance and concealed mounting. Mount all bars at heights shown. Provide at all accessible toilet stalls and shower locations.
   1. Bobrick “B-6206”.
   2. American Specialties, Inc. “3200 Series”.
   3. Bradley “812 Series”.
   4. McKinney/Parker “9604”.

2.14 TOILET SEAT COVER DISPENSER (TSCD)

A. *Toilet Seat Cover Dispenser [P]*: Recessed toilet seat cover dispenser shall be constructed of type 304 stainless steel, welded construction. Exposed surfaces shall have satin finish. Door with 9/16 inch 90deg return shall be equipped with full-length stainless steel piano hinge and tumbler lock keyed like other washroom accessories. Unit shall be capable of dispensing 500 single fold or half fold paper toilet seat covers. Provide where indicated.
   1. Bobrick “B-3013”.

2.15 JANITOR CLOSET SHELF WITH HOOK AND MOP STRIP (JC/SHM)

A. *Janitors Closet Shelf with Mop Strip [P]*: Surface mounted custodian’s utility shelf, with mop and broom holders and rags hooks, shall be constructed of type 302 stainless steel with satin finish. The shelf shall be 18 gauge stainless steel, with 2 inch return edges and front edge shall be hemmed. Mounting brackets, welded to shelf, shall be 16 gauge stainless steel with satin finish. Unit shall be 36 inch long, 8 inch deep, with 4 spring-loaded, rubber cam holders, 3 rag hooks. Provide one in each janitor closet where indicated.
   1. Bobrick “B224 x 36”.
   2. American Specialties, Inc. “1316”.
   3. Bradley “9984”.
   4. McKinney/Parker “224/232”.

2.16 JANITOR CLOSET SHELF (JCS)

A. *Janitor's Closet Shelf [P]*: Surface mounted stainless steel unit, 12 inches wide x length as shown. Fabricate entirely of type 302 stainless steel with satin finish. Shelf and mounting brackets shall be 18 gage stainless steel. Weld brackets to the shelf. Mount shelf to wall with appropriate fasteners. Provide in each janitor closet where indicated.
   1. Bobrick “B-2912”.
   2. American Specialties, Inc. “0692”.
   3. Bradley “7512”.
   4. McKinney/Parker “224S12”.

PART 3 EXECUTION

3.1 INSTALLATION

A. Install toilet accessory units in accordance with manufacturer's instructions, using fasteners which are appropriate to substrate and recommended by manufacturer of unit. Install units plumb and level, firmly anchored in locations and at heights indicated.

B. Install horizontal toilet stall grab bars at 33 inches above finish floor, and fastened securely to substrate to withstand a concentrated force of at least 250 pounds per ASTM F 446.

3.2 ADJUSTING AND CLEANING

A. Adjust toilet accessories for proper operation and verify that mechanisms function smoothly. Replace damaged or defective items. Remove temporary labels and protective coatings.

END OF SECTION

Revision History	
Date	**Rev. No.**
A	0
B	0
C	0
D	0
E	0
F	0
02-19-09	0

DS/djo
C:\d\timsdatasf\brookhaven_national_laboratory\sf070003\200-projexec\280-spec\10810.doc

SECTION 13125

PRE-ENGINEERED BUILDING

PART 1 GENERAL

1.1 SUMMARY

A. Section Includes: A complete, integrated set of metal building system manufacturer's standard mutually dependent components and assemblies that form a metal building system capable of withstanding structural and other loads thermal movement, and exposure to weather without failure or infiltration of water into building interior. Include primary and secondary framing, roof and wall panels and accessories complying with requirements indicated and specified. The building system shall be an addition to the existing building system. Existing building system, the main wind force resisting system as well as cladding, shall be reinforced as required to comply with specified building codes. A small Cooling Tower Building is located on the site and is also pre-engineered. Cooling Tower Building roofing, siding, doors, etc. shall match that of the main (expanded) building. Shop drawings of existing building frame designed by Nucor Building Systems will be available upon request.

1. Building Profile: As indicated on the Drawings, with clear spans and roof slopes indicated.
2. Structural steel framing of a solid-web beam and column type system, as follows:
   a. Single Span: Rigid frame with tapered or uniform depth rafters rigidly connected to tapered columns.
   b. Furnish anchor bolts to concrete trade for setting.
3. Roof construction, including:
   a. Standing-seam metal roofing with exposed blanket insulation, with 1/2 inch foot minimum slope or as indicated on the Drawings.
   b. Metal gutters and downspouts, metal fascias, and precast concrete splash blocks.
   c. Roof openings, curbs, vents, openings and flashings for roof penetrations, weathertight metal flashing and trim, roof opening steel framing, and roof equipment support framing.
4. Exterior wall construction, including:
   a. Metal siding with (exposed blanket insulation) (concealed blanket insulation with interior full-height metal liner panels), trim and flashing.
   b. Metal louvers.
   c. Exterior hollow metal doors and frames, including glass and finish hardware for same.
   d. Overhead coiling insulated steel doors, including steel frames, and motor-operators for same.
   e. Wall openings for doors, vents, fans, louvers, openings and flashings for wall penetrations, weathertight metal flashing and trim, and wall opening steel framing.
5. Sealant and calking for weathertightness.

B. Related work specified in other sections:
   1. Concrete foundations and floor slabs, receiving and setting of anchor bolts in concrete, and constructing non-shrink grout pads for column bases - Division 3.
   2. Interior masonry walls and partitions - Division 4.
   3. Field painting - Division 9.
   4. Mechanical and electrical services - Divisions 15 and 16.

C. Products Furnished But Not Installed
   1. Column anchor bolts, complete with setting plans and templates.

1.2 PERFORMANCE REQUIREMENTS

A. Manufacturer shall be a member of MBMA.

B. AISC Certification for Category MB: An AISC-Certified Manufacturer that designs and produces metal building systems and components in an AISC-Certified Facility.

C. Reference Standards
   1. Materials and workmanship are referenced to published standards (current issue at time of bidding unless otherwise noted) which are referred to by the following abbreviations:

AISC	American Institute of Steel Construction
AISI	American Iron and Steel Institute
ASTM	American Society for Testing and Materials
AWS	American Welding Society
DHI	Door and Hardware Institutute
FSS	Federal Specifications and Standards
SSPC	Steel Structures Painting Council
UL	Underwriters' Laboratories
MBMA	Metal Building Manufacturer's Association
SDI	Steel Deck Institute

   2. Structural mill sections and welded plate sections shall be designed in accordance with the AISC "Specifications for the Design, Fabrication and Erection of Structural Steel for Buildings", and cold-formed steel structural members shall be designed in accordance with AISI "Specifications for the Design of Cold-Formed Steel Structural Members".
   3. Roof and wall panels shall be designed in accordance with the AISI "Specifications for Design of Light Gage Cold-Formed Steel Structural Members".
   4. Welding shall be in accordance with the AWS "Structural Welding Code", D1.1 for steel and AWS D 1.3 for sheet steel.
   5. The application of loads, and the design of other components shall be as specified in the Metal Building Manufacturers Association's "Low Rise Building System Manual".
   6. The design of elements and components of the building shall also conform with the latest New York State Building Code, New York State existing building code and local building codes having jurisdiction, and the requirements of such building codes shall take precedence if they exceed the requirements of the specifications or referenced standards.

D. Erector Qualifications
   1. Erection of the pre-engineered building enclosure shall be performed by the manufacturer or by a firm franchised by, or certified by, the manufacturer.

E. Design Criteria and System Performance Requirements
   1. The building structure and enclosure shall be designed per the requirements of the New York State Building codes for new and existing construction, local codes, and the following minimum design loads.
   2. Vertical Roof and Frame Loads:
      a. Snow: 31.5 pounds per square foot.
         1) Design the roof area around the roof top units for additional loading due to snow drifting per the building code.
      b. Utilities:
         1) To Purlins: None.
         2) To Main Frame: None.
      c. Roof Top Units: None.
      d. Dead Load: Loads due to roofing, insulation, ballast, siding, and structural systems shall be added to the above loads.
   3. Horizontal Wind Loads:
      a. Basic Wind Speed: 120 miles per hour. (Maximum 3 second gust)
      b. Roof Wind-Uplift Resistance: Provide roof panel assemblies that meet requirements of UL 580 for Class I-120 uplift resistance.
   4. Seismic Loads: Loads based on Seismic factors indicated and forces anticipated per the applicable building code.
   5. Lateral Bracing: Shall meet the following requirements:
      a. The main frames shall resist the lateral forces in the direction of the framing without vertical cross bracing.
      b. Vertical cross bracing shall be used to resist the lateral forces perpendicular to the main frames. Vertical cross bracing is required in the locations shown on the Drawings.

F. Air Infiltration for Roof Panels: Provide roof panel assemblies with permanent resistance to air leakage through assembly of not more than 0.09 cfm/sq. ft. (0,45 L/s per sq. m) of fixed roof area when tested according to ASTAM E 1680 at a static-air pressure difference of 4 lbf/sq. ft. (192 Pa).

G. Reinforcement of existing building:
   1. Existing building shall be reinforced to comply with specified design loads, criteria in accordance with specified building code requirements.
   2. Shop drawings of existing construction will be available upon request.
   3. All details and dimensions shall be field verified to supplement shop drawing information, to analyze and develop reinforcement requirements.
   4. All designs and details shall be performed and certified by a design professional registered in the State of New York, and submitted for approval.

H. Testing Agency Qualifications: An independent testing agency, accepted to authorities having jurisdiction, qualified according to ASTM E 329 to conduct the testing indicated, as according to ASTM E 548.

1.3 SUBMITTALS

A. Furnish submittals for items that are identified in this Section by a different typeface and a bracketed code (e.g., *Item [L]*). Refer to Division 1, General Requirements for definition of codes, types of submittals and the administrative requirements governing submittal procedure. General submittal requirements pertaining to this Section are specified under this Article.

B. *Pre-Engineered Building Shop Drawings [D]*: Fully detailed and dimensioned drawings of the complete building, including results of analysis, designs and details of required reinforcement of existing building, showing data and information to clearly describe the design, loading criteria, materials, sizes, gages, finishes, construction, layout, anchoring, fasteners, connections, and jointing. Drawings shall be signed and sealed by a registered Professional Engineer licensed in the State of the project location.
   1. Provide reactions to the foundation for foundation engineering within two weeks of bid award.
   2. Provide details, supporting elements, flashings and closures of all system components including any required doors, windows, louvers, insulation, and accessories specified.

C. *Pre-Engineered Building and Components Product Data [D]*: For standard catalogue-type items; if catalogue is submitted, clearly indicate the particular material proposed.

D. *Siding, Roofing and Components Samples [S]*: Submit a sample12 inches by 12 inches to illustrate color and shop applied finish for each material such as metal siding, metal roofing, aluminum, glass, gutters, and other items requiring color selection and approval. Submit sample profiles of metal siding and metal roofing.

E. *Pre-Engineered Building Manufacturer's Certificate [C]*: The pre-engineered building manufacturer shall certify in writing that the building, and all components incorporated into the building, meet the requirements of the Contract Documents, including design criteria, materials, and finishes.

F. *Panel Finish Guarantee [G]:* 20 year written guarantee on metal wall and roof panels, agreeing to repair the finish or replace the panels that show deterioration of the factory-applied polyvinylidene fluoride finishes within the guarantee period. Finish deterioration includes, but is not necessarily limited to, color fade, chalking, blistering, cracking and peeling.

G. *Metal Roofing Weathertightness Guarantee [G]:* 20 year written guarantee on metal roofing, agreeing to replace or repair metal roofing that fails to remain weathertight within the guarantee period.

1.4 PREINSTALLATION CONFERENCE

A. Preinstallation Conference: Conduct conference at Project Site to comply and coordinate all requirements of the project. Review methods and procedures related to metal building systems including, but not limited to, the following:
   1. Inspect and discuss condition of foundations and other preparatory work performed by other trades.
   2. Review structural load limitations.
   3. Review and finalize construction schedule and verify availability of materials. Erector's personnel, equipment, and facilities needed to make progress and avoid delays.
   4. Review required testing, inspecting, and certifying procedures.
   5. Review weather and forecasted weather conditions and procedures for unfavorable conditions.

1.5 DELIVERY, STORAGE AND HANDLING

A. Wrap, carton, and crate, as required, to provide physical and climatic protection during loading, shipping and job site storage and handling.

B. Deliver packaged materials to the project site in the manufacturer's original, unopened containers which bear intact, legible and visible labels that identify the manufacturer's name and brand name, the contents, grade and type.

C. Upon delivery, immediately inspect shipments to assure their compliance with the requirements of the CONTRACT DOCUMENTS and approved submittals, and that products are complete, undamaged and adequately protected. Immediately report damaged, missing, or defective items. Remove broken, damaged or unlabeled items from the site immediately.

D. Store products in accordance with manufacturer's instructions with seals and labels intact, legible, and visible. Store products in a manner to prevent to prevent damage, soiling, theft, deterioration and contamination. Marred surfaces, cracked, checked spilt or warped materials will be rejected, Store materials subject to damage by climatic conditions in weathertight enclosures. Maintain temperature and humidity within the ranges required or recommended by the manufacturer.

E. Repair or clean items that have been damaged or soiled that can be restored to an "as new" condition at not cost to the OWNER. The OWNER'S REPRESENTATIVE shall be the judge of the effectiveness of remedial measures. Additional time or expense required to secure replacements and to make repairs will not be considered by the OWNER'S REPRESENTATIVE to justify and extension in the CONTRACT time of completion or an increase in the CONTRACT amount.

PART 2 PRODUCTS

2.1 ACCEPTABLE MANUFACTURERS

A. Pre-engineered metal building enclosure, modified as necessary to comply with the requirements shown on the Drawings and specified, shall be designed and manufactured by:
   1. Nucor Building Systems, Waterloo, Indiana, or other approved equal.
   2. American Buildings Company, Eufaula, AL.
   3. Butler Manufacturing Company, Kansas City, MO.
   4. Star Builidng Systems, Oklahoma City, OK.
   5. Steelox Building Systems, Mason, OH.
   6. Varco-Pruden Buildings, Memphis, TN.

2.2 MATERIALS

A. Steel Framing
   1. As indicated on the Drawings, with clear spans and roof slopes indicated. Provide steel framing as specified. Steel framing shall be given a shop applied coat of white colored rust-inhibitive metal primer as standard with the building manufacturer.
   2. *Building Frame [D]*:
      a. The pre-engineered structure shall be a rigid frame type, of columns and beams with roof slopes indicated.
      b. Space main (and interior) columns as indicated. Furnish anchor bolts for columns to concrete trade.
      c. Members of the main frame and columns shall be rolled or built-up steel members of minimum 3/16 inch thick steel.
   2. *Purlins and Roof Framing [D]*:
      a. The configuration, thickness, and spacing of the purlins shall be the building manufacturer's responsibility.
      b. Provide supplemental structural framing for roof openings and provide roof equipment support framing. Verify sizes with roof equipment manufacturers' approved certified shop drawings.
   3. *Girts and Wall Framing [D]*:
      a. Provide girts and wall framing as indicated and to support load specified. Locate girts in relation to columns as indicated. Provide sag rods as required.
      b. Provide supplemental structural framing for wall openings, including doors and louvers.
      c. Provide end wall framing of corner columns, end columns, and rake beams.
   4. *Lateral Bracing [D]*:
      a. Longitudinal vertical wall bracing shall meet the following requirements:
         1) Lateral force resisting system shall consist of concentric diagonal-braced frames or moment frames.
         2) Brace locations shall be as shown on the Drawings and or coordinated with required roof and wall openings

b. General Requirements:
   1) Bracing end connections shall be capable of transferring loads from structure to foundation in a direct manner. Eccentricities shall be avoided and shall be accounted for where they exist. Stiffeners shall be added where required so that buckling of column or beam webs perpendicular to the plane of the webs is avoided.
   2) There shall be a complete and continuous “collector and chord” system capable of delivering the code-specified lateral forces to the bracing systems. Collector and chord members shall be designed to resist axial tension and compression forces in combination with any other loads delivered simultaneously to these members.

5. Non-High-Strength Bolts, Nuts, and Washers: ASTM A 307, Grade A, (ASTM F568M, Property Class 4.6),l carbon-steel, hex-head bolts; carbon-steel nuts; and flat, unhardened steel washers.
   a. Finish: Plain, uncoated.
   b. Finish: Hot-dip zinc coating, ASTM A 153, Class C.
   c. Finish: Mechanically deposited zinc coating, ASTM B 695. Class 50.
6. High-Strength Bolts, Nuts, and Washers: ASTM A 325 (ASTM A 325M), Type 1, heavy hex steel structural bolts, heavy hex carbon-steel nuts, and hardened carbon-steel wahers.
   a. Finish: Plain, uncoated.
   b. Finish: Hot-dip zinc coating, ASTM A 153, Class C.
   c. Finish: Mechanically deposited zinc coating, ASTM B 695, Class 50.
7. Where future expansion is noted on Drawings, fabricated steel framing with holes and connections required for future framing.

B. Roof System
1. *Standing Seam Roof with Exposed Insulation [D,G,P,S]*: Standing seam roof shall consist of exposed blanket insulation, hidden clips and fasteners type anchorage, and interlocking standing seam type metal roof panels, to match existing building construction. Roof construction shall have an Underwriters Laboratories Class I-120 Uplift Classification. Provide written guarantee for specified warranty period that the roofing will remain weathertight and free of rupture, structural failure, and corrosion perforation.
   a. Fabricate roof panels of pre-painted minimum 24 gage G90 galvanized steel to form interlocking standing-seam panels, with female rib factory calked with sealant. Provide concealed clip system (with thermal block spacers) for securing panels in place. Concealed fasteners shall be galvanized. Exposed fasteners shall be of stainless steel with gasketed washers. Each roof panel shall be nominal 24 inches wide, with nominal 3 inch high double-locked standing seam.
   b. Roof insulation shall be exposed fiberglass blanket insulation meeting North American Insulation Manufacturers Association “NAIMA 202 Standard” and ASTM C991 Type 1, and having an “R” value of 19, with a white vinyl-scrim-foil vapor barrier facing laminated on exposed side.
   c. Shop apply on exterior metal surfaces a baked polyvinylidiene fluoride paint finish standard with the building manufacturer, in color to match the metal siding exterior sheet, and guaranteed in writing for specified warranty period against blistering, peeling, cracking, flaking, checking, chipping, excessive color change not to exceed 5

NBS units per ASTM D2244, and excessive chalking minimum 8 rating per ASTM D659.

d. New roof panels shall overlap and shall be attached to existing roof panels for a leak proof roofing system.

2. *Roof Flashing and Sealant [G,P]*: Provide metal flashings and sealant as required for a weathertight roof, as standard with the manufacturer. Provide flashings for roof openings and penetrations.
3. *Roof Curbs [D,P]*: Provide roof curbs indicated or as required, of metal as standard with the manufacturer. Verify actual curb sizes required with roof equipment manufacturer's approved certified shop drawings. Installed tops of curbs shall be level.
4. *Fascias, Gutters, Downspouts and Splash Blocks [D,G,S]*: Provide fascias, gutters, and downspouts, of galvanized steel with a shop applied baked polyvinylidene fluoride finish (guarantee same as for metal siding finish) in standard color as selected. Provide precast concrete splash blocks at discharge end of downspouts.

C. Metal Wall System

1. *Metal Wall System with Concealed Insulation [D,G,P,S]*: System shall consist of a fluted exterior metal wall panel, concealed fiberglass batt thermal insulation, and interior metal liner panel, to match existing building system.
   a. Fabricate exterior metal siding panels of minimum 26 gage pre-painted G90 galvanized steel, 36 inch wide panels, 1-1/2 inches deep, with overlapping edges, designed for installation with exposed fasteners. Provide one-piece full-height panels, without end joints. Exterior surfaces shall have a shop applied polyvinylidiene fluoride finish standard with the manufacturer, in standard color as selected, guaranteed in writing for specified warranty period against blistering, peeling, cracking, flaking, checking, chipping, excessive color change not to exceed 5 NBS units per ASTM D 2244, and excessive chalking minimum 8 rating per ASTM D 659.
      1) Where exposed fasteners are required, they shall be stainless steel or aluminum screws, bolts or rivets, with weather-seal washers; carbon steel shank fasteners with vinyl or stainless steel-capped heads shall also be acceptable.
   b. Provide unfaced fiberglass batt insulation between liner panel and exterior metal siding, to provide an "R" value of 13. Wall insulation shall meet North American Insulation Manufacturers Association "NAIMA 202 Standard" and ASTM C991, Type I.
   c. Fabricate interior metal liner panels of minimum 26 gage G90 galvanized steel sheet, 36 inch wide panels, 1-1/2 inches deep, with overlapping edges, designed for installation with exposed fasteners, equivalent to Butler Manufacturing Co., "Butlerib Liner Panel". Provide one-piece full-height panels, without end joints. Exposed interior surfaces shall have a baked-on white-color polyester paint finish.
      1) Use color-capped screw fasteners to secure liner panels to the girt system.
2. *Wall Flashing and Trim [D,G]*: Provide metal flashing and trim for exterior metal siding and interior metal liner panels (of same materials and finish as the panels) at top and bottom ends of panels, interior and exterior corners, at all wall openings and penetrations, etc., as required for appearance and weathertightness. Sealant calk joints where required to provide weathertightness.

3. Provide 4 inch deep minimum extruded aluminum, 45 degree angled fixed stormproof blade type blade louvers, with bird screen and finish to match metal siding. Louver shall be as manufactured by one the following approved manufacturers.
   a. The Airolite Co.
   b. Ruskin
4. Provide metal louvers in exterior walls where indicated, of same material and finish as exterior metal siding, with bird screen on interior side of louvers, as standard with the manufacturer.
5. Provide girts and supplemental framing and supports as required for metal siding support and load specified

D. Paint Finishes
1. *Liner Panel Baked Enamel Finish [S]:* Provide manufacturer's standard shop-applied baked enamel finish to exposed side of galvanized steel (wall) (roof) liner panels, and related metal trim and accessories for same. Apply a baked-on thermosetting acrylic/polyester resin minimum 1 mil thick (0.2 mil primer and 0.8 mil top coat) in white color per approved samples. Coating and primers shall be VOC compliant and within governing limitations of the project location.
2. *Siding and Roofing Polyvinylidene Fluoride Finish [S]*: Siding and Roofing Polyvinylidene Fluoride Finish: Provide on exterior surfaces of metal siding panels, metal roofing panels, exterior flashings and trim, gutters and downspouts and wall louvers, a 2-coat themocured system composed of a specially formulated inhibitive primer and a polyvinylidene fluoride color topcoat containing not less than 70% Kynar 500 or Hylar 5000 resin by weight with a total minimum dry film thickness of 1.0 mil (0.2 mil primer and 0.8 mil finish) in standard color per approved samples. Coating and primers shall be VOC compliant and within governing limitations of the project location.

E. Hollow Metal Doors And Frames
1. *Hollow Metal Doors and Frames [D,P]*: Provide pre-engineered building manufacturer's standard hollow metal pedestrian doors and frames where shown, of sizes indicated, complete with glass and finish hardware. Doors and frames shall meet the Steel Door Institute (SDI) standard for Grade II, Model No. 4 doors with polyurethane or rigid polystyrene core.
2. Provide 1-3/4 inch thick full-flush type heavy-duty steel doors, of minimum 18 gage G-60 galvanized steel, with foam insulation cores. Provide glazed lights in doors where scheduled, of sizes noted. Provide 1/4 inch thick clear tempered glass unless otherwise noted. Prepare and reinforce doors to receive finish hardware specified.
3. Provide minimum 16 gage G-60 galvanized steel door frames, constructed for non-hand installation. Provide sizes as required for doors. Prepare and reinforce frames to receive finish hardware specified.
4. Shop apply manufacturer's standard baked-on prime paint finish to exposed surfaces of doors and frames, suitable for receiving field-applied finish paint.
5. *Finish Hardware [D,P]*: Comply with ANSI A115. Finish hardware for exterior hollow metal doors shall be as follows:
   a. Reinforce to receive field-applied, surface-mounted finish hardware.

b. Locate finish hardware as indicated and in accordance with DHI's "Recommended Locations for Architectural Hardware for Standard Steel Doors and Frames".l

c. Provide hardware for each door leaf, as follows:

1) Hinges: 1-1/2 pair, steel, template hinges, 4-1/2 x 4-1/2 inches.
2) Lockset: Mortise type keyed to Owner's system.
3) Overhead door holder.
4) Threshold: Extruded aluminum (exterior doors only).
5) Weatherstrip Set: Head and side jambs.
6) Door Closer: Rectangular surface, top jamb mount type.

F. Overhead Coiling Steel Doors

1. *Overhead Coiling Steel Doors [D,P]*: Provide motor-operated overhead coiling insulated steel doors where shown, of sizes indicated, complete with motor operators, controls, pushbuttons, track, weather-stripping, etc. as required for complete installation and proper operation. Design door construction, including slat profile and gage, guides, windlocks, and other accessories, of sufficient rigidity to withstand a wind pressure of 20 pounds per square foot uniformly applied to either side. Overhead doors shall be as manufactured by one of the following acceptable manufacturers

a. Atlas Door Corporation.
b. The Cookson Company.
c. Cornell Iron Works, Inc.
d. Kinnear Division of Harsco Corporation.
e. Mahon Door Corporation.
f. Overhead Door Corporation.
g. J. G. Wilson Corporation.

2. Construct coiling door of galvanized interlocking steel slats of flat profile, with each slat enclosing a foam urethane core with a steel backing sheet, complete with integral slat lugs for windlocks. Provide clear safety glass lights in doors as indicated. Provide an electrical safety edge device in a tubular astragal on bottom of each door to stop downward travel of door and reverse direction to open position upon contact with any obstruction in the door opening. Provide weather-stripping on bottom, head, and jambs of doors.
3. Provide electric motor operators in NEMA 12 enclosures for each door. Provide all electrical components per National Electric Code and NEMA Standards. Provide a control panel for each door, containing a fusible disconnect switch, starter, control transformer, resistors, terminal blocks, and contacts (including for door heaters by others), mounted in a NEMA 12 enclosure. Provide electric pushbuttons on interior side at truck door. Provide wiring, conduit, and other electrical work required, starting at door control panels and connect up parts including, but not limited to, motor operators, pushbuttons, safety reversing device. Electric power to control panels is by the electrical trades.
4. Provide a shop applied prime paint finish on doors, suitable for receiving field-applied finish paint.
5. After installation, adjust and test-operate the doors in the presence of the Owner's Representative, until doors operate properly.

PART 3 EXECUTION

3.1 GENERAL

A. Work shall be coordinated with work of other trades so that construction work of all trades can be properly completed.

B. Erection of the pre-engineered building enclosure and associated work shall be by an authorized agent of the manufacturer. The erector shall follow the manufacturers published erection manual procedures and approved shop drawings. The erector shall touch-up the paint finishes which are damaged during the erection process.

C. Verify dimensions by making field measurements and be fully responsible for measurements, laying out of the work, accurate fitting together of the work and the accurate fitting of the work to the work of other trades.

D. Before proceeding with the erection and in time to permit correction of defective setting, verify the location and elevation of anchor bolts for accurate fit of column bases.

3.2 ERECTION

A. Field welding, burning or other field modifications or fabrication of structural members, will not be permitted unless approved by the Owner's Representative.

B. Set, shim and secure building columns at proper base plate elevation.

C. Install work sloped where indicated, otherwise install all work plumb, level, square, and true to line.

D. Anchor components securely in place. Provide for necessary thermal and structural movements.

E. Do not install any prefinished components which have defects, including damaged finish, dents, warps, and bends. Replace with new components at no additional cost to Owner.

F. Install flashings and sealant as required to provide a weathertight installation. The exterior envelope of the building shall be watertight; no water shall infiltrate into the building. Provide temporary covers over roof openings until permanent equipment is installed.

G. Adjust doors, finish hardware, and motor-operators for proper operation.

H. Clean exposed surfaces of the building promptly after erection is completed. Clean prefinished work per coating manufacturers's directions. Clean shop-primed surfaces to leave same acceptable for receiving field-applied finishes of others.

3.3 LOCATION AND TOLERANCES

A. Structural-Steel Erection Tolerances: Comply with erection tolerance limits of AISC S303, "Code of Standard Practice for Steel Buildings and Bridges".

B. Roof Panel Installation Tolerances: Shim and align units within installed tolerance of 1/4 inch in 20 feet (6 mm in 6 m) on slope and location lines as indicated and within 1/8-inch (3-mm) offset of adjoining faces and of alignment of matching profiles.

C. Wall Panel Installation Tolerances: Shim and align units within installed tolerance of 1/4 inch in 20 feet (6mm in 6 m) on level, plumb, and location lines as indicated and within 1/8-inch (3-mm) offset of adjoining faces and of alignment of matching profiles.

3.4 FIELD QUALITY CONTROL

A. Testing Agency: Owner will engage a qualified independent testing agency to perform field quality-control testing.

B. Extent and Testing Methodology: Testing and verification procedures will be required of high-strength bolted connections.
   1. Bolted connections will be visually inspected.
   2. High-strenght, field-bolted connections will be tested and verified according to procedures in RCSC's "Load and Resistance Factor Design Specification for Structural Joints Using ASTM A 325 or A 490 Bolts".
   3. Field-bolted connections will be tested and verified according to procedures in RCSC's "Load and Resistance Factor Design Specification for Structural Joints Using ASTM A 325 or A 490 Bolts".

C. Testing agency will report test results promptly and in wiring to Contractor and Architect.

3.5 FIELD PAINTING

A. After erection, structural framing shall have touch-up painting of areas damaged in handling, and of exposed unpainted surfaces such as bolts, nuts, washers, welds. Touch-up paint shall be same as shop paint. Welds and bolts shall be brushed clean prior to touch-up painting.

B. Touch up factory color finished surfaces with paint supplier’s recommended product.

END OF SECTION

Revision History	
Date	**Rev. No.**
A	0
B	0
C	0
D	0
E	0
F	0
02-19-09	0

DS/djo
C:\d\timsdatasf\BROOKHAVEN_NATIONAL_LABORATORY\SF070003\200-PROJEXEC\280-SPEC\13125.doc

THIS PAGE INTENTIONALLY LEFT BLANK

SECTION 13855

INSTRUMENTATION AND CONTROL SYSTEMS - GENERAL

PART 1 GENERAL

1.1 SUMMARY

A. Scope
1. Provide labor, materials and equipment to provide systems as specified in these 13800 Series sections of the specifications and as indicated on the DRAWINGS, including accessories as required for fully operational installations.
2. As part of this project, the contractor shall furnish flow meters, automatic control valves, temperature transmitters, pressure transmitters, pressure switches, pressure differential switches, level transmitter and level switches for the expansion of the Chilled Water/Compress Air Control System. The furnishing, mounting and wiring of the panels shall be under other sections.

B. Description Of System
1. Instrumentation and control systems shall be direct digital controller type as specified and indicated on the DRAWINGS.

C. Related Instrumentation And Control Work Specified In Other Sections
1. Instrumentation and Control Systems – Electrical Work – Section 13856.
2. Control Systems Equipment – Section 13865.
3. Automatic Control Valves – Section 13865A.
4. Flow Meters – Section 13865B.
5. Refrigerant Gas Detection System – Section 13870.
6. I&C Systems Start-Up and Final Acceptance Testing – Section 13875.

D. Equipment Furnished And Installed Under The Contract
1. Provide all required inter-connecting controls and instrument piping and wiring between field mounted instruments and controls, and all associated control and monitoring panels for proper operation of equipment.
2. All installation work provided shall be per the recommendations of the equipment manufacturers and as required by the manufacturers installation instructions and Shop Drawings.
3. Plan Drawings do not show environmental equipment, mounted devices, and independently mounted equipment. Determine the exact mounting requirements and coordinate device locations with work under the 15000 Series Sections.
4. Provide all required instrumentation and control equipment adjustments and calibration.
5. Coordinate installation scheduling of in-line piping and duct work devices to preclude the possibility of causing construction delays to other trades. Where required, initially furnish and install spool pieces to allow construction to proceed and install the in-line devices at a later date as scheduled. In all cases be responsible for all costs associated with the installation of any temporary devices.

E. Equipment Furnished Under Other Contracts
   1. Pressure taps and associated root valves are provided under other contracts. Be responsible for providing of impulse lines, instrument manifolds, and all connections to instrument and control devices provided under the Contract.
   2. Pipe taps for temperature sensors are provided under other contracts. Taps will be NPT with threaded watertight removable plug. Furnish and install all thermowells and conducting paste compatible with the instruments provided under this contract. Installation of thermowells shall be scheduled and coordinated with Consultant to allow for proper scheduling of Mechanical Work.
   3. Electrical power in the form of 120/460V 3 phase 4W service will be available at receptacle panels throughout the facilities. Spare 20A circuit breakers will be available at each panel for use under this Contract. Provide additional breakers when required. Breakers shall match the existing breakers within the panel.

1.2 SYSTEM SOURCE

A. Integrated Control Environmental, LLC.
   Pete Aiello
   Phone 718-672-8363 Ext. 201

1.3 QUALITY ASSURANCE

A. Referenced Standards
   1. All systems, devices etc. shall be per applicable provisions of the following:
      a. ANSI - American National Standards Institute, Inc.
      b. ASME - American Society of Mechanical Engineers
      c. ASTM - American Society for Testing & Materials
      d. ISA - Instrument Society of America
      e. NEC - National Electrical Code of NFPA
      f. NEMA - National Electrical Manufacturer's Association
      g. UL - Underwriters' Laboratories, Inc.

B. Requirements Of Regulatory Agencies
   1. Provide materials and equipment and execute the Work, including test and inspections, per applicable provisions of Federal, State and local Government laws and ordinances and referenced codes and standards. Governing laws, ordinances, codes, and standards constitute minimum mandatory requirements.

C. Source Quality Control
   1. Perform manufacturer's standard shop tests for each component to ensure compliance with intent of these Specifications.
   2. Materials and equipment shall be the products of manufacturers regularly engaged in the manufacture of such products, shall essentially duplicate equipment that has been in satisfactory service prior to issue date of the Contract and shall be supported by a service organization that is reasonably convenient to the site.

D. Contractor Qualifications
   1. The System Supplier shall have a successful history in the design and installation of control systems and shall evidence this history as condition of acceptance of bid.
   2. In addition, the System Supplier shall have an office which is staffed with factory trained engineers fully capable of providing instructions and routine emergency maintenance service on all system components, within 8 hours of notification.
   3. Installation of control components shall be by qualified control personnel. The requirements of "Qualified Control Personnel" shall be interpreted to mean personnel who specialize in control and instrumentation work.

E. Workplace Safety And Hazardous Materials
   1. Provide a safety program in compliance with the Contract Documents.
   2. The Contractor and its employees and subtrades comply with Federal, State and local safety regulations.
   3. The Contractor shall ensure that all subcontractors and employees have written safety programs in place that cover their scope of work, and that their employees receive the training required by the OSHA have jurisdiction for a least each topic listed in the Safety Certification Manual.
   4. Hazards created by the Contractor or its subcontractors shall be eliminated before any further work proceeds.
   5. Hazards observed but not created by the Contractor or its subcontractors shall be reported to either the Consultant or the Owner within the same day. The Contractor shall be required to avoid the hazard area until the hazard has been eliminated.
   6. The Contractor shall sign and date a safety certification form prior to any work being performed, stating that the Contractors' company is in full compliance with the Project safety requirements.
   7. The Contractor's safety program shall include written policy and arrangements for the handling, storage and management of all hazardous materials to be used in the work in compliance with the requirements of the AHJ at the Project site.
   8. The Contractor's employees and subcontractor's staff shall have received training as applicable in the use of hazardous materials and shall govern their actions accordingly.

1.4 SUBMITTALS

A. General
   1. Furnish submittals for items that are identified in this Section by a different typeface and a bracketed code . Refer to Section 01300 for definition of codes for types of submittals and the administrative requirements governing submittal procedure. Additional submittal requirements pertaining to this Section are specified herein under this Article.

B. Shop Drawings And Product Data
   1. For work that interfaces with work under other contracts or other trades, clearly illustrate and define the interfaces, including:
      a. System, subsystem and specific component interfaces.
      b. Specific signal levels, functions and actions.
      c. Normal and abnormal conditions.

d. Specific connections including terminal numbers.
e. Partial P & ID's as required to show the operational interface between systems.

2. Submit data sheets, catalog cuts, and technical information for all devices and equipment. Information shall include range, units, line size, ratings, power supply requirements, input and output signal descriptions, contact ratings, outline dimension drawings and internal schematic diagrams.
3. Provide control panel front view and interior drawings complete with outline dimensions and Bills of Material for all panel front and interior mounted equipment.
4. Provide P & ID's including indication of primary elements, controller functions and controlled elements. Utilize ISA standard S.5.1 and S.5.2 or Owner-approved alternate for development of P & ID's.
   a. In addition, include Bills of Material for all field equipment/devices and for local panel mounted equipment not provided under Paragraph .4 above. Instrument ranges, setpoints, etc., shall be indicated by each device.
5. Provide typical loop diagrams, logic diagrams, input/output drawings, etc., indicating format and information presentation for approval. The format shall be utilized on all diagrams and drawings submitted for record purposes.
6. Provide instrument installation details, and typical field conduit/wiring and field tubing drawings to indicate contractor's intent as to field installation of equipment.
7. Resubmit all reviewed shop drawings which have been modified subsequent to field release.
8. Submit flow calculations for each flow element.
9. Where control panel equipment is provided, include a separate bill of material for panel mounted controls and display instrumentation. The bill of material shall include all service descriptions and tag number, nomenclature engraving strips for identification of panel front mounted control devices or display instrumentation service legend.
10. Provide typical plan drawings showing the installation of wiring and conduits, cable trays, etc., and standard installation details to be used throughout the work.

C. Shop Drawings Submitted For Record
1. Provide, for record purposes only, complete instrumentation and controls documentation necessary for operating, maintaining and trouble-shooting of equipment/systems by the Owner.
2. Provide control panel drawings which show all main dimensions, materials of construction, interior equipment and sub-assembly mounting panels. Drawings shall include front and rear elevations and sections to fully describe the panels. Typical control panel drawings will not be acceptable. Provide nameplate engraving legends for all nameplates, both on panel face and panel interiors.
3. Provide complete interconnection diagrams showing internal wiring and piping connections between panel mounted components and field terminal boards within the panels.
4. Provide master instrument loop diagrams for each process or treatment area, illustrating the relationship between individual loops and the process or treatment equipment including distributed control systems according to the latest Instrument Society of America "Standards and Practices for Instrumentation" S5 Sections.
5. Provide individual loop drawings for each instrument loop. Loop diagram consists of the complete electronic connections between devices which comprise a control and or

monitoring function. (Example: Flow element to an electronic transmitter, to a controller, then to a control valve). Include all components as well as electrical and schematic diagrams for those loops requiring relay and control device logic external to the analog instruments. Provide a written sequence of operation fully describing loop function and operation, and identify all components and component electrical terminals on the loop diagrams. Loop drawings shall also show all software functions provided by a programmable controller, or computer.

6. Provide field wiring diagrams showing: all power supply connections; control wire connections to remote instruments and control devices; all wire connections to motor starters. Show all wire numbers and terminal designations including terminal designations used on motor control centers.
7. Provide ladder type schematic, or Owner-approved alternate diagrams and written operation sequences for all control equipment including all motors, dampers, solenoid valves, field sensing devices, etc. Typical diagrams will not be acceptable. Include specific wire and terminal number information for all devices.

D. Test Reports
1. Deliver copies of the system data required by the Contract Documents and as supplemented herein.
2. Test data shall include set points, calibrated ranges and tuning constants of control devices.
3. Provide typical detailed factory and field test procedures for formal approval at least 14 days before scheduled testing. Provide 4 copies of final test procedure to Construction Manager at least 5 days before the actual testing begins.

E. Operation And Maintenance Data
1. Provide per Section 01300 and as supplemented herein.
2. Provide loose leaf bound manuals and CDs which contain operating, maintenance and spare parts data for equipment provided under the 13800 Series Sections with the exception of typical commodities such as pipe and tubing.
3. Provide manuals which include:
   a. System components and assembly drawings as corrected or as-built.
   b. System “as-built” Drawings if not part of the equipment.
   c. Equipment brochures, data and catalog cuts showing: Performance; Installation; Operation; Maintenance and repair; Nearest authorized representative and stocking spare parts source; Recommended spare parts.
   d. Diagrams showing: Functional type; Control sequence; As-built control; As-built wiring.
4. Bind each copy of each set of manuals in three ring binders with piano hinge covers for convenience in handling. In binder table of contents, identify each item point of use. Set up manual format and content such that integration of manuals into system manuals prepared by others may be accomplished with minimal effort. Include names and phone numbers of equipment suppliers and subcontractors.
5. Incorporate in the manuals such data as drawings, flow diagrams, brochures and operating instructions in sufficient detail to enable operators to understand the facility, its potentialities, limitations and maintenance needs. Include data on design, construction,

installation and operating features required by regulation of Federal, State or Local governing authorities and the Insurance Underwriters, if required.

6. Assemble Operating and Maintenance Manuals for preliminary approval of content. Deliver one copy to the Consultant and one copy to Owner not less than 30 working days prior to scheduled operating and maintenance personnel training date and retain one copy for a "master". Upon approval of submittal, deliver within 5 working days, specified number of bound copies, excluding Owner's preliminary copy.

F. Maintenance Materials
   1. Provide list of spare parts required for one year's continuous operation including parts numbers and names and addresses of supply sources.

G. Posted Operating Instructions
   1. Prepare two sets of instructions for posting with each control panel. These instructions shall include such items as equipment, electrical and piping layouts, simplified narratives instruction and material necessary to aid in the operation of the equipment at the local control panels.

1.5 OPERATING AND MAINTENANCE PERSONNEL INSTRUCTIONS

A. Provide a coordinated training program encompassing equipment and systems for operating and maintenance personnel. Submit a training agenda for approval before any scheduled training.

B. Utilize corrected equipment and system shop drawings, manuals, demonstration apparatus and installed, functioning equipment.

C. During system commissioning and at time acceptable performance of the system hardware and software has been established, provide on-site operator and maintenance personnel instruction. Instruction shall be by acceptable competent representatives familiar with the systems and programmable controller hardware and accessories.

D. Provide training aids which include video tapes, slides, color layouts, transparencies and handouts, as well as the maintenance manuals. All materials shall become the property of the Owner. Training materials shall be site specific for the equipment and systems installed or interfaced under this Contract.

PART 2 PRODUCTS

2.1 SYSTEMS MATERIALS

A. Control And Instrumentation Copper Tubing
   1. Tubing (All Sizes) : Copper; ASTM B 280 No. 122.
   2. Fittings (All Sizes) : Solder type:
      .1 Mueller Brass "Streamline".
      .2 Nibco, Inc.
      .3 Chase Brass & Copper Co.

Compression type:
.1 Crawford “Swagelok”.
.2 Hoke “Gyrolock”.
.3 Parker-Hannifin “CPI”.

3. Pipe nipples — Red brass.
4. Solder — Tin-Antimony; ASTM B32, Alloy Grade 95TA.

B. Control And Instrument Plastic Tubing
1. Tubing (All Sizes) : Black virgin polyethylene, ASTM D 1248, Type 1, Class C, Grade 5; meeting stress crack test performance required by ASTM D 1693. Multi-tube harness material shall be as specified above with polyester film barrier and vinyl jacket not less than 0.062 inch thick. Tubing shall conform to all federal, state and local codes associated with flame and smoke retardation.
2. Fittings (All Sizes) : Compression type:
.1 Crawford “Swagelok KN”
.2 Hoke “Gyrolock”.
.3 Parker-Hannifin “Poly-Tite”.

C. Instrument Isolation Valves
1. Instrument Isolation Valve: Socket welding or butt welding gate or globe valves or a forged steel gate valve with socket/butt welding end on system side and threaded end on the instrument side.
   a. Vogt.
   b. Swagelok.Parker

D. Pressure Reducing Stations
1. Pressure reducing station: Provide complete with pressure reducing valve, particulate filter, valved bypass, valved pressure indicator upstream of station, valved pressure indicator downstream of station and regulated air pressure relief valve. Tamper resistant.
2. Pressure regulator shall be relieving type.
   a. Fisher Controls Co.
   b. Norgren.
   c. Wilkerson.
3. Filter shall remove one micron particles and be provided with manual drain cock and metal bowl guard if bowl is polycarbonate.
   a. Deltech.
   b. Norgren.
   c. Wilkerson.
4. Filter shall be approximately 99% efficient for dust particles of 0.5 microns and three microns and larger particles of lubricating oil.
   a. Deltech 810 Series.
   b. Norgren F44 Series.
   c. Wilkerson F Series Type A Element.

5. Pressure relief valve shall be sized for capacity of the low pressure side of the pressure regulator. Set valve for not more than 20% above the low side pressure. Rate and label per ASME Code. Seat material suitable for the service.
    a. Anderson Greenwood and Co.
    b. Consolidated.
    c. Teledyne-Farris.
6. Pressure indicators shall be two inch with scale selected for midpoint of operation.

E. Electrical Wiring
1. Provide electric wiring, cabling, devices and motor controls per requirements of Section 13856.

F. Calibration Fitting
1. Calibration fitting: Provide where indicated on the Drawings or at each instrumentation pressure connection, level transmitter, differential pressure transmitter and the like.
    a. Transamerica DeLaval, Minicheck coupling.
2. Three way or five way manifolds: Provide as required on all transmitters for zeroing and calibrating instruments without removing them.
    a. Anderson Greenwood and Co.
    b. ALCO Valve.
    c. HEX Valve.

G. Process Indicators
1. All field mounted transmitters or primary elements shall include a process indicator. The indicator shall be located to be easily read from the operating floor.
    a. Newport
    b. Red Lion
    c. Weschler

H. Impulse And Sensing Lines
1. Lines shall be of copper, stainless steel, etc., compatible with the process fluid. Design impulse lines to reduce temperatures to suit instrument capability.

I. Thermowells
1. Thermowells: Type 316 stainless steel or monel sized as required for the pipe or vessel. Provide non-solidifying heat conducting paste.

J. Transmitters - General
1. Transmitter failure position shall be to minimum or maximum as required by system safety.

2.2 CONTROL PANEL REQUIREMENTS

A. General
1. Control panels shall be NEMA 12 as indicated or as required by the environment in which the panel is mounted. Conduit, pipe, tubing shall be side or bottom entry and roof of panel shall be waterproof.

2. Control panels shall be sized as indicated or as required to provide a minimum of 25% spare usable space within the panel for panels less than 1500 sq. in. in size and 15% spare usable space for panels above 1500 sq. in. in size.
3. Control panel doors shall not be greater than 36 inches. Panels requiring a door greater than 36 inches in width shall use double doors. Control panels higher than 42 inches shall come equipped with legs if required and shall be suitable for floor mounting.
4. Panel doors shall come with key locked latch. When panel comes with more than one door, latching mechanism shall lock all doors. Provide four keys.
5. Control panels shall be laid out such that similar type equipment shall be grouped together, and barrier shall be installed between electrical and electronic equipment.
6. In those cases in which electronic equipment is mounted within the panel, interior ambient temperature shall not rise above 85% of manufacturers recommended maximum operating temperature. Provide filtered louvers/circulating fans when necessary to meet this criterion.
7. Terminate all wiring on terminal blocks and tag with wire numbers. When wire numbers are not indicated, develop an approved wire numbering system and utilize that system to identify and tag all wiring within the control panel.
8. Supply each control panel with a complete set of schematic and wiring diagrams associated with all the equipment within that panel. Typical drawings will not be acceptable.
9. Label control equipment mounted within the control enclosure with designations as indicated.
10. Terminate internal and incoming wiring, except plug terminated wiring, to the terminal blocks with a maximum of two wires on each side of the terminal.
11. 120 VAC control wiring within a control panel deriving its power from an outside source shall be yellow and DC power wiring shall be blue.

B. Electrical Control Components
1. Group electrical devices together.
2. Group devices mounted in the control panel carrying line voltage, except where line voltage is 10 V. or less, or a combination of line voltage and control voltage, above or to the side of devices which carry control voltage only.
3. Where control power is derived from the use of line voltage and associated control transformer, the control panel shall come complete with a flange mounted lockable disconnecting device.
4. Control relays, timers and contactors, where possible, shall be supplied by the same manufacturer.
5. All wiring within control panels shall be No. 14 AWG except wiring associated with electronic control equipment which shall be as specified under Electronic Control Components.
6. Where more than five electrical devices are utilized within a control enclosure, supply square duct for routing control wiring. Size duct as required but not less than 1-1/4 inches square.
7. Electrical equipment shall conform to requirements of governing codes and the referenced standards.

8. Terminate field wiring on terminals within the control enclosure. Tag terminals and field wires with wire numbers as indicate. When wire numbers are not indicated, develop a wire number system for approval.
9. Wire between panel mounted devices and door mounted devices through terminals. Wiring from terminal to door mounted devices shall be extra flexible wiring. Wiring shall be neatly tied and supported. Flexible connections bridging the cabinet and its door shall be neatly fastened along the hinge side and protected against abrasion.
10. Provide all enclosures with a suitable ground lug.
11. All pilot lights except those on graphic panels shall be Push-to-Test Transformer Type with 6-8 volt multi-LED lamps or use a common lamp test button.
12. Terminal blocks for control wiring shall be 300 volt rated suitable for tongue connectors.

C. Electronic Control Components
1. Group electronic equipment together within metallic barrier separation from electrical equipment with voltage 120 VAC or above.
2. Electronic signal cables except thermocouple (TC) wiring and resistance temperature detector (RTD) wiring shall terminate on terminals, with ground terminals provided for shielded cables as required.
3. Route thermocouple and resistance temperature detector (RTD) wiring directly to the receiving instrument, and in those cases where the wiring is run in close proximity to wiring carrying A.C. voltage provide protection from induced voltages with flexible metallic conduit or other approved means.
4. Connect ground terminals together to an isolated ground lug installed within the enclosure.
5. Wiring between terminal blocks and instruments shall be with No. 18 AWG tinned stranded copper.
6. Provide an insulated ground bus for connection of all instrument grounds. Connect the grounds direct to an isolated ground.
7. Provide fused 120 VAC outlet externally on cabinet.

PART 3 EXECUTION

3.1 CONTROL SYSTEM INSTALLATION

A. Control systems shall be complete in all details and shall include electrical wiring and necessary ancillary items to automatically maintain required preset conditions. Even though all items necessary to functioning systems are not specifically mentioned herein, provide and adjust them under this Contract.

B. Conform to the published or written instructions of the manufacturer for installation. Where instruction conflicts with the manufacturer's, notify the Owner or the Consultant.

C. Provide taps in instrument air lines including shut-off valves as required to route instrument air to equipment, PRV stations, etc. Exact location of taps shall be as required by field installation.

3.2 CONTROL AND INSTRUMENT AIR TUBING INSTALLATION

A. General

1. Conceal tubing except in areas where other piping is exposed. Arrange multiple tube runs neatly. Use bends rather than fittings for changes in direction.
2. Mechanically attach tubing to supporting surfaces. Do not use adhesives. See additional requirements under “Vibration Isolation”. Make tubing penetrations of concrete surfaces through minimum one inch IPS Schedule 40 steel sleeves. In the case of copper tubes routed through the steel sleeve, provide approved dielectric isolation between tubing and sleeve. Extend sleeve six inches above floors and one inch below bottom surface of slabs. Where water or vapor barrier sealing is required, provide 1/2 inch deep elastomer caulk to surfaces clean and free from oil and other deleterious substances.
3. Periodically purge tubing with dry, oil-free compressed air to rid system of impurities generated during joint making and installation. Also purge to remove atmospheric moisture before connecting to control instruments.

B. Copper

1. Cut tubing with mechanical joints square and remove burrs with approved cutting and reaming tools. Exercise care not to work-harden copper. In case of doubt, cut off or anneal tube ends by heating and air cooling per the manufacturer’s instruments.
2. Cut the tubing for solder joints square and remove burrs with approved cutting and reaming tools. Clean the inside surfaces of fittings and outside surfaces of tubes in joint areas before assembly of joint. Apply joint flux, filler material and heat source per manufacturer’s instructions to provide proper capillary action to fill the socket space and to achieve 100% of shear line strengthen capability. Valves in copper piping shall have screwed ends with end adaptors to suit mechanical connections, unless solder jointing is specified or indicated for a given application. Remake copper joints which fail pressure tests with new materials including pipe or tubing fittings, and filler metal.
3. Use hard drawn copper tubing in exposed areas and either hard drawn or annealed if concealed.
4. Fittings for supply system copper tubing shall be wrought copper solder joint-type except as connection to apparatus, where specified brass mechanical and IPS thread adapter fittings shall be used. Tool made bends in lieu of fittings are acceptable.
5. Horizontal support for less than three tubes shall be rigid 1 x 3/8 inch metal channel and proprietary metal tube race for three or more tubes.
6. Tubing runs embedded in concrete shall be annealed and routed in metallic conduit.

3.3 ELECTRICAL

A. General

1. Provide necessary conduits, fittings and wiring for the control systems. Include the low level instrumentation signal wiring such as thermocouple, RTD and other mV signals; high level signal wiring such as 4-20 mA, 0-135 OHM resistance signals, 120 VAC and DC control wiring. Provide all 120 VAC control wiring from local or remote control panels or control hardware, or motor starters. Specific examples of wiring to be installed include:
   a. Control transmitters to the control cabinet.

b. Hand/Auto control stations to the control cabinet.
c. Control cabinet to the final drive unit.
d. Status inputs (pressure, flow, temperature, limit switches or breaker auxiliary contacts) to the control cabinet.
e. Annunciators to the actuating contacts.
f. Recorders or indicators mounted on the panel to the source transmitter.
g. 120 VAC control wiring from the terminal blocks of the control panels to the motor starters.
h. 120 VAC control wiring from interlock switches (pressure, flow, temperature, limit switches or breaker auxiliary contracts) to motor starters.
i. 120 VAC control wiring from local start, stop, jog or lock-out pushbutton stations to motor starters.
j. 120 VAC control wiring inside motor starter and MCC's (only for motors which are controlled from equipment or panels supplied under this CONTRACT).
k. 120 VAC and 24 V power wiring from receptacle panels to all instruments and control panels unless otherwise indicated.
l. Ground leads from the control panel grounds to the ground mat system.

B. Wiring
1. Route RTD, 4-20 mA analog and low level D.C. signal wiring in conduits separate from all other wiring unless otherwise indicated. Wiring shall be minimum #18 shielded; 2,3 or 4 conductor as required. Where multi-conductor cables are used, use twisted pair cable with each pair shielded.
2. All 120 VAC and 24 V service to instruments, controllers, control panels, etc. provided under this CONTRACT shall be connected to power sources as indicated on the DRAWINGS.
3. All 120 VAC service to equipment shall include a ground wire sized per NEC for the load being served.
4. Splices in instrument signal cables, i.e. 4-20 ma DC, 1-10V DC, RTD, Thermocouple, etc. are not allowed. In those case where continuous runs are not possible, provide approved terminal cabinets. Mount cabinets no higher than 6'-0" above finished floor or platform.
5. Provide a minimum of 20% spare conductors (no less than 2) between main conduit runs. Roll up spares at each end within pull boxes or cabinets and label as spare, i.e., SP-1, SP-2, SP-3, etc.

C. Conduit And Fittings
1. Install conduits and fittings per requirements of Section 13856 and as supplemented herein.
2. Provide all required sealing materials and devices when penetrating fire rated walls and draft curtains. Submit installation details to Consultant for approval prior to proceeding with the Work.
3. Provide all required sealing materials and devices when penetrating roofs. Coordinate with Consultant and submit details for approval prior to proceeding with the Work.
4. Verify electrical construction requirements such as hazardous areas, corrosive areas, etc., and provide materials suitable for the area installed.

3.4 INSTRUMENTS AND COMPONENTS

A. Locate controls, relays, instruments, switches, valves, devices and accessories so they are readily accessible for adjustment, service and replacement or as indicated. Install and route tubing, sensing lines, cables, and conduits in parallel banks with changes of direction made at 90 degree angles.

B. Locate, size, and support temperature sensing elements in air streams to properly sense the representative flow or temperature. In the case of controlling, and transmitting elements, the sensing device shall be located, sized and of the type to sense the average condition. In case of safety elements, the sensing device shall be located and of the type to sense the extreme condition. Sensing elements in double wall casings and insulated ducts shall have the entire active portion within the air stream.

C. Install temperature sensing elements in fluid lines and vessels with Type 316 stainless steel or Monel thermowells filled with a nonsolidifying heat conducting paste. Locate sensing elements such that they are in the path of moving fluid and not positioned in stagnant, dead end or turbulent locations. Wells shall not obstruct the flow of the fluid being measured. Pipes one inch and smaller shall be increased at least one pipe size at point of insertion.

D. Locate pressure sensing taps on fluid lines in straight runs of pipe with a minimum length of five pipe diameters both upstream and downstream of pressure tap unless otherwise approved. Provide an isolation valve in sensing line at each pressure tap. Provide isolating seal where fluid can injure measuring element. Install pressure sensing elements in ducts and casings with clean sharp taps to accurately read true static pressure velocity and turbulence influences.

E. Where insulation is penetrated due to the installation of sensing elements or tubing, reseal the opening air and vapor tight. Where control devices are to be located on insulated surfaces, provide brackets to clear the finished surface of the insulation, avoiding punctures of the vapor seal.

F. Locate support, enclose, and install control devices and equipment such that they will not be subject to vibration, excessive temperatures, dirt, moisture or other harmful effects or conditions beyond their rated limitations. If devices must be located such as to be subjected to conditions beyond their recommended or rated limitations, provide the necessary protective enclosures or furnish the equipment constructed of materials and features capable of withstanding the adverse conditions. Controls and devices subject to wetting or to the weather shall have corrosion resistant weathertight enclosures. Where not specifically indicated on the DRAWINGS, instruments shall be located in easily accessible areas for periodic maintenance and calibration.

G. Provide necessary relays, switches, valves, brackets, linkages, control devices, auxiliaries, fasteners, accessories and connections to result in complete and operable control systems as specified herein and shown on the drawings.

H. Control valve and damper operators shall be capable of smoothly positioning under load through the full ranges and strokes indicated in both directions without binding or fluttering and

shall be further capable of holding steady in any intermediate or extreme position while the respective systems are functioning at design flows, temperatures, and pressures. When indicated, furnish valve and damper operators with an adjustable pilot positioning feedback relay mounted directly on each operator. Pilot positioner shall be capable of automatically making available the full operator power at any time in holding or repositioning. If indicated or specified, valve and damper operators shall be capable of being sequenced within the indicated ranges. Provide multiple operators on dampers where required to smoothly position damper under operating conditions.

I. Provide permanently attached stainless steel instrument tags for all field mounted devices. Imprint tag with instrument number and service conditions.

3.5 PRESSURE REDUCING STATIONS

A. Provide required pressure reducing stations for supplying instrument air at the pressure and in the quantities necessary for the equipment furnished plus indicated future requirements and for other equipment shown.

B. Provide each station with a pressure relief valve set at a maximum of 20% above downstream controlled pressure but in no case above the lowest limiting rating of any fitting, control or device downstream. Provide each regulator with 2-1/2 inch diameter gauges and shut-off valves both up and downstream. Each regulator shall have a globe valve bypass.

C. Logically group PRV station equipment and valves and surface-mount on a rigid panelboard with nameplates.

D. Size and select PRV stations by control system manufacture to deliver and regulate the required pressure and volumes from zero to maximum demand flows without surging, hunting or pressure variations.

3.6 VIBRATION ISOLATION

A. Vibration-isolate components either by location or by mounting devices.

B. Install tubing and conduit to preclude nullification of provisions for vibration isolation of equipment and ducting. Mount single tube runs in aircraft type clamps containing an elastomer insert. Mounting shall prevent contact with ducting and fan, casing or enclosure. Multiple runs shall conform to the same isolation requirements but details of mounting shall be submitted for approval. Provide looped rubber hose connection when tubing crosses flexible duct and equipment connectors.

3.7 FASTENING TO BUILDING STRUCTURES

A. The methods of attaching or fastening equipment or equipment support or hangers to the building structure shall be subject to approval by the Consultant. Submit shop drawings or samples for approval before processing with the WORK.

B. Drilling, welding or the use of explosive driven fasteners on building structures shall require written prior approval by the Consultant for each type of application except where indicated.

C. Equipment shall not be attached to or supported from the roof deck, from removable or knockout panels, or temporary walls or partitions.

D. Electrical equipment mounted against exterior masonry walls shall be mounted at least one inch away from the wall surface.

3.8 FIELD QUALITY CONTROL

A. After the inspection has been completed, check systems for continuity.

B. After completion of control and instrument piping and wiring, connect, test, adjust, and readjust as necessary, all control equipment in terms of design, function and performance, and otherwise make ready for systems acceptance tests.

C. After systems acceptance and after the systems have operated in normal service for two weeks, check the adjustment on instruments and devices and correct items found to be out of order. Readjustments necessary to accomplish the specified results shall be made for one year of operation upon request.

D. Test pneumatic systems per Tentative Recommended Practice RP 7.1 of the Instrument Society of America, “Pneumatic Control Circuit Pressure Test”. System pressure shall not exceed 30 PSI.

E. Provide equipment for the calibration of instruments provided under this CONTRACT and provided under other contracts which are connected to systems provided under this CONTRACT. Instruments not in calibration, shall be recalibrated to function as required, or shall be replaced, by the supplier of that instrument or device.

F. All instruments and control loops be calibrated and tuned for proper control action. Tuning shall consist of adjusting proportional, integral and derivative actions of controllers (hardware or software) to meet the accuracy of the environment or process indicated. Unless otherwise specified or indicated on the Drawings the following minimum requirements shall be met:
   1. Environmental:
      a. Temperature - +/-2.5 degF.
      b. Humidity - where humidity control is indicated on Drawings or specified - +/- 10% RH
   2. Process:
      a. Temperature - +/-1 degF of set point.
      b. Flow - +/-1% of set point.
      c. Pressure - +/-1% of set point.
      d. pH - +/-0.5 pH of set point.

G. Calibrate and adjust control devices, linkages, accessories, and components for stable and accurate operation to meet the design intent and to obtain optimum performance from the

equipment controlled. Final adjustment, calibration and checking shall be performed while the respective controlled systems are in full operation. Cause every device to automatically function as intended to insure its proper operation.

H. After calibration, adjustment, and checking have been completed and systems are operational, demonstrate to the Administrative Authorities having jurisdiction and to the Owner the complete and correct functioning of all control systems and equipment. These demonstrations shall consist of operating the controls through their normal full ranges and sequences. Simulate abnormal conditions to demonstrate proper functioning of safety devices. Readjust settings to their correct design values and after sufficient time, observe ability of controls to establish the desired conditions, noting abnormal deviations. Make necessary repairs, replacements or adjustments on items which fail to perform satisfactorily and repeat tests to demonstrate compliance with the design intent.

END OF SECTION

Revision History	
Date	**Rev. No.**
A	0
B	0
C	0
D	0
E	0
F	0
02-19-09	0

AWW/djo
C:\D\TIMSDATASF\BROOKHAVEN_NATIONAL_LABORATORY\SF070003\200-PROJEXEC\280-SPEC\13855.DOC

SECTION 13856

INSTRUMENTATION AND CONTROL SYSTEMS – ELECTRICAL WORK

PART 1 GENERAL

1.1 SUMMARY

A. Description Of Systems
   1. Control Power System: 120 volts, 2 phase, 60 hertz and 24 V DC.
   2. Furnish all labor, materials, equipment, technical supervision, and incidental services required to complete, test and leave ready for operation the electrical systems as specified in the 13800 Series Sections or as indicated.

B. Related Work Specified In Other Sections Or Packages
   1. Operating tests on mechanical and electrical equipment installed under other Sections to prove capability of such equipment to perform as specified in the Section covering specific equipment.

1.2 RELATED WORK SPECIFIED UNDER OTHER SECTIONS

A. Instrumentation and Control System – General – Section 13855.

B. Control Systems Equipment – Section 13865.

C. Automatic Control Valves – Section 13865 App A.

D. Flow Meters – Section 13865 App B.

E. I&C Systems Start-Up and Final Acceptance Testing Section 13875.

1.3 QUALITY ASSURANCE

A. Source Quality Control
   1. Furnish equipment and materials listed in the current, latest issue having a date prior to issue date of Specifications, of Equipment Publications and Underwriters' Laboratories, Inc., and bearing the UL Label whenever standards have been established and label service is regularly furnished. Furnish equipment and materials conforming to electrical standards requirements and the requirements of the contract documents.

B. Field Quality Control
   1. Install equipment and material in compliance with the regulations of Local, State and Governmental laws governing electrical installation, the latest edition of the electrical standards requirements and the requirements of the Contract Documents.

1.4 SUBMITTALS

A. Furnish submittals per Section 01300 and as supplemented herein. Include complete data on each item. Coordinate the items as they relate to the Work prior to submittal.

B. Submit a Letter of Compliance for all items listed under Part 2.

C. Test Reports: Submit, including complete data on actual readings taken and corrected values, to the Consultant for approval after each test period. Have all test reports signed by the authorized witnesses present at tests prior to submission. Do not energize any equipment or material for operating tests until test data has been approved.

1.5 RECORD DOCUMENTS

A. Submit three copies of final approved test reports to Consultant at the completion of the Work, per requirements of Section 01300.

PART 2 PRODUCTS

2.1 MATERIALS

A. Conduit
   1. As specified in Division 16 specifications.

B. Conduit Fittings
   1. As specified in Division 16 specifications.

C. Outlet Boxes
   1. As specified in Division 16 specifications.

D. Pull And Junction Boxes
   1. As specified in Section Division 16 specifications.

E. Conduit Boxes For Hazardous Areas
   1. As specified in Division 16 specifications.

F. Wireways
   1. As specified in Division 16 specifications.

G. Cable Tray
   1. As specified in Division 16 specifications.

H. Miscellaneous
   1. As specified in Division 16 specifications.

I. Fuses
   1. Fuses in General: One-time high interrupting capacity, UL Class RK5 dual element type.
      a. Bussmann “Fusetron”
      b. Gould-Shawmut “Trionic”
      c. Littelfuse

J. Wire And Cable
   1. As specified in Section 16050, Part 2, and as modified and supplemented herein.
   2. Wire for General Interior and Exterior Use: Stranded conductor, annealed copper, NEC Type THWN/THHN rated 75 degC, 600 volts, for conductor sizes No. 14 AWG and larger.
   3. Multi-Conductor Instrumentation Cables: Copper, not less than No. 18 AWG. Cables shall be twisted with 100% shield and drain wire. If multiconductor cables are proposed, provide twisted pairs, each with shield and drain wire with minimum 10% spares.
      a. Belden
      b. Alpha
      c. Carol (General Cable)
   4. Terminate shields at I/O card and tape field end, except as specified by equipment manufacturer.
   5. ControlNet co-axial cable Allen Bradley ControlNet, Beldon 3093A Type RG-6/U suited to cable length.

K. Connectors For Splicing Copper Conductors
   1. Connectors for Straight Splicing Conductors Up To and Including No. 8 AWG: Solderless compression type.
      a. Wago
   2. ControlNet connectors Allen Bradley 1786-BNC/B.

L. Lugs For Terminating Copper Conductors
   1. Lugs for Terminating Control Wiring: Solderless compression type with tinned tongue connector.
      a. Burndy “Hydent”
      b. Thomas & Betts “Sta-Kon”
      c. Wago
   2. Lugs for terminating Power Conductors up to and including No. 8 AWG: Solderless type, manufacturer’s standard unless otherwise specified.

M. Wire Labels
   1. As specified in Division 16 specifications.

N. Insulating Tape
   1. As specified in Division 16 specifications.

O. Miscellaneous
   1. As specified in Division 16 specifications.

P. Control Devices
   1. Push Buttons and Selector Switches: Heavy duty, NEMA 13 and NEMA 4 type, with contacts rated 10 amperes continuous, 600 volts AC, with legend plate operation and color as indicated.
      a. Allen-Bradley Bulletin 800T (NEMA 13), 800H (NEMA 4)
      b. Square D Class 9001, Type K (NEMA 13), 9001, Type SK (NEMA 4)
      c. Cutler Hammer Eaton HT800
   2. Indicating Lights: Heavy duty, NEMA 13 and NEMA 4 type with LED bulb, integral 120-transformer, push-to-test feature, color cap and legend plate as indicated.
      a. Allen-Bradley Bulletin 800T (NEMA 13), 800H (NEMA 4)
      b. Square D Class 9001, Type K (NEMA13), 9001, Type SK (NEMA 4)
      c. Cutler Hammer
   3. Control Relays: Heavy duty industrial type with convertible contacts rated 10 amperes continuous, 600 volts AC. Provide coils for operation on 120 volts AC unless other requirements are indicated. Provide number and type of contacts as indicated. Provide with power indication Flag & Light.
      a. Allen-Bradley Bulletin 700, Type P.
      b. Square D Class 8501, Type X
      c. Cutler Hammer
   4. Enclosures: As indicated in Section 13855.
   5. Limit Switches: Oil-tight type with operator to provide required function.
      a. Allen-Bradley
      b. Square D
      c. General Electric
   6. Control Transformers: 480/120 volt, size as indicated, complete with fuses. Open type or in NEMA 1 enclosure as required.
      a. Allen-Bradley
      b. Square D
      c. Cutler Hammer
   7. Isolating Transformers: 120/120V, size as indicated, complete with fuses. Open type or in NEMA 1 enclosure as required.
      a. Sola
      b. Allen Bradley
      c. Cutler Hammer
   8. Terminal Blocks: 300 volt class terminals with wire clamps.
      a. Allen Bradley Bulletin 1492
      b. Square D Class 9080
      c. Weidmuller

Q. Grounding Conductors
   1. Insulated Grounding Conductors: As specified in Division 16 specifications.

R. Grounding Connections
   1. As specified in Division 16 specifications.

S. Receptacles
   1. 20 Ampere Duplex Convenience Receptacle, with ground fault circuit interrupter for 120V, single phase service, straight blade, 2 pole, 3 wire, NEMA configuration 5-20R rated 20A 125V, NEMA performance standard, specification grade for back and side wiring, brown color.
      a. Arrow Hart GF5342
      b. Byrant GFR53FT
      c. Hubble GF-5362

T. Horn
   1. Signal Horn: 24 V DC, producing minimum sound intensity level of 90 dB at 10 feet.
      a. Federal Signal Corp.
      b. Edwards
      c. Allen Bradley

U. Beacon
   1. 24 V DC, strobe, 15 J energy, 1 Hz, 40,000 hours MTBF.
      a. Federal Signal
      b. Edwards
      c. Allen-Bradley

PART 3 EXECUTION

3.1 CONDUIT AND WIREWAY INSTALLATION

A. Conduit Systems
   1. As specified in Division 16 specifications and as supplemented herein.
   2. Identify conduits by color bands or character labels at intervals not greater than 130 feet and at each outlet or termination into equipment as follows.
   3. 208 Volt Systems - 2 bands (color to be determined by Owner)
   4. 120 Volt Systems - 1 band (color to be determined by Owner)
   5. Identify cable trays by character labels at intervals not greater than 130 feet and at equipment terminations in accordance with the class designation for service.
   6. Conduit and fittings between field mounted equipment and wall or building mounted pull boxes shall be rigid. Home runs between local pull boxes, wall mounted panels and/or pull boxes may be EMT conduit 10’-0” Above Finished Floor.

B. Outlet, Switch, Junction And Pull Boxes
   1. As specified in Division 16 specifications.

C. Wireways
   1. As specified in Division 16 specifications.

D. Cable Trays
   1. As specified in Division 16 specifications.

3.2 WIRE AND CABLE INSTALLATION

A. General
   1. Install as specified in Division 16 specifications and as supplemented herein.
   2. Splicing of instrumentation cable is not allowed. Where required because of length of runs, use approved terminal cabinets. Mount cabinets no higher then 6'-0" above finished floor or platform.
   3. Route RTD, 4-20 mA analog and low level D.C. signal wiring in conduits separate from all other wiring unless otherwise indicated. Wiring shall be minimum No. 18 AWG shielded; 2, 3 or 4 conductor as required. Where multi-conductor cables are used, use twisted pair cable with each pair shielded.
   4. Provide a minimum of 20% spare conductors (no less than 2) between main conduit runs. Roll up spares at each end within pull boxes or cabinets and label as spare, i.e., SP-1, SP-2, SP-3, etc.
   5. All 120 VAC service to equipment shall include a ground wire sized per NEC for the load being served.

B. Color Coding And Conductor Identification
   1. 120 VAC control wiring within a control panel deriving its power from an outside source shall be yellow and DC power wiring shall be blue.
   2. Identify individual phase conductors of branch power as to phase and system voltage by means of color coding. Color scheme for each different voltage system shall be as directed by the Consultant. Provide conductor color coding by means of colored insulating materials or by means of colored wire labels attached to individual conductors in all outlet, pull or junction boxes and at all terminations.
   3. Identify each control circuit wire at each termination by means of wire labels. Provide identification as indicated. Mark the white marking strip of all control terminal blocks with the same identification as the connecting wire in permanent black ink.

C. In Underground Duct Systems
   1. In accordance with Division 16 specifications.

D. In Cable Tray
   1. Install cables in tray at locations indicated with spaces left clear for the addition of future cables, and allow sufficient slack to permit expansion or contraction of cables. Clamp cables to tray at intervals of not more than ten feet in horizontal runs and two feet in vertical or sloping runs.

E. Splices And Terminations
   1. Splice and terminate conductors with connectors and lugs as specified for the specific size and type of conductor. Indent all compression type connectors and lugs with tools as recommended by the connector or lug manufacturer.
   2. Thoroughly clean wire ends before connectors or lugs are applied. Install the connector or lug immediately after wire brushing the conductor.
   3. Insulate all bare surfaces of conductors with a minimum of four layers (half lap in two directions) of electrical insulating tape.

4. Splices in instrument signal cables, i.e. 4-20 maDC, 1-10V DC, RTD, Thermocouple, etc. are not allowed. In those cases where continuous runs are not possible, provide approved terminal cabinets. Mount cabinets no higher then 6'-0" above finished floor or platform.

F. Cable Identification
   1. Identify cable groups and conduit at entering and leaving locations in manholes and handholes by means of 1/8 inch thick lead die-stamped tags with punched ears or stainless steel tags. Fasten tags around the cable group or conduit with No. 12 AWG copper wire.
   2. Identify cables in cable tray at intervals of 130 feet, at each side of walls, and at terminations and splices by means of strip aluminum with raised letters.
   3. Designate source and load, or feeder or cable identification on tags. Submit identification for the approval of the Consultant.

3.3 DISTRIBUTION EQUIPMENT SUPPORTS AND IDENTIFICATION

A. Anchor all self-supporting equipment securely to floors and to supporting steel where such supports are required.

B. Provide identification on all control panels installed in accordance with the following:
   1. On surfaces 4 inches by 4 inches and greater, hand paint or stencil with bright yellow paint, or provide good quality decal, with bright yellow letters.

3.4 GROUNDING

A. Where installed conductors are used, thoroughly tape all exposed connections.

B. Carry an equipment ground wire with all branch circuit conductors.

C. Where metallic conduit is used for mechanical protection of a ground conductor, bond conductor to the conduit at each end.

3.5 ELECTRICAL ACCEPTANCE TESTS

A. Description Of System
   1. Preliminary inspections and tests: Visual inspections of electrical equipment, wire checks of factory wiring and any other preliminary work required to prevent delays during performance of electrical acceptance tests.
   2. Electrical acceptance tests: Those inspections and tests required to show that the workmanship, methods, inspections, and materials used in erection and installation of electrical equipment conform with accepted engineering practices, IEEE Standards, IPCEA-NEMA Standards, electrical standards requirements, manufacturers instructions, and this Section, and to determine that the equipment involved may be energized for operational tests.
   3. Operating tests: Those tests performed on all electrical equipment installed under this Section, and under other Sections, to show that the electrical equipment will perform the functions for which it was designed.

4. Furnish all labor, materials, test equipment, and technical supervision to perform and record the electrical tests as specified, and perform and record all electrical tests as required, including tests on 600 volt wire and cable and control devices, unless otherwise specified.

3.6 FINAL ACCEPTANCE

A. In accordance with Division 16 specifications.

3.7 SCHEDULING OF TESTS

A. In accordance with Division 16 specifications.

3.8 GENERAL TESTING REQUIREMENTS

A. Preliminary Work
   1. Perform preliminary inspections and tests immediately prior to performing acceptance tests. Fuses and fusing devices, such as cable limiters, shall be omitted from cable tests and tests involving cables.

B. Continuity Tests
   1. In accordance with Division 16 specifications.

3.9 TESTS ON CONTROL WIRING

A. General
   1. Give each single conductor and multi-conductor control wire or cable a continuity test and megger test. Verify identification of conductors.

B. Connections
   1. Disconnect and fan out conductors to be tested.

C. Acceptance
   1. Wires must pass all tests.

D. Records
   1. Include the following information in test report on each wire group.
      a. Wire and group identification.
      b. Approximate average cable temperature.

3.10 TESTS ON WIRE AND CABLE IN 480 VOLT AND LOWER SERVICE

A. General
   1. In accordance with Division 16 specifications.

3.11 TESTS ON CONTROL DEVICES

A. In accordance with Division 16 specifications as modified herein.

B. Perform operating tests on all control or indicating devices installed under this Contract.

END OF SECTION

Revision History	
Date	**Rev. No.**
A	0
B	0
C	0
D	0
E	0
F	0
02-19-09	0

AWW/djo
C:\D\TIMSDATASF\BROOKHAVEN_NATIONAL_LABORATORY\SF070003\200-PROJEXEC\280-SPEC\13856.DOC

THIS PAGE INTENTIONALLY LEFT BLANK

SECTION 13865

CONTROL SYSTEMS EQUIPMENT

PART 1 GENERAL

1.1 SUMMARY

A. Scope
   1. Provide labor, materials, and equipment as specified in this section of the specifications and as indicated on DRAWINGS, including accessories as required by manufacturer for fully operational installation.
   2. All installation work provided shall be per the recommendations of the equipment manufacturers and as required by the manufacturer's installation instructions and shop drawings.
   3. Refer to SECTION 13855 and 13856 for additional control systems equipment requirements.
   4. The existing Automated Logic Inc. Building Management System (BMS) shall be extended to control and monitor the new HVAC systems installed as part of this project. The BMS shall also monitor the Refrigerant Monitor System.

B. Verification
   1. Study and compare drawings, specifications, methods of construction, and manufacturer's drawings and instructions.
   2. Bring discrepancies between manufacturer's instructions and the contract documents to the immediate attention of Owner or his representative for clarification.
      a. When details or specifications do not agree with the manufacturer's recommendations, advise the Owner or his representative so that corrective action can be taken.

C. Utilization Voltages
   1. Furnish controls and powered apparatus suitable for continuous and stable operation from the following power supplies:
      a. 480 volt, 3 phase, 60 hertz for motor loads.
      b. 120 volt, 1 phase, 60 hertz for inputs and outputs.
      c. 120 volt, 1 phase, 60 hertz for lighting, air conditioning, heating and receptacles.
      d. 120 volt, 1 phase UPS power for PLC controller.
      e. 4 – 20 mA/24 volts DC for analog inputs and outputs from card.
   2. Where equipment requires voltage other than 120 volts, furnish two-winding step-down transformer.
   3. If voltages other than those listed are required, provide means for transformation.

D. Design Considerations
   1. Design
      a. Design for single point lockout for greater than 120 volts.
      b. Auto restart after power outage.

c. Design control and alarm circuits to fail to safety. That is, open-circuiting of one wire, short-circuiting of wiring or failure of a component shall not cause machinery to start up. Failures shall bring equipment to a safe state.
d. Select electrical devices on the basis that a 15% voltage dip of 3 seconds or less, or 10% undervoltage indefinitely, does not cause equipment to shut down.
e. Furnish suitable circuit protection for controls so that one electrical fault does not affect more than one unit or system. Furnish protection by either circuit breaker or fuse with LED terminal.
f. Furnish a disconnecting means to permit servicing of individual systems or control components.
g. Furnish contacts such as relays, starters, etc. on 480 volt service for rating of 600 volts minimum; on 120 volt service provide rating for 300 volts minimum.
h. Furnish non-conductive removable covers over all exposed wire terminations to prevent inadvertent contact with any voltage source greater than 50 volts.
i. Communications with external systems TCP/IP and OPC.
j. Communication to remote racks Control Net.

1.2 QUALITY ASSURANCE

A. Provide per SECTION 13855.

1.3 SUBMITTALS

A. Provide per SECTION 13855.

B. Submittals
1. Typical manufacturer drawings are not acceptable unless revised to show specific equipment being furnished.
2. Submit shop drawings showing:
a. Equipment outline drawings showing locations of electrical equipment including dimensioned conduit stub-up locations as applicable. Identify components by suitable numbering system of same system used for schematics.
b. Certified dimension prints of electrical equipment.
c. Base and/or mounting dimensions, including weight of components.
d. Schematic diagrams of systems, including power and control equipment supplied.
e. Interconnection diagrams showing external connections to equipment furnished and with terminal block properly identified and showing in their true physical relationship within equipment.
f. Complete electrical material and equipment list including individual item electrical ratings, manufacturer name and catalogue number.
g. Recommended spare parts list; start-up and operation.
h. Installation operating and maintenance instruction manuals for electrical equipment as part of equipment manuals.
3. Do not start with equipment fabrication before above listed documents have been submitted and formally reviewed and returned by Consultant.
4. Submit test plans for approval.

5. After work is complete and testing has been executed:
   a. Submit final certified drawings.
   b. Submit test data reports.

PART 2 PRODUCTS

2.1 POWER OPERATED DAMPERS

A. Control Dampers
   1. *Multiblade Control Dampers [P]*: Parallel blades for two-position service and opposed blade design for modulating service. Provide interconnecting linkage between two damper assemblies, which are operated by a single damper operator. Face or bypass dampers shall be capable of passing 100% of unit rated cfm with pressure drops approximately the same in either extreme position when pressure drop includes coil and bypass components.
   2. Provide blades with nonferrous pivot pins or nonferrous-sleeved pivot pins, and flanged brass sleeve or 1/8 inch wall flanged steel sleeve, with flanged oil-impregnated • olite bushing or graphite impregnated nylon bushing. Provide brass washers between damper blades and • olite bushing flange. Linkages shall be provided with machined nonferrous moving contact surfaces with provisions for oiling. All other linkage connections shall be rigid.
   3. Provide blade edges and ends with seals for quiet operation and tight closure. Maximum seal leakage for outside air dampers, shall supply dampers utilized in common header system shall be provided with tight shut-off ability be 1% at 1 inch WG when fully closed. Calk frames into ductwork to prevent bypass leakage.
   4. Provide dampers with either a baked enamel finish, a zinc-rich paint finish, or galvanized. Nonferrous surfaces shall not be painted. Frames may be galvanized instead of painted, however, outside air exhaust and return damper frames shall be galvanized after fabrication.
   5. When dampers are provided under other SECTIONS or other Contracts, provide damper operators, linkages and all necessary accessories for proper operation. Coordinate damper operator sizes and quantity required with damper configuration being provided.

B. Damper Operators
   1. *Damper Operators [P]*: Pneumatic damper operators as indicated on the DRAWINGS.
   2. Pneumatic damper actuators shall be piston type with cast aluminum housing, rolling neoprene or molded reinforced elastomeric diaphragm, and adjustable external stops to limit stroke length. Outdoor locations or those locations where temperature falls below minimum operating temperatures shall be provided with equipment to protect actuators.
   3. Pneumatic operators shall be capable of providing smooth proportioning control under operating conditions normal to the system. Provide spring return operators for “two-position” control, unless otherwise indicated. Provide reversible operators for modulating control. Provide spring returns on modulating operators where required for fail-safe operation.

4. Equip dampers with operators of sufficient power to control dampers without flutter or hunting through the entire operating range at air velocities at least 20% greater than maximum velocity encountered in design operation. Damper operator rated torque shall be 200% of the torque required to operate the dampers. Furnish operators with sufficient power on close off to provide tight sealing against maximum pressures encountered in system.
5. Provide positioners where two or more operators are controlled from the same controller and where indicated. Positioners shall be mounted directly on the driven device. Feedback from the stem or rod shall be through a pilot spring. Starting point shall be adjustable from 2 to 12 PSI. Operating span shall be adjustable from 5 to 13 PSI.
6. Operators operating in sequence with other operators shall have adjustable operating ranges and setpoints. Operators shall have sufficient power on close off to provide tight sealing against maximum pressures encountered in system. Operators shall cause operated device to fail to position indicated.

2.2 CONTROL VALVES

A. General
1. *Control Valves [B,P]*: Provide control valves as specified and/or indicated on the control valve schedule. Refer to Appendix 13865-A and control valve schedule indicated in Appendix "A".
2. Control valves provided by this CONTRACTOR, but not listed on control valve schedules shall meet the requirements of the commercial grade control valve specification (Appendix 13865-A) and shall be sized by the valve supplier as required for the intended application.
3. Provide intelligent I/P Positioners on modulating valve actuators. Positioner shall use HART interface protocall.

B. Two–Way Solenoid Valves
1. *Two Way Solenoid Valves [B,P]*: Two-way solenoid valves shall be normally closed in-line type, suitable for compressed air service at 135 psig inlet pressure. Valve coil shall be continuous duty for 120 VAC, 60 Hz. Operation. Valve shall be 3/4-inch pipe size and 3/4-inch orifice size. Minimum Cv flow factor = 6. Operating pressure differential shall be 350 psi. Maximum fluid temperature 200 degree F. Coil enclosure shall be NEMA 4X rated.
2. Manufacturer:
   a. Automatic Switch Co. Cat. No. 8210B26.

2.3 CONTROL PANELS

A. Local Control Panels LCP
1. *Local Control Panels LCP [D]*: Provide a free-standing, NEMA 12, one, two or three door panel(s) of the size and configuration indicated on the DRAWINGS.
2. Panel shall be factory fabricated and assembled and shipped to the project site in one piece for installation.

3. Panel shall be fabricated with 14-gage steel. Panel shall be of welded construction reinforced with struts to facilitate mounting internal equipment. Provide lifting eyes for handling of the panel. All exterior seams shall be continuously welded and ground smooth. Door shall be pan type construction, with oil resistant gasket, with key locking handle, three-point latch, fast operating clamp assembly and common keys. Securely anchor panel to floor. All exterior hardware (screws, hinges, etc.) shall be high-grade steel with polished nickel or chrome plated finish. All interior hardware (screws, nuts, etc.) shall be steel, cadmium plated. Provide latches to hold doors in 90deg position. Roller latches shall be provided to hold door in closed position.
4. Prime coat all steel surfaces with two coats of an approved primer. Finish coat exterior surfaces with two coats of paint, color as selected by OWNER. Finish coat interior surfaces with two coats of white enamel. Finish surfaces shall be smooth and free of all runs, ripples and foreign or abrasion defects to present an unblemished appearance in all respects.
5. Provide perforated or slotted plastic covered wire troughs to route all internal panel wiring. Provide separate wire troughs to route all incoming field cables to the terminal blocks and field cables going directly to panel mounted equipment. Size wire troughs for a maximum of 50% fill.
6. Panel interior lighting shall be by fluorescent strip light fixtures mounted at the top of the panel. Light fixtures shall be wired to a door switch to energize when the door is open. Fixtures shall come complete with guards.
7. Provide 1/8 x 1 inch isolated copper ground bus for the total length of the panel for instrument grounds. Provide separate ground bus for equipment ground to 120 VAC powered field devices and fractional horsepower motors fed from panel.
8. Front panel layout shall, be as indicated on the drawings.
9. Provide one ControlNet ant one 120 VAC convenience outlet with ground fault circuit interrupter for 120VAC single phase service, NEMA 12/43, size 48, 3 Amp breaker, FJ-45 connector for ControlNet. Approved manufacturer shall be Grace Engineering, Model P-B4-M3RF3.
10. Provide 120-volt distribution panel with circuit breakers as required for distribution of 120 VAC throughout the control panel.
11. Provide fully operational control panel.
12. Perform factory acceptance test, witnessed by the Owner and Owner's Engineer to demonstrate complete, fully-functional panel.
13. Installation shall be in accordance with recommendations of the equipment manufacturers and as required by manufacturers' installation instructions and shop drawings.
14. All control cabinets with ten (10) square feet or more of backplate shall be supplied with a folding shelf on the outside of the door that is to be used for support of a programming terminal.
15. Approved Manufacturers as below:
    a. Hoffman.
    b. Hammond.
    c. Rittal.
16. Refer to SECTION 13855 for additional control panel requirements.

B. Wires
   1. As specified in Division 16 specifications and as modified and supplemented here.
   2. Use Belden 29500 Series VFD cable of the appropriate gage for wiring from MCCs to the variable frequency drives.

C. Communications Cable
   1. DH+ and RIO Cable
      a. The cable shall be 78 ohms, two conductor No. 20 stranded tinned copper, twin axial transmission line cable with tinned copper braid and drain wire. 100% shield coverage similar to a Belden 9463.
      b. This cable may be identified by the initial "DH+" or "RIO".
   2. Ethernet
      a. Enhanced CAT 6 unshielded twisted pair (4 pairs) with RJ-45 ends (main cabinet only).
      b. Fiber-optic duplex patch cord with SC ends.
      c. Fiber-optic cable
         1) Fiber count: 6 minimum.
         2) Fiber size: 62.5 microns.
         3) Fiber type: multimode.
         4) Jacket material: PVC.
         5) Connectors: SC ends.
   3. ControlNet
      a. The cable shall be RG-6 quad shield cable, similar to Belden 1189A.
      b. Taps shall be Allen-Bradley.
      c. Network terminations shall be Allen-Bradley.
      d. BNC connector shall be Allen-Bradley.

D. Controls Hardware
   1. PLCs system based on Allen-Bradley product line
      a. The main system PLC processors shall be ControlLogix series Revision Level 15 or Owner-approved equivalent. Secondary system PLC processor shall be from the Logix platform, or Owner-approved equivalent to meet the required application.
      b. The processor system shall have at least one Ethernet port. Additional ports for Data Highway Plus, remote I/O, DeviceNet, ControlNet or others may be required based on project requirements.
      c. Memory size shall depend on final application program to be installed in the processor. A minimum of 30% spare memory shall be available after final application program installation and system startup.
      d. The Owner must approve all processors.
   2. PLC input/output modules
      a. Discrete input modules shall be 16 bits and rated for 120 VAC.
      b. Discrete output modules shall be 16 bits and fused at 2 amps, 120 VAC.
      c. Discrete contact output modules shall be 16 bits and fused at 2 amps, 120 VAC.
      d. Analog input modules shall be 4-20 mA.
      e. Analog output modules shall be 4-20 mA.
      f. Specialty modules may be used when required (RTD, T/C, etc.).

g. I/O modules shall be provided in accordance with PLC manufacturer.
h. Provide the necessary I/O housing in accordance with series of I/O used with power supply to support housing.
    1) Provide sufficient I/O housing to support all inputs and outputs, including 20% spare installed capacity and 20% spare slot capacity.
i. Third party I/O modules for special applications shall be used only when the specified I/O modules are not applicable to the design and only with prior written approval from the Owner.

E. Local LMIs Based on Allen-Bradley Product Line
1. Color PanelView Plus 1000 minimum.
2. Communication: Ethernet or ControlNet.
3. The Owner must approve LMI.

F. Ethernet System
1. Ethernet Switch
    a. High performance unmanaged fast Ethernet switch for harsh industrial environments.
    b. 100 Mbit/1 Gbit Base T autosensor, 25% spare parts.
    c. Enhanced image software.
    d. External 24 VDC.
        1) N-Tron.
    e. Power Supply
        1) 24 VDC DIN rail-mountable power supply.
        2) Input voltage: 100-120/220-240V, 47-63 Hz.
            a) Acupian

G. Execution – General
1. Provide as required by equipment manufacturer for proper component operation.
2. Install enclosures so each door can open 120 degrees minimum.
3. Design control panel to keep internal temperature rise below component vendor specifications. Provide enclosure cooling if necessary and compensate for moisture and dirty air environments.
4. Segregate AC control wiring and DC analog wiring with dedicated wiring ducts and terminal strips. White wiring for AC, grey wiring duct for DC and blue wiring duct for intrinsic safety wiring.
5. Segregate internal and external (field) wiring by arranging the wiring duct accordingly.
6. Wiring duct shall be sized so that it will be no more than 50% full by NEC allowance.
7. Arrange terminal wiring in the following column order: vertical, top to bottom, left to right; control power circuit breaker, fuses, and distribution; I/O card 1; I/O card 2; etc. This generally follows ascending wire numbers.
8. All 120 VAC and discrete 24 VDC wiring within control panels shall be #16 AWG type THHN minimum. Wire size must be sufficient for maximum current in the circuit. Shielded signal wire shall be minimum #18 AWG twisted shielded cable. Communication cables shall meet manufacturer's recommendation. Wires for discrete I/O points between I/O card terminals and terminals in the control panel may be #18 AWG Type MTW or

manufacturer I/O module-ready cables. Power wires to and from I/O cards shall be #14 AWG Type THHN.

9. 120 VAC control wiring shall be red. 120 VAC control wiring within a control panel, deriving its power from an outside source shall be yellow and DC power wiring shall be blue.

2.4 FLOW DEVICES

A. Flow Meters

1. *Flow Meters [P]*: Refer to specification Appendix 13865-B for flow meter schedule and specifications.

B. Flow Switches – Thermal Dispersion Type

1. *Flow Switches – Thermal Dispersion Type [P]*: Provide flow switches where shown on the P & ID Drawings.
2. Flow switches shall have a setpoint range that shall extend below the minimum rated flow of the associated pump.
3. Flow switches shall be thermal dispersion type, 120 VAC power input, 2 Amp, single-pole-double-throw output contact with Hastelloy C wetted parts rated for 150 psig.
4. Manufacturer for flow switches in pipe sizes 2” and larger:
   a. Fluid Components, Inc. Model 12-64.
5. Manufacturer for flow switches in pipe sizes smaller than 2”:
   a. Fluid Components, Inc. Model FS2000L

2.5 LEVEL DEVICES

A. Level Switch Assemblies – Electrode Type

1. *Level Switch Assemblies – Electrode Type [P]*: Floatless electrode type with 316 stainless steel wire-suspended probes and electrode holder, flanged or pressure tight as required. Provide solid-state electrode actuated level relays of type and contact arrangement indicated. (Stilling well provided under the 15000 SERIES Sections of the specification.) (Provide stilling well where required to prevent wave action.)
2. Manufacturer:
   a. B/W Controls Div. of McGraw-Edison Co. Series 1500 induction relays.
   b. Magnesonic

B. Liquid Level Transmitters

1. *Liquid Level Transmitter [P]* Level Transmitter:
   a. Provide a packaged, FM approved, level gauge assembly complete with all auxiliary devices which meets all of the service conditions, measurement paramenters and calibration requirements as indicated. The level gauge assembly shall be fully compatible with the process fluid and ambient conditions encountered. Provide a complete specification sheet for each level gauge.
   b. Level gauge assembly shall consist of a gold plated nichrome wire helix and stainless steel base strip resistance tape sensor, housed in a polypropylene envelope, compact

polypropylene and neoprene filter assembly, PVC sensor housing, and a compact two wire 4-20 mA current transmitter.

c. Probe length shall be adequate to sense the full depth of the tank or sump per the CONTRACT DRAWINGS. The sensing housing shall mount to a 1-1/2" MNPT mounting connection fitting.

d. Provide a 1-1/2" PVC stilling tube, with two 1" vent holes located at the top, for field installation.

e. Manufacture:

1) JOWA Consilium, Aquatape.

2) Other approved.

2.6 PRESSURE DEVICES

A. Pressure Switches

1. *Pressure Switches [P]*: Local surface or pipe mounted switch to provide a contact closure on a pressure increase. Element shall be suitable for the service. Setpoint shall be adjustable over the full range of the instrument with adjustable on/off differential. Electrical switch rating shall be 10 amps at 100 volts AC.

2. Manufacturer:

a. Barksdale.

b. Dwyer.

c. United Electric.

d. Ashcroft

B. Differential Pressure Switches

1. *Differential Pressure Switches [P]*: Unit to provide a contact closure on a pressure differential increase between two points. Element shall be suitable for the service. Setpoint shall be adjustable over the full range of the instrument. Electrical switch rating shall be 10 amps at 100 volts AC.

2. Manufacturer:

a. Barksdale.

b. Dwyer.

c. United Electric.

C. Pressure/Differential Pressure Transmitters

1. *Pressure and Differential Pressure Transmitters [P]*: Pressure and differential pressure transmitters shall be 2-wire DC type having a 4 to 20 mADC output. Differential pressure transmitter ranges shall be field adjustable with a 5 to 1 turndown ratio between maximum and minimum spans. Units shall have adjustable output dampening. Complete with local indicator and hardware for pipe stand or surface mounting.

2. Accuracy: Differential Pressure Type – 0.2% of calibrated span. Pressure Type – 0.25% of calibrated span.

3. Standard Unit – Materials of construction for wetted parts: Cadmium plated carbon steel and 315 SST diaphragms.

4. Provide transmitter with HART interface module.

5. Manufacturer:
   a. Rosemount, Pressure Model 3051GP, Differential Pressure Model 3051 DP.

2.7 TEMPERATURE DEVICES

A. Temperature Transmitters
   1. *Temperature Transmitters [P]*: Transmitter shall accept a signal from integral or remote 3-wire 100-ohm platinum resistance type sensor. Output shall be 4-20 mADC 2-wire type with output signal linear with temperature. Loss of input shall force output high (upscale burnout). Accuracy shall be 0.2% of calibrated span. Complete with local indicator and hardware for pipe stand or surface mounting.
   2. Platinum resistance sensors shall be 3-wire 100-ohm type with 316 stainless steel sheath and 1/2-inch male pipe thread connector for thermowell mounting. Length to be as required per application. Remote mounted types to have gasketed screw on metal cover type head with field wiring terminals permanently mounted inside the head and provisions for connecting 1/2-inch conduit to the sensor head. For cooling water sump service, sheath shall extend sensor to 3-inches below pump cut-off level.
   3. Provide transmitter with HART interface module.
   4. Manufacturer:
      a. Rosemount, Model 644.

2.8 MISCELLANEOUS PANEL DEVICES

A. Power Supplies
   1. *Power Supplies [P]*: The output voltages and current capacity shall be as required by the control system with 20% spare capacity. A 24 VDC supply shall be provided for all field transmitters and transducers with 20% spare capacity.
   2. Power Supplies shall be of the high efficiency switched type for operation from 120 VAC +/- 10% input. Supply each unit with voltmeter, fuse, over voltage protection and a common NC failure alarm contact output. Provide local indication of output failure for each separate voltage output. For multiple output supplies the voltmeter shall have an output selector switch.
   3. Manufacturer:
      a. Acopian Corp.

B. AC Current Transmitters
   1. *AC Current Transmitters [P]*: AC current transmitter shall be a self contained unit with integral doughnut transformer, 4-20 mADC 2-wire output signal, 24 VDC powered. Operating temperature range shall be 0 to 158 deg. F., response time 150 milliseconds maximum. Accuracy 0.5% full scale, repeatability 0.25% full scale. AC current ranges: 1 to 600 AMPS full scale, provide suitable range to match each application.
   2. Manufacturer:
      a. C.S. Technologies Inc. 420 Series.
      b. Simpson – GIMA Series.

C. Push Buttons
   1. *Push buttons [P]*: Momentary contact push button units, non-illuminated. Push buttons shall be 30.5 mm, NEMA Type 4/13, watertight and oiltight.
   2. Two position push-pull/twist release units, non-illuminated. Push-pull unit shall be 30.5 mm, NEMA Type 4/13, watertight and oiltight.
   3. Manufacturer:
      a. Allen-Bradley – Bulletin 800T Series.
      b. Square D – Class 9001 – Type K.

D. Selector Switches
   1. *Selector Switches [P]*: Two-position, maintained contact, selector switch units, non-illuminated. Selector switches shall be 30.5 mm, NEMA Type 4/13, watertight and oiltight.
   2. Three-position, spring return to center, selector switch units, non-illuminated. Selector switches shall be 30.5 mm, NEMA Type 4/13, watertight and oiltight.
   3. Three-position, maintained contact, selector switch units, non-illuminated. Selector switches shall be 30.5 mm, NEMA Type 4/13, watertight and oiltight.
   4. Four-position, maintained contact, selector switch units, non-illuminated. Selector switches shall be 30.5 mm, NEMA Type 4/13, watertight and oiltight.
   5. Manufacturer:
      a. Allen-Bradley – Bulletin 800T Series.
      b. Square D – Class 9001 – Type K.

E. Pilot Lights
   1. *Push-To-Test Pilot Light Units [P]*: Pilot lights shall be 30.5 mm, NEMA Type 4/13, watertight and oiltight. Lens colors shall be green, amber, blue, white, or clear as indicated on the DRAWINGS.
   2. Manufacturer:
      a. Allen-Bradley – Bulletin 800T Series.
      b. Square D – Class 9001 – Type K.

F. Control Relays
   1. *Control Relays [P]*: Relays shall be of modular type with convertible contacts. Relay contacts shall have a minimum ten amp continuous rating.
   2. Master Control relays shall have contacts rated for 20 Amp continuous carrying current.
   3. Furnished surge suppressors (made by relay manufacturer) to be installed across the coil of each DC control relay.
   4. Manufacturer:
      a. Allen-Bradley – Bulletin 700 Type P and PK Direct Drive Cartridge Relays.
      b. Square D – Class 8501 – Type X and XMO.

G. Alarm Horn – Panel Mounted
   1. *Alarm Horn – Panel Mounted [P]*: Horn shall be semi-flush mounted.
   2. Horn shall be vibrating type.
   3. Voltage: 120 VAC.
   4. Manufacturer: Edwards Systems Technology – 884D-N5.

H. Alarm Horn – Speaker Cone and Projector

1. *Alarm Horn – Speaker Cone and Projector [P]*: The alarm horn construction shall be a rugged speaker cone and projector that are constructed of spun aluminum. The die-cast aluminum alarm horn enclosure shall house the internal amplification circuitry, tone module and gain control.
2. Horn shall be solid-state design.
3. Horn shall have built in gain control to allow adjustment of volume from 86dBA to 110dBA at 10 (ten) feet.
4. Alarm tone shall be continuous (steady horn).
5. Voltage: 24VDC.
6. Manufacturer:
   a. Federal Signal – 350GC and TM6 Steady Horn Module.

I. Rotating Beacon

1. *Rotating Beacon [P]:* The rotating beacon shall feature a parabolic reflector that rotates around a long life lamp, providing 60 flashes per minute in all directions.
2. The housing shall be rated for NEMA Type 3R applications and be constructed to IP41.
3. The lamp shall be rated for 40,000 hours MTBF.
4. Furnish colored dome as indicated on the drawings.
5. Voltage: 120VAC
6. Manufacturer:
   a. Federal Signal – Vitalite Rotating Warning Light – Model 121S.

J. Signal Conditioner/Isolator

1. *Signal Conditioner/Isolator [P]*: Provide process grade instruments for isolation of field mounted transmitters to panel mounted controllers and indicators. Instrument linearity to be better than 0.05% of full scale.

2.9 COMMERCIAL/HVAC PRODUCTS

A. Line Voltage Thermostats

1. *Line Voltage Thermostats [P]*: Integral manual On-Off-Auto selector switch type if indicated, maximum differential of 2 deg. F, concealed temperature adjustment cover design as approved. Line voltage thermostats shall be rated for the load, single or two-pole as required. Thermostat covers and finishes shall be manufacturer's standard with finishes as selected by the ARCHITECT-ENGINEER.
2. Provide insulating bases for thermostats located on exterior walls. Thermostat guards in office areas shall be finished metal type. Thermostat guards in shop and maintenance areas shall be industrial duty cast metal or wire guard type. Guards and thermostats shall be mounted on separate bases.

B. Electric Low Limit Thermostats

1. *Electric Low Limit Thermostats [P]*: Duct type, UL listed, range 30 to 60 deg. F. Sensing element shall be a 20-foot long capillary tube responding to the lowest temperature sensed along any 12 inches of bulb length. Switch shall be SPST 120/240

VAC, rated for 10 amps at 120 volts full load. Unit shall be manually reset. Provide on low limit thermostat for each 20 square feet or fraction thereof of coil surface area.

2. Manufacturer:
   a. Honeywell.
   b. Johnson Controls.
   c. Siemens.
   d. Invensys.

C. Thermometers
   1. *Thermometers [P]*: Provide thermometers adjacent to each duct, immersion thermostat, temperature sensor, where indicated on the DRAWINGS. Thermometers shall be of the remote bulb type with a minimum 4-1/2 inch diameter dial. Thermometers shall have aluminum case, brass or stainless steel movement, white face with black scale markings, liquid or mercury filled thermal system and with copper or brass bulb. Units shall have adjustment provisions for calibration without removing pointer. Provide thermowells for immersion service and extension necks for insulated ducts and piping.
   2. Capillary shall have bronze braided armor and shall be ambient temperature compensated if required to maintain specified accuracy at all ambient extremes. Case shall be ambient temperature compensated. Accuracy shall be plus or minus 1% or better of scale range. Maximum scale divisions shall be 2 deg. F. Select scale ranges such that all expected temperatures are within the range but that it does not extend beyond the extremes more than 25 degrees.
   3. Locate dial such that it can be easily red from floor level or operating platform. Provide sufficient capillary length and necessary bulb supports within air streams.
   4. Manufacturer:
      a. Ashcroft.
      b. Honeywell.
      c. Johnson Controls.
      d. Siemens.
      e. Invensys.
      f. Trerice.

D. Water Flow Switches
   1. *Water Flow Switches [P]*: UL listed, suitable for all service application conditions. Body minimum working pressure rating shall equal or exceed service pressure. Switch electrical rating shall be 230 VAC/3.7 ampere, 115 VAC/7.4 ampere and 125 VAC 115-230 VAC pilot duty. Unit shall have two SPST normally open switches. Actuating flow rate shall be field adjustable for the specified and indicated service. Switch location shall preclude exposure to turbulent or pulsating flow conditions. Flow switch shall not cause pressure drop exceeding 2 PSI at maximum system flow rate.
   2. Manufacturer:
      a. McDonnell-Miller.
      b. Johnson Controls.

E. Solenoid Valves
   1. *Solenoid Valves [P]*: UL Listed, heavy duty, field-mounted valves with brass or bronze body and stainless steel trim for 200-PSI WOG service. Rate solenoid for 120 VAC power supply; valves normally open (NO) or normally closed (NC) per indicated service application. Provide manual override operation.
   2. Manufacturer:
      a. Automatic Switch Co. (ASCO).
      b. Magnetrol Valve Corp.

F. Electrical Switches And Pilot Lights
   1. *Electrical Switches and Pilot Lights [P]*: Manual switches used for control of systems shall be NEMA 4/13 type with push-button or toggle operator and maintained or momentary contacts to provide required function. Pilot lights shall be NEMA 4/13 type with “Push-To-Test” function with integral transformer for 6-volt bulbs.
   2. Manufacturer:
      a. Allen-Bradley.
      b. Square D.
      c. General Electric.

G. Limit Switches
   1. *Limit Switches [P]*: Oil-tight type with operator as necessary to provide required function.
   2. Manufacturer:
      a. Allen-Bradley.
      b. General Electric.
      c. Square D.

H. Electrical System Accessories
   1. *Electrical System Accessories [B,P]*: Provide transformers, relays, solenoid valves, switches, pilot lights, and other devices and accessories required to complete indicated system. Refer to 13856 Series SECTIONS.

2.10 DIRECT DIGITAL CONTROLLERS

A. Equipment Manufacturer
   1. Automated Logic INC.

B. Communication
   1. Control products, communication media, connectors, repeaters, hubs, and routers shall comprise a BACnet internetwork. Controller and operator interface communication shall conform to ANSI/ASHRAE Standard 135-2004, BACnet.
   2. Install new wiring and network devices as required to provide a complete and workable control network. Use existing Ethernet backbone for network segments marked "existing" on project drawings.

3. Each controller shall have a communication port for temporary connection to a laptop computer or other operator interface. Connection shall support memory downloads and other commissioning and troubleshooting operations.
4. Internetwork operator interface and value passing shall be transparent to internetwork architecture.
    a. An operator interface connected to a controller shall allow the operator to interface with each internetwork controller as if directly connected. Controller information such as data, status, and control algorithms shall be viewable and editable from each internetwork controller.
    b. Inputs, outputs, and control variables used to integrate control strategies across multiple controllers shall be readable by each controller on the internetwork. Program and test all cross-controller links required to execute control strategies specified in Section 15900 Appendix A. An authorized operator shall be able to edit cross-controller links by typing a standard object address or by using a point-and-click interface.
    c. Controllers with real-time clocks shall use the BACnet Time Synchronization service. System shall automatically synchronize system clocks daily from an operator-designated controller via the internetwork. If applicable, system shall automatically adjust for daylight saving and standard time.
    d. System shall be expandable to at least twice the required input and output objects with additional controllers, associated devices, and wiring.

C. Controller Software
1. Building and energy management application software shall reside and operate in system controllers. Applications shall be editable through operator workstation, web browser interface, or engineering workstation.
2. Scheduling. See Paragraph 2.3.D.4 (View and Adjust Operating Schedules). System shall provide the following schedule options as a minimum:
    a. Weekly. Provide separate schedules for each day of the week. Each schedule shall be able to include up to 5 occupied periods (5 start-stop pairs or 10 events).
    b. Exception. Operator shall be able to designate an exception schedule for each of the next 365 days. After an exception schedule has executed, system shall discard and replace exception schedule with standard schedule for that day of the week.
    c. Holiday. Operator shall be able to define 24 special or holiday schedules of varying length on a scheduling calendar that repeats each year.
3. System Coordination. Operator shall be able to group related equipment based on function and location and to use these groups for scheduling and other applications.
4. Binary and Analog Alarms. See Paragraph 2.3.F.7 (Alarm Processing).
5. Alarm Reporting. See Paragraph 2.3.F.9 (Alarm Reactions).
6. Remote Communication. System shall automatically contact operator workstation or server on receipt of critical alarms. If no network connection is available, system shall use a modem connection.
7. Maintenance Management. System shall generate maintenance alarms when equipment exceeds adjustable runtime, equipment starts, or performance limits. Configure and enable maintenance alarms as specified in Section 15900 Appendix A (Sequences of Operation).

8. PID Control. System shall provide direct- and reverse-acting PID (proportional-integral-derivative) algorithms. Each algorithm shall have anti-windup and selectable controlled variable, setpoint, and PID gains. Each algorithm shall calculate a time-varying analog value that can be used to position an output or to stage a series of outputs.
9. Staggered Start. System shall stagger controlled equipment restart after power outage. Operator shall be able to adjust equipment restart order and time delay between equipment restarts.
10. Energy Calculations.
11. System shall accumulate and convert instantaneous power (kW) or flow rates (L/s [gpm]) to energy usage data.
12. System shall calculate a sliding-window average (rolling average). Operator shall be able to adjust window interval to 15 minutes, 30 minutes, or 60 minutes.
13. Anti-Short Cycling. Binary output objects shall be protected from short cycling by means of adjustable minimum on-time and off-time settings.
14. On and Off Control with Differential. System shall provide direct- and reverse-acting on and off algorithms with adjustable differential to cycle a binary output based on a controlled variable and setpoint.
15. Runtime Totalization. System shall provide an algorithm that can totalize runtime for each binary input and output. Operator shall be able to enable runtime alarm based on exceeded adjustable runtime limit. Configure and enable runtime totalization and alarms as specified in Section 15900 Appendix A (Sequence of Operations).

D. Controllers
1. General. Provide Building Controllers (BC), Advanced Application Controllers (AAC), Application Specific Controllers (ASC), Smart Actuators (SA), and Smart Sensors (SS) as required to achieve performance specified in Section 15900 Article 1.9 (System Performance). Every device in the system which executes control logic and directly controls HVAC equipment must conform to a standard BACnet Device profile as specified in ANSI/ASHRAE 135-2004, BACnet Annex L. Unless otherwise specified, hardwired actuators and sensors may be used in lieu of BACnet Smart Actuators and Smart Sensors.
2. BACnet.
   a. Building Controllers (BCs). Each BC shall conform to BACnet Building Controller (B-BC) device profile as specified in ANSI/ASHRAE 135-2004, BACnet Annex L and shall be listed as a certified B-BC in the BACnet Testing Laboratories (BTL) Product Listing.
   b. Advanced Application Controllers (AACs). Each AAC shall conform to BACnet Advanced Application Controller (B-AAC) device profile as specified in ANSI/ASHRAE 135-2004, BACnet Annex L and shall be listed as a certified B-AAC in the BACnet Testing Laboratories (BTL) Product Listing.
   c. Application Specific Controllers (ASCs). Each ASC shall conform to BACnet Application Specific Controller (B-ASC) device profile as specified in ANSI/ASHRAE 135-2004, BACnet Annex L and shall be listed as a certified B-ASC in the BACnet Testing Laboratories (BTL) Product Listing.
   d. Smart Actuators (SAs). Each SA shall conform to BACnet Smart Actuator (B-SA) device profile as specified in ANSI/ASHRAE 135-2004, BACnet Annex L and shall

be listed as a certified B-SA in the BACnet Testing Laboratories (BTL) Product Listing.

e. Smart Sensors (SSs). Each SS shall conform to BACnet Smart Sensor (B-SS) device profile as specified in ANSI/ASHRAE 135-2004, BACnet Annex L and shall be listed as a certified B-SS in the BACnet Testing Laboratories (BTL) Product Listing.

f. BACnet Communication.

1) Each BC shall reside on or be connected to a BACnet network using ISO 8802-3 (Ethernet) Data Link/Physical layer protocol and BACnet/IP addressing.

2) BACnet routing shall be performed by BCs or other BACnet device routers as necessary to connect BCs to networks of AACs and ASCs.

3) Each AAC shall reside on a BACnet network using ISO 8802-3 (Ethernet) Data Link/Physical layer protocol with BACnet/IP addressing, or it shall reside on a BACnet network using the ARCNET or MS/TP Data Link/Physical layer protocol.

4) Each ASC shall reside on a BACnet network using the ARCNET or MS/TP Data Link/Physical layer protocol.

5) Each SA shall reside on a BACnet network using the ARCNET or MS/TP Data Link/Physical layer protocol.

6) Each SS shall reside on a BACnet network using ISO 8802-3 (Ethernet) Data Link/Physical layer protocol with BACnet/IP addressing, or it shall reside on a BACnet network using ARCNET or MS/TP Data Link/Physical layer protocol.

3. Communication.

a. Service Port. Each controller shall provide a service communication port for connection to a Portable Operator's Terminal. Connection shall be extended to space temperature sensor ports where shown on drawings.

b. Signal Management. BC and ASC operating systems shall manage input and output communication signals to allow distributed controllers to share real and virtual object information and to allow for central monitoring and alarms.

c. Data Sharing. Each BC and AAC shall share data as required with each networked BC and AAC.

d. Stand-Alone Operation. Each piece of equipment specified in Section 15900 Appendix A shall be controlled by a single controller to provide stand-alone control in the event of communication failure. All I/O points specified for a piece of equipment shall be integral to its controller. Provide stable and reliable stand-alone control using default values or other method for values normally read over the network.

4. Environment. Controller hardware shall be suitable for anticipated ambient conditions.

a. Controllers used outdoors or in wet ambient conditions shall be mounted in waterproof enclosures and shall be rated for operation at -29°C to 60°C (-20°F to 140°F).

b. Controllers used in conditioned space shall be mounted in dust-protective enclosures and shall be rated for operation at 0°C to 50°C (32°F to 120°F).

5. Keypad. Provide a local keypad and display for each BC and AAC. Operator shall be able to use keypad to view and edit data. Keypad and display shall require password to prevent unauthorized use. If the manufacturer does not normally provide a keypad and display for each BC and AAC, provide the software and any interface cabling needed to use a laptop computer as a Portable Operator's Terminal for the system.

6. Real-Time Clock. Controllers that perform scheduling shall have a real-time clock.
7. Serviceability.
   a. Controllers shall have diagnostic LEDs for power, communication, and processor.
   b. Wires shall be connected to a field-removable modular terminal strip or to a termination card connected by a ribbon cable.
   c. Each BC and AAC shall continually check its processor and memory circuit status and shall generate an alarm on abnormal operation. System shall continuously check controller network and generate alarm for each controller that fails to respond.
8. Memory.
   a. Controller memory shall support operating system, database, and programming requirements.
   b. Each BC and AAC shall retain BIOS and application programming for at least 72 hours in the event of power loss.
   c. Each ASC and SA shall use nonvolatile memory and shall retain BIOS and application programming in the event of power loss. System shall automatically download dynamic control parameters following power loss.
9. Immunity to Power and Noise. Controllers shall be able to operate at 90% to 110% of nominal voltage rating and shall perform an orderly shutdown below 80% nominal voltage. Operation shall be protected against electrical noise of 5 to 120 Hz and from keyed radios up to 5 W at 1 m (3 ft).
10. Transformer. ASC power supply shall be fused or current limiting and shall be rated at a minimum of 125% of ASC power consumption.

E. Input and Output Interface
1. General. Hard-wire input and output points to BCs, AACs, ASCs, or SAs.
2. Protection. Shorting an input or output point to itself, to another point, or to ground shall cause no controller damage. Input or output point contact with up to 24 V for any duration shall cause no controller damage.
3. Binary Inputs. Binary inputs shall monitor the on and off signal from a remote device. Binary inputs shall provide a wetting current of at least 12 mA and shall be protected against contact bounce and noise. Binary inputs shall sense dry contact closure without application of power external to the controller.
4. Pulse Accumulation Inputs. Pulse accumulation inputs shall conform to binary input requirements and shall accumulate up to 10 pulses per second.
5. Analog Inputs. Analog inputs shall monitor low-voltage (0-10 Vdc), current (4-20 mA), or resistance (thermistor or RTD) signals. Analog inputs shall be compatible with and field configurable to commonly available sensing devices.
6. Binary Outputs. Binary outputs shall send an on-or-off signal for on and off control. Building Controller binary outputs shall have three-position (on-off-auto) override switches and status lights. Outputs shall be selectable for normally open or normally closed operation.
7. Analog Outputs. Analog outputs shall send a modulating 0-10 Vdc or 4-20 mA signal as required to properly control output devices. Each Building Controller analog output shall have a two-position (auto-manual) switch, a manually adjustable potentiometer, and status lights. Analog outputs shall not drift more than 0.4% of range annually.

8. Tri-State Outputs. Control three-point floating electronic actuators without feedback with tri-state outputs (two coordinated binary outputs). Tri-State outputs may be used to provide analog output control in zone control and terminal unit control applications such as VAV terminal units, duct-mounted heating coils, and zone dampers.
9. Universal Inputs and Outputs. Inputs and outputs that can be designated as either binary or analog in software shall conform to the provisions of this section that are appropriate for their designated use.

2.11 OPERATORS WORKSTATION

A. Minimum PC requirements for Wonderware client stations:

Item	Specification
Processor	Dual-Intel 3.4 Ghz Xeon
Memory	4 Gb 400MHz DDR2 RAM
Hard Drive	146 GB 2xRAID HD
Bus	800MHz Front side Bus
Network	Embedded Gigabit Server Adapter
Optical Drive	24x IDE DVD-ROM
OS	Windows XP

PART 3 EXECUTION

3.1 CONTROL COMPONENT INSTALLATION

A. Provide per SECTIONS 13855, and 13856 and as required by equipment manufacturer for proper component operation.

END OF SECTION

Revision History	
Date	Rev. No.
A	0
B	0
C	0
D	0
E	0
F	0
02-19-09	0

AWW/djo [IC, CV, EL, ME]
C:\d\timsdatasf\BROOKHAVEN_NATIONAL_LABORATORY\SF070003\200-PROJEXEC\280-SPEC\13865.doc

THIS PAGE INTENTIONALLY LEFT BLANK

SECTION 13865A

APPENDIX A - AUTOMATIC CONTROL VALVES

AUTOMATIC CONTROL VALVE INDEX

APPENDIX A INDEX	13865A-1
AUTOMATIC HIGH PERFORMANCE BUTTERFLY VALVE: TYPE HPBV-1 SPECIFICATION	13865A-2
AUTOMATIC HIGH PERFORMANCE BUTTERFLY VALVE: TYPE HPBV-2 SPECIFICATION	13865A-3
AUTOMATIC ECCENTRICALLY ROTATING PLUG VALVE: TYPE ERPV-1 SPECIFICATION	13865A-4
AUTOMATIC CAGE GUIDED GLOBE VALVE WITH NOISE SUPPRESSION TRIM: TYPE CGNV-1 SPECIFICATION	13865A-5
AUTOMATIC TWO POSITION BALL VALVE: TYPE TPBV-1 SPECIFICATION	13865A-6
COMMERCIALLY QUALITY AUTOMATIC CONTROL VALVE: TYPE CCV-1 SPECIFICATION	13865A-7
AUTOMATIC CONTROL VALVE SCHEDULE	

GENERAL CONTROL VALVE TECHNICAL SPECIFICATION SHEET

AUTOMATIC HIGH PERFORMANCE BUTTERFLY VALVE: TYPE **HPBV-1**
SEE THE AUTOMATIC CONTROL VALVE SCHEDULE FOR SPECIFIC TECHNICAL REQUIREMENTS.

1.	GENERAL:	
	PROVIDE AN AUTOMATIC ECCENTRICALLY-ROTATING DISC, HIGH PERFORMANCE BUTTERFLY VALVE COMPLETE WITH AUTOMATIC ACTUATOR AND AUXILIARY CONTROL DEVICES AS INDICATED WHICH MEETS ALL OF THE SERVICE CONDITIONS, VALVE SIZING PARAMETERS AND CRITERIA INDICATED ON THE AUTOMATIC CONTROL VALVE SCHEDULE.	
2.	TECHNICAL:	VALVE BODY AND ACTUATOR ASSEMBLY
	VALVE TYPE:	HIGH PERFORMANCE BUTTERFLY.
	CONNECTION:	WAFER
	BODY MATERIAL:	CARBON STEEL
	BODY RATING:	ANSI 150
	BEARING MATERIAL:	TFE OR TFE LINED.
	DISC MATERIAL:	316 STAINLESS STEEL.
	SHAFT:	ONE PIECE, SPLINED CONNECTION.
	SHAFT MATERIAL:	17-4PH STAINLESS STEEL.
	SEAT MATERIAL:	PROVIDE AS INDICATED
	SEAT LEAKAGE:	SOFT SEAT: ANSI CLASS VI.
	FLOW CHARACTERISTIC:	EQUAL PERCENTAGE (INHERENT).
	C_V RATIO:	100:1 OR GREATER (INHERENT).
	ACTUATOR:	ROTORK, ELECTRIC 460VAC 30 MOTOR, ACTUATOR MOUNTED “LOCAL-OFF-REMOTE” SELECTOR SWITCH AND “OPEN”, “CLOSE” AND “STOP” PUSH BUTTONS.
	FAILURE POSITION:	FAIL INTERMEDIATE
	HANDWHEEL:	SIDE-MOUNTED, DE-CLUTCHABLE.
3.	AUXILIARY CONTROL DEVICES:	
	PROVIDE AUXILIARY CONTROL DEVICES AS INDICATED ON THE AUTOMATIC CONTROL VALVE SCHEDULE.	
4.	MANUFACTURER:	
	A. FISHER CONTROLS, 8500 SERIES CONTROL VALVE.	
	B. MASONEILAN, 39000 SERIES CONTROL VALVE.	
	C. VALTEK, VALDISK SERIES CONTROL VALVE.	
	D. NELES JAMESBURY	SERIES 800 (SOFT SEAT)

GENERAL CONTROL VALVE TECHNICAL SPECIFICATION SHEET

AUTOMATIC HIGH PERFORMANCE BUTTERFLY VALVE: TYPE **HPBV-2**
SEE THE AUTOMATIC CONTROL VALVE SCHEDULE FOR SPECIFIC TECHNICAL REQUIREMENTS.

1.	GENERAL:	
	PROVIDE AN AUTOMATIC ECCENTRICALLY-ROTATING DISC, HIGH PERFORMANCE BUTTERFLY VALVE COMPLETE WITH AUTOMATIC ACTUATOR AND AUXILIARY CONTROL DEVICES AS INDICATED WHICH MEETS ALL OF THE SERVICE CONDITIONS, VALVE SIZING PARAMETERS AND CRITERIA INDICATED ON THE AUTOMATIC CONTROL VALVE SCHEDULE.	
2.	TECHNICAL:	VALVE BODY AND ACTUATOR ASSEMBLY
	VALVE TYPE:	HIGH PERFORMANCE BUTTERFLY.
	CONNECTION:	WAFER
	BODY MATERIAL:	CARBON STEEL
	BODY RATING:	ANSI 150
	BEARING MATERIAL:	TFE OR TFE LINED.
	DISC MATERIAL:	316 STAINLESS STEEL.
	SHAFT:	ONE PIECE, SPLINED CONNECTION.
	SHAFT MATERIAL:	17-4PH STAINLESS STEEL.
	SEAT MATERIAL:	PROVIDE AS INDICATED
	SEAT LEAKAGE:	SOFT SEAT: ANSI CLASS VI.
	FLOW CHARACTERISTIC:	EQUAL PERCENTAGE (INHERENT).
	C_V RATIO:	100:1 OR GREATER (INHERENT).
	ACTUATOR:	CYLINDER OPERATOR, SPRING RETURN WITH VALVE POSITION INDICATOR.
	FAILURE POSITION:	AS INDICATED.
	HANDWHEEL:	SIDE-MOUNTED, DE-CLUTCHABLE.
3.	AUXILIARY CONTROL DEVICES:	
	PROVIDE AUXILIARY CONTROL DEVICES AS INDICATED ON THE AUTOMATIC CONTROL VALVE SCHEDULE.	
4.	MANUFACTURER:	
	A. FISHER CONTROLS, 8500 SERIES CONTROL VALVE.	
	B. MASONEILAN, 39000 SERIES CONTROL VALVE.	
	C. VALTEK, VALDISK SERIES CONTROL VALVE.	
	D. NELES JAMESBURY	SERIES 800 (SOFT SEAT)

GENERAL CONTROL VALVE TECHNICAL SPECIFICATION SHEET

AUTOMATIC ECCENTRICALLY ROTATING PLUG VALVE (TYPE **ERPV-1**)

SEE THE AUTOMATIC CONTROL VALVE SCHEDULE FOR SPECIFIC TECHNICAL REQUIREMENTS:

1. GENERAL	
PROVIDE AN AUTOMATIC STRAIGHT-THROUGH, ECCENTRICALLY ROTATING PLUG VALVE COMPLETE WITH AUTOMATIC ACTUATOR AND AUXILIARY CONTROL DEVICES AS INDICATED WHICH MEETS ALL OF THE SERVICE CONDITIONS, VALVE SIZING PARAMETERS AND CRITERIA INDICATED ON THE AUTOMATIC CONTROL VALVE SCHEDULE.	
2. TECHNICAL:	VALVE BODY AND ACTUATOR ASSEMBLY
VALVE TYPE:	ECCENTRICALLY ROTATING PLUG VALVE
CONNECTION	(THREADED) (FLANGLESS) (FLANGED)
LINE BOLTS:	MANUFACTURERS STANDARD
BODY MATERIAL:	CARBON STEEL OR STAINLESS STEEL AS INDICATED.
BODY RATING:	ANSI 150, 300 OR 600 AS INDICATED.
PLUG TYPE:	SELF-ALIGNING
PLUG MATERIAL	300 SERIES STAINLESS STEEL
SHAFT:	ONE PIECE, SPLINED CONNECTION
SHAFT MATERIAL:	17-4PH STAINLESS STEEL
BEARING MATERIAL	TFE OR TFE LINED
SEAT MATERIAL:	PROVIDE AS INDICATED
	METAL SEAT: 316 SS
	SOFT SEAT: TFE
SEAT LEAKAGE:	METAL SEAT: ANSI CLASS IV
	SOFT SEAT: ANSI CLASS VI
FLOW CHARACTERISTIC:	EQUAL PERCENTAGE (INHERENT)
C_V RATIO:	100:1 OR GREATER (INHERENT)
ACTUATOR:	PNEUMATIC SPRING AND DIAPHRAGM WITH VALVE POSITION INDICATOR.
FAILURE POSITION:	AS INDICATED.
HANDWHEEL:	SIDE-MOUNTED, DECLUTCHABLE.
3. AUXILIARY CONTROL DEVICES:	
A. PROVIDE AS INDICATED ON THE AUTOMATIC CONTROL VALVE SCHEDULE	
B. PROVIDE INTELLIGENT POSITIONER WITH HART INTERFACE.	
C. PROVIDE ADJUSTABLE OPEN AND CLOSE STROKING SPEED CONTROLS AND ANY AUXILIARY DEVICES NECESSARY TO PROVIDE THE STROKING SPEEDS AS SCHEDULED. PROVIDE LOCK-NUT LOCKING SPEED CONTROL VALVES. PROVIDE VOLUME TANKS WHERE NECESSARY FOR SPEED CONTROL ADJUSTMENT. SPEED CONTROLS SHALL PROVIDE SMOOTH CONTINUOUS VALVE STROKING WITHOUT DEADTIME, SUDDEN MOVEMENT, OR JERKING DURING VALVE STROKING.	
4. MANUFACTURER:	
A. FISHER CONTROLS, V500 SERIES CONTROL VALVE.	
B. CASHCO, RANGER QCT	
C. MASONEILAN, 35002 SERIES CONTROL VALVE	
D. NELES JAMESBURY FINETROL SERIES.	

GENERAL CONTROL VALVE TECHNICAL SPECIFICATION SHEET

AUTOMATIC TWO POSITION BALL VALVE: TYPE **TPBV-1**

SEE THE AUTOMATIC CONTROL VALVE SCHEDULE FOR SPECIFIC TECHNICAL REQUIREMENTS.

1. GENERAL:	
PROVIDE AN AUTOMATIC TWO-POSITION BALL VALVE COMPLETE WITH AUTOMATIC ACTUATOR AND AUXILIARY CONTROL DEVICES AS INDICATED WHICH MEETS ALL OF THE SERVICE CONDITIONS, VALVE SIZING PARAMETERS AND CRITERIA INDICATED ON THE AUTOMATIC CONTROL VALVE SCHEDULE. PROVIDE A COMPLETE SPECIFICATION SHEET WITH EACH CONTROL VALVE.	
2. TECHNICAL:	VALVE BODY AND ACTUATOR ASSEMBLY
VALVE TYPE:	TWO PIECE BODY AND BALL
CONNECTION:	THREADED NPT
BODY MATERIAL:	CARBON STEEL
MINIMUM BODY RATING:	150 PSI AT 366 DEG.F. WSP, 600 PSI AT 100 DEG.F. CWP.
SEATS:	TFE FILLED
SEALS:	TFE
LEAKAGE:	SOFT SEAT: ANSI CLASS VI
ACTUATOR:	PROVIDE 120VAC ELECTRIC OR PNEUMATIC, AS LISTED IN THE VALVE SCHEDULE.
3. AUXILIARY CONTROL DEVICES:	
A. LIMIT SWITCHES:	ADJUSTABLE OPEN AND CLOSED LIMIT SWITCHES SHALL EACH BE SPDT WITH 10 AMP CONTACTS AT 120 VAC.
B. PROVIDED AS INDICATED ON THE AUTOMATIC CONTROL VALVE SCHEDULE.	
C. PROVIDE ADJUSTABLE OPEN AND CLOSE STROKING SPEED CONTROLS AND ANY AUXILIARY DEVICES NECESSARY TO PROVIDE THE STROKING SPEEDS AS SCHEDULED. SPEED CONTROLS SHALL PROVIDE SMOOTH CONTINUOUS VALVE STROKING WITHOUT DEADTIME, SUDDEN MOVEMENT, OR JERKING DURING VALVE STROKING.	
4. MANUFACTURER:	
A. JAMESBURY “CLINCHER TYPE 2000”(1/4 THRU 2 INCHES)	
B. WORCESTER CONTROLS	

GENERAL CONTROL VALVE TECHNICAL SPECIFICATION SHEET

COMMERCIAL QUALITY AUTOMATIC CONTROL VALVE: TYPE **CCV-1** THIS SPECIFICATION APPLIES TO GENERAL-PURPOSE, COMMERCIAL-QUALITY, AUTOMATIC CONTROL VALVES.

1.	GENERAL:	
	PROVIDE AN AUTOMATIC, STRAIGHT-THROUGH OR THREE-WAY BRASS, BRONZE OR CAST IRON-BODIED, GLOBE-STYLE CONTROL VALVE ASSEMBLY COMPLETE WITH AUTOMATIC ACTUATOR AND AUXILIARY CONTROL DEVICES AS INDICATED, WHICH MEETS ALL OF THE SERVICE CONDITIONS, VALVE SIZING GUIDELINES AND OTHER CRITERIA REQUIRED FOR THE APPLICATION. THE OPERATING AND CLOSE-OFF PRESSURE DROPS THROUGH THE VALVE SHALL NOT EXCEED THE MANUFACTURER'S RECOMMENDATIONS. THE CONTROL VALVE BODY RATING SHALL MEET OR EXCEED THE TEMPERATURE/PRESSURE RATINGS OF THE PIPING SYSTEM IN WHICH THE VALVE IS INSTALLED. THE VALVE BODY PIPING CONNECTION SHALL BE COMPATIBLE WITH THE ASSOCIATED PIPING SYSTEM.	
2.	TECHNICAL:	VALVE BODY AND ACTUATOR ASSEMBLY
	VALVE TYPE:	GLOBE-STYLE
	CONNECTION:	SCREWED: 1/2" THROUGH 2" FLANGED: 2-1/2 AND LARGER
	BODY MATERIAL:	BRASS, BRONZE OF CAST IRON, BASED ON REQUIRED VALVE SIZE AND BODY RATING
	PACKING MATERIAL:	TFE OR ELASTOMER, NO ASBESTOS
	TRIM MATERIAL:	STAINLESS STEEL.
	SEAT RING:	REPLACEABLE ON 2-1/2" AND LARGER VALVES.
	FLOW CHARACTERISTIC:	EQUAL PERCENTAGE (INHERENT)
	C_V RATIO:	25:1 (MINIMUM)
	ACTUATOR:	PNEUMATIC SPRING AND DIAPHRAGM OR ELECTRIC AS INDICATED. MAXIMUM ALLOWABLE CONTROL AIR PRESSURE FOR PNEUMATIC ACTUATORS IS 25 PSIG.
3.	AUXILIARY CONTROL DEVICES:	
	A. PROVIDE AUXILIARY CONTROL DEVICES AS INDICATED OR REQUIRED FOR THE APPLICATION	
4.	CONTROL VALVE SIZING PARAMETERS:	
	A. UNLESS OTHERWISE INDICATED, USE THE FOLLOWING CONTROL VALVE SIZING PARAMETERS TO SIZE AND SELECT THE AUTOMATIC CONTROL VALVES PROVIDED UNDER THIS SPECIFICATION.	
5.	MANUFACTURER:	
	A. HONEYWELL	
	B. JOHNSON CONTROLS	
	C. SIEMENS	

END OF SECTION

Revision History	
Date	**Rev. No.**
A	0
B	0
C	0
D	0
E	0
F	0
02-19-09	0

AWW/djo
C:\d\timsdatasf\BROOKHAVEN_NATIONAL_LABORATORY\SF070003\200-PROJEXEC\280-SPEC\13865A1.doc

THIS PAGE INTENTIONALLY LEFT BLANK

LEGEND

FLUID TYPES

CA	COMPRESSED AIR
CHW	CHILLED WATER
CNW	COOLING WATER/CONDENSER WATER
HHW	HEATING HOT WATER
IA	INSTRUMENT AIR
IW	INDUSTRIAL WASTE
NG	NATURAL GAS
SWS	SERVICE WATER SUPPLY
ST	STEAM

FLOW UNITS

CFH	CUBIC FEET PER HOUR
CFM	CUBIC FEET PER MINUTE
GPM	GALLONS PER MINUTE
LB/HR	POUNDS PER HOUR
ACFH	ACTUAL CUBIC FEET PER HOUR
ACFM	ACTUAL CUBIC FEET PER MINUTE
SCFH	STANDARD CUBIC FEET PER HOUR
SCFM	STANDARD CUBIC FEET PER MINUTE

FAIL POSITIONS

FC	FAIL CLOSED
FO	FAIL OPEN
FI	FAIL INTERMEDIATE
NC	NORMALLY CLOSED
NO	NORMALLY OPEN

MATERIALS

BR	BRASS
BRZ	BRONZE
CI	CAST IRON
CS	CARBON STEEL
SS	STAINLESS STEEL

BODY END CONNECTIONS

FLGD	FLANGED
FGLS	FLANGELESS
LGD	LUGGED
SCRD	SCREWED-NPT
WFR	WAFER

ACTUATOR TYPES

PS&D	PNEUMATIC SPRING & DIAPHRAGM
CYL	CYLINDER OPERATOR
CYLR	CYLINDER OPERATOR, SPRING RETURN
ELEC	ELECTRIC MOTOR-OPERATED
HW	HANDWHEEL
SOL	SOLENOID
VO	VANE OPERATOR
VOR	VANE OPERATOR, SPRING RETURN

* LIMIT SWITCHES: PROVIDE AN ISOLATED SINGLE-POLE, DOUBLE-THROW VALVE POSITION LIMIT SWITCH FOR EACH VALVE POSITION AS INDICATED.

AUTOMATIC CONTROL VALVE SCHEDULE

					SERVICE CONDITIONS						VALVE REQUIREMENTS														
							FLOW RATE												Δ P (PSID)		AUXILIARY DEVICES				
CONTROL VALVE TAG NO.	SERVICE	FLUID	LINE SIZE (IN)	MIN. VALVE SIZE	TEMP (°F)	SP. GR.	MINIMUM	DESIGN	UNITS	NORMAL/ FAIL POS.	BODY MATERIAL	ANSI CLASS BODY RATING	END CONN.	VALVE SPEC TYPE	ANSI SEAT LEAK CLASS	TRIM MATERIAL	ACTUATOR TYPE	VALVE SHUTOFF PRESSURE (PSIG)	MINIMUM	MAXIMUM	POSITIONER	TRANSDUCER 4-20mADC	SOLENOID	LIMIT* SWITCH	REMARKS
MOV 715	CLGTWR CTC-5	CNW	14	14	95	1	-	3750	GPM	FI	CS	150	LGD	HPBV 1	VI	SS	ELEC HW	65	-	0.1	NO	NO	NO	OPEN CLOSE	
MOV 800	CLGTWR CTC-5	CNW	2	2	95	1	-	20	GPM	FO	CS	150	SCRD	TPBV 1	VI	SS	ELEC HW	65	-	0.1	NO	NO	NO	OPEN CLOSE	
MOV 716	CLGTWR CTC-6	CNW	14	14	95	1	-	3750	GPM	FI	CS	150	LGD	HPBV 1	VI	SS	ELEC HW	65	-	0.1	NO	NO	NO	OPEN CLOSE	
MOV 801	CLGTWR CTC-6	CNW	2	2	95	1	-	20	GPM	FO	CS	150	SCRD	TPBV 1	VI	SS	ELEC HW	65	-	0.1	NO	NO	NO	OPEN CLOSE	
MOV 714	CLGTWG BYPASS	CNW	14	14	95	1	-	3750	GPM	FI	CS	150	WFR	HPBV 1	VI	SS	ELEC HW	65	-	0.1	NO	NO	NO	OPEN CLOSE	
FV 732	CHL-5	CNW	14	14	85	1	-	3750	GPM	FO	CS	150	LGD	HPBV 2	VI	SS	CYLR HW	65	-	0.1	NO	NO	YES	OPEN CLOSE	
FV 733	CHL-6	CNW	14	14	85	1	-	3750	GPM	FO	CS	150	LGD	HPBV 2	VI	SS	CYLR HW	65	-	0.1	NO	NO	YES	OPEN CLOSE	
CV 731	CLG TWR BLW DN	CNW	3	2	85	1	-	90	GPM	FC	CS	150	SCRD	TPBV 1	VI	SS	CYLR HW	65	-	28	NO	NO	YES	OPEN CLOSE	Slow Open/Close Set: 15 Sec.
FV 649	CHL-5	CHW	12	12	52	1	-	3000	GPM	FO	CS	150	LGD	HPBV 2	VI	SS	CYLR HW	65	-	0.1	NO	NO	YES	OPEN CLOSE	
TCV 653	CHL-5	CHW	8	6	42	1	-	470	GPM	FC	CS	150	WFR	ERPV 1	VI	SS	PS&D HW	65	-	5	YES	YES	NO	NO	
FV 650	CHL-6	CHW	12	12	52	1	-	3000	GPM	FO	CS	150	LGD	HPBV 2	VI	SS	CYLR HW	65	-	0.1	NO	NO	YES	OPEN CLOSE	
TCV 654	CHL-6	CHW	8	6	42	1	-	470	GPM	FC	CS	150	WFR	ERPV 1	V	SS	PS&D HW	65	-	5	YES	YES	NO	NO	
PCV 504	Back Press Ctl	CHW	12	10	52	1	-	3000	GPM	FO	CS	150	WFR	ERPV 1	V	SS	PS&D HW	70	-	10	YES	YES	NO	NO	
TCV 788	IAC-3	CHW	1-1/2	1-1/2	42	1	-	33	GPM	3-WAY	BRZ	125	SCRD	CCV 1	-	SS	PS&D	-	-	3	YES	YES	NO	NO	
FV 790	IAC-3	CHW	1-1/2	1-1/2	42	1	-	17	GPM	FO	CS	150	SCRD	TPBV 1	VI	SS	CYLR	65	-	0.1	NO	NO	YES	OPEN CLOSE	
FV 777	AD-3	CHW	1-1/2	1-1/2	42	1	-	13	GPM	FO	CS	150	SCRD	TPBV 1	VI	SS	CYLR	65	-	0.1	NO	NO	YES	OPEN CLOSE	
LV 734	CLG TWR MAKE-UP	SWS	4	3	55	1	-	282	GPM	FO	CS	150	FLGD	TPBV 1	VI	SS	CYLR	65	-	10	NO	NO	YES	OPEN CLOSE	Slow Open/Close Set: 15 Sec.

THIS PAGE INTENTIONALLY LEFT BLANK

SECTION 13865B

APPENDIX B - FLOW METERS
FLOW METERS INDEX

APPENDIX B INDEX	13865B-1
ELECTROMAGNETIC FLOW METER: TYPE EMFM-1 SPECIFICATION	13865B-2
AVERAGING PITOT TUBE FLOW METER TYPE APFM-1 SPECIFICATION	13865B-3
THERMAL DISPERSION FLOW METER TYPE TDFM-1	13865B-4

GENERAL FLOW METER TECHNICAL SPECIFICATION SHEET

FLOW METER TYPE: ELECTROMAGNETIC (TYPE EMFM-1)
SEE THE FLOW METER SCHEDULE FOR SPECIFIC TECHNICAL REQUIREMENTS.

1. GENERAL:

PROVIDE AN ELECTROMAGNETIC FLOW METER ASSEMBLY COMPLETE WITH ALL AUXILIARY DEVICES, WHICH MEETS ALL OF THE SERVICE CONDITIONS, FLOW PARAMETERS AND CALIBRATION REQUIREMENTS AS INDICATED. THE FLOW METER ASSEMBLY MATERIALS OF CONSTRUCTION SHALL BE FULLY COMPATIBLE WITH THE PROCESS FLUIDS AND THE AMBIENT CONDITIONS. PROVIDE A COMPLETE SPECIFICATION SHEET FOR EACH METER.

2. TECHNICAL:

CONSTRUCTION:	WATERTIGHT, GENERAL USE
PROCESS FLUID:	AS SCHEDULED
METER TYPE:	ELECTROMAGNETIC
PROCESS LINE SIZE:	AS SCHEDULED
NOMINAL METER SIZE:	AS SCHEDULED
METER END CONNECTIONS:	FLANGED OR AS SCHEDULED
ANSI BODY RATING:	ANSI CLASS 150
BODY MATERIAL:	STAINLESS STEEL (SUS 304)
BODY LINER:	TEFLON PFA OR PFTE
ELECTRODE MATERIAL:	STAINLESS STEEL (SUS 316L)
EARTH RING:	STAINLESS STEEL (SUS 316)
MAXIMUM ALLOWABLE METER PERMANENT PRESSURE DROP:	0.1 PSI AT MAXIMUM DESIGN FLOW
ACCURACY:	+/- 0.5% OF RATE
TRANSMITTER OUTPUT SIGNAL:	4 TO 20 mADC ANALOG RATE
FLOW METER CALIBRATION RANGE:	AS SCHEDULED
FLOW METER POWER REQUIREMENTS:	120 VAC / 10 / 60 Hz.
CONVERTOR:	SELF-CONTAINED AT METER
LOCAL ANALOG METER:	NOT REQUIRED
INSTRUMENT GROUNDING:	PROVIDE PER MANUFACTURER

3. MANUFACTURER:

A. ENDRESS & HAUSER – PROMAG SERIES
B. ABB – MAGMASTER SERIES
C. EMCO – MAGFLO SERIES
D. BAILEY, FISCHER + PORTER – 10DX SERIES
E. KROHNE – AQUAFLUX SERIES

GENERAL FLOW METER TECHNICAL SPECIFICATION SHEET

FLOW METER TYPE: AVERAGING PITOT TUBE METER - D.P. TRANSMITTER (TYPE APFM-1)
SEE THE FLOW METER SCHEDULE FOR SPECIFIC TECHNICAL REQUIREMENTS.

1. GENERAL:	
PROVIDE AN AVERAGING PITOT TUBE ASSEMBLY COMPLETE WITH ALL AUXILIARY DEVICES WHICH MEETS ALL OF THE SERVICE CONDITIONS, FLOW PARAMETERS AND CALIBRATION REQUIREMENTS AS INDICATED. THE FLOW METER ASSEMBLY MATERIALS OF CONSTRUCTION SHALL BE FULLY COMPATIBLE WITH THE PROCESS FLUIDS AND THE AMBIENT CONDITIONS. PROVIDE ORIFICE SIZE AND D.P. RANGE CALCULATION SHEET.	
2. TECHNICAL:	
PROCESS FLUID:	AS SCHEDULED
MOUNTING:	1” NPT WELD-O-LET
TRANSMITTER:	1. ROSEMOUNT 3051S 2. ENDRESS & HAUSER – PMD70
3. MANUFACTURER:	
A. ROSEMOUNT 485 ANNUBAR	

GENERAL FLOW METER TECHNICAL SPECIFICATION SHEET

FLOW METER TYPE: THERMAL DISPERSION (TYPE TDFM-1)
SEE THE FLOW METER SCHEDULE FOR SPECIFIC TECHNICAL REQUIREMENTS.

1. GENERAL:	
PROVIDE A THERMAL DISPERSION FLOW METER ASSEMBLY COMPLETE WITH ALL AUXILIARY DEVICES, WHICH MEETS ALL OF THE SERVICE CONDITIONS, FLOW PARAMETERS AND CALIBRATION REQUIREMENTS AS INDICATED. THE FLOW METER ASSEMBLY MATERIALS OF CONSTRUCTION SHALL BE FULLY COMPATIBLE WITH THE PROCESS FLUIDS AND THE AMBIENT CONDITIONS. PROVIDE A COMPLETE SPECIFICATION SHEET FOR EACH METER	
2. TECHNICAL:	
PROCESS FLUID:	AS SCHEDULED
METER TYPE:	THERMAL DISPERSION
MOUNTING:	3/4" NPT
PROCESS WETTED PARTS:	316 STAINLESS STEEL
MAXIMUM PRESSURE DROP:	0.1 PSI AT MAXIMUM DESIGN FLOW
ELECTRONICS HOUSINGS:	NEMA 4, FACTORY MUTUAL APPROVAL.
FLOW OUTPUT SIGNAL:	4 TO 20 mADC LINEAR ANALOG RATE IN SCFM.
ACCURACY:	+/- 1% OF FULL SCALE.
REPEATABILITY:	+/- 1% OF FULL SCALE.
CALIBRATED RANGE:	AS SCHEDULED
POWER INPUT:	120 VAC, 60 HZ.
INSERTION LENGTH:	PROVIDE "U" LENGTH (PROCESS CONNECTION TO PROBE TIP) PER MANUFACTURER'S INSTALLATION INSTRUCTIONS.
3. MANUFACTURER:	
A. FLUID COMPONENTS, INC. – MODEL ST98B-CA FLEX MASS	

END OF SECTION

Revision History	
Date	**Rev. No.**
A	0
B	0
C	0
D	0
E	0
F	0
02-19-09	0

AWW/djo [CV,EL,ME]
C:\d\timsdatasf\BROOKHAVEN_NATIONAL_LABORATORY\SF070003\200-PROJEXEC\280-SPEC\13865B1.doc

LEGEND

FLUID UNITS

CA	COMPRESSED AIR	IW	INDUSTRIAL WASTE
CHW	CHILLED WATER	NG	NATURAL GAS
CNW	COOLING WATER/ CONDENSER WATER	NPW	NON POTABLE WATER
		SA	SULFURIC ACID
CTW	COOLING TOWER WATER	ST	STEAM
IA	INSTRUMENT AIR		
HYD	HYDRULIC OIL		

FLOW UNITS

CFH	CUBIC FEET PER HOUR
CFM	CUBIC FEET PER MINUTE
GPM	GALLONS PER MINUTE
LB/HR	POUNDS PER HOUR
ACFH	ACTUAL CUBIC FEET PER HOUR
ACFM	ACTUAL CUBIC FEET PER MINUTE
SCFH	STANDARD CUBIC FEET PER HOUR
SCFM	STANDARD CUBIC FEET PER MINUTE

FLOW METER SCHEDULE

FLOW METER TAG No.	SERVICE	METER SPEC TYPE	LINE SIZE (IN)	MINIMUM METER SIZE (IN)	TEMP. O F	SPECIFIC GRAVITY	FLOW MINIMUM	FLOW MAXIMUM	FLOW UNITS	TRANSMITTER CALIBRATION	REMARKS
FT-691	CHW	APFM-1	8	NA	42	1	-	470	GPM	10 to 600 GPM	
FT-692	CHW	APFM-1	8	NA	42	1	-	470	GPM	10 to 600 GPM	
FT-645	CHL-5 CHW	APFM-1	12	NA	42	1	-	3000	GPM	350 to 3500 GPM	
FT-646	CHL-6 CHW	APFM-1	12	NA	42	1	-	3000	GPM	350 to 3500 GPM	
FT-735	NPW	EMFM-1	4	3	55	1	-	282	GPM	10 to 400 GPM	COOLING TOWER MAKE-UP
FT-736	CNW	EMFM-1	3	2 1/2	95	1	-	90	GPM	10 to 160 GPM	COOLING TOWER BLOW-DOWN
FT-785	IA	TDFM-1	4	-	100	-	-	750	SCFM	10 to 1000 SCFM	

THIS PAGE INTENTIONALLY LEFT BLANK

Tag	Descriptor	Panel Loc.	DI	DO	AI	AO	Dwg #
PCV-504	CHW back pressure control valve	600A				1	601
PDS-703	PCHP8 differential pressure switch	600A	1				601
PDS-704	PCHP9 differential pressure switch	600A	1				601
YC-708	PCHP8 start	600A		1			601
XS-708	PCHP8 Disconnect	600A	1				601
MI-708	PCHP8 run status	600A	1				601
HS-708	PCHP8 HOA in Auto	600A	1				601
YC-709	PCHP9 start	600A		1			601
XS-709	PCHP9 Disconnect	600A	1				601
MI-709	PCHP9 run status	600A	1				601
HS-709	PCHP9 HOA in Auto	600A	1				601
FV-793	PCHP8 control valve	600A		1			601
ZSO-793	PCHP8 control valve limit open	600A	1				601
FV-794	PCHP9 control valve	600A		1			601
ZSO-794	PCHP9 control valve limit open	600A	1				601
PDS-601	CHL5 CH differential pressure sw	600-2	1				603
PDS-602	CHL6 CH differential pressure sw	600-2	1				603
YC-605	CHP5 VFD Start	600-3		1			603
XA-605	CHP5 VFD Fault Status	600-3	1				603
SC-605	CHP5 VFD speed set	600-3				1	603
SI-605	CHP5 VFD Speed Feedback	600-3			1		603
MI-605A	CHP5 VFD Run Status	600-3	1				603
YC-606	CHP6 VFD Start	600-3		1			603
XA-606	CHP6 VFD Fault Status	600-3	1				603
SC-606	CHP6 VFD speed set	600-3				1	603
SI-606	CHP6 VFD Speed Feedback	600-3			1		603
MI-606A	CHP6 VFD Run Status	600-3	1				603
TE-610	CHL5 CHS temperature	600-2			1		603
TE-616	CHL6 CHS temperature	600-2			1		603
PSL-630	CHP5 low suction pressure SW	600-2	1				603
FSL-632	CHP5 CH discharge flow low sw	600-2	1				603
PSL-634	CHP6 low suction pressure SW	600-2	1				603
FSL-636	CHP6 CH discharge flow low sw	600-2	1				603
FT-645	CHP5 CHR flow	600-1N			1		603
FT-646	CHP6 CHR flow	600-1S			1		603
ZSO-649	CHP5 CHR flow valve	600-1N	1				603
ZSC-649	CHP5 CHR flow valve	600-1N	1				603
FV-649	CHP5 CHR flow valve	600-1N		1			603
ZSO-650	CHP6 CHR flow valve	600-1S	1				603
ZSC-650	CHP6 CHR flow valve	600-1S	1				603
FV-650	CHP6 CHR flow valve	600-1S		1			603
TCV-653	CHP5 inlet temperature reg valve	600-1N				1	603
TCV-654	CHP6 inlet temperature reg valve	600-1S				1	603
TE-657	CHP5 Blend Bypass Temperature	600-1N			1		603
TE-658	CHP6 Blend Bypass Temperature	600-1S			1		603
TE-661	CHL5 CHR temperature	600-1N			1		603
TE-662	CHL6 CHR temperature	600-1S			1		603
YC-681	CHL5 Chiller Start	600-2		1			603
XA-681	CHL5 Chiller General alarm	600-2	1				603
TC-681	CHL5 rem evaporator temperature set	600-2				1	603
MI-681	CHL5 Chiller Run Status	600-2	1				603

Tag	Descriptor	Panel Loc.	DI	DO	AI	AO	Dwg #
DL-681	CHL5 Demand Limit	600-2				1	603
YC-682	CHL6 Chiller Start	600-2		1			603
XA-682	CHL6 Chiller General alarm	600-2	1				603
TC-682	CHL6 rem evaporator temperature set	600-2				1	603
MI-682	CHL6 Chiller Run Status	600-2	1				603
DL-682	CHL6 Demand Limit	600-2				1	603
FT-691	CHL5 Blend Recycle Flow	600-1N			1		603
FT-692	CHL6 Blend Recycle Flow	600-1S			1		603
ZSB2-705	CHL5 flow reversing valve Reverse Flow	600-1N	1				604
ZSB1-705	CHL5 flow reversing valve Normal Flow	600-1N	1				604
ZSA2-705	CHL5 flow reversing valve Rotation Malfunction	600-1N	1				604
FV-705	CHL5 flow reversing valve	600-1N		1			604
ZSB2-706	CHL6 flow reversing valve Reverse Flow	600-1S	1				604
ZSB1-706	CHL6 flow reversing valve Normal Flow	600-1S	1				604
ZSA2-706	CHL6 flow reversing valve Rotation Malfunction	600-1S	1				604
FV-706	CHL6 flow reversing valve	600-1S		1			604
PT-712	CWS pump disch header pressure	600-1N			1		604
YCO-714	Cooling twr bypass motrzd. valve - Open	600-1N		1			604
YCC-714	Cooling twr bypass motrzd. valve - Close	600-1N		1			604
XS-714	Cooling twr bypass motrzd. Valve Disconnect	600-1N	1				604
ZSO-714	Cooling twr bypass motrzd. valve	600-1N	1				604
ZSC-714	Cooling twr bypass motrzd. valve	600-1N	1				604
YCO-715	Cooling twr 5 isolation/inlet motrzd. valve Open	600-1N		1			604
YCC-715	Cooling twr 5 isolation/inlet motrzd. valve Close	600-1N		1			604
XS-715	Cooling twr 5 isolation/inlet motrzd. Valve Disconne	600-1N	1				604
ZSO-715	Cooling twr 5 isolation/inlet motrzd. valve	600-1N	1				604
ZSC-715	Cooling twr 5 isolation/inlet motrzd. valve	600-1N	1				604
YCO-716	Cooling twr 6 isolation/inlet motrzd. valve Open	600-1S		1			604
YCC-716	Cooling twr 6 isolation/inlet motrzd. valve Close	600-1S		1			604
XS-716	Cooling twr 6 isolation/inlet motrzd. Valve Disconne	600-1S	1				604
ZSO-716	Cooling twr 6 isolation/inlet motrzd. valve	600-1S	1				604
ZSC-716	Cooling twr 6 isolation/inlet motrzd. valve	600-1S	1				604
TE-724	CWS pump supply header temperature	600-1N			1		604
PT-725	CWS pump supply header pressure	600-1N			1		604
JS-726	Cooling tower 5 sump heater	600-3		1			604
JS-727	Cooling tower 6 sump heater	600-3		1			604
YC-729	CH5 Condenser Pump VFD Start	600-3		1			604
XA-729	CH5 Condenser Pump VFD Fault Status	600-3	1				604
SC-729	CH5 Condenser Pump VFD speed set	600-3				1	604
SI-729	CH5 Condenser Pump VFD Speed Feedback	600-3			1		604
MI-729A	CH5 Condenser Pump VFD Run Status	600-3	1				604
YC-730	CH6 Condenser Pump VFD Start	600-3		1			604
XA-730	CH6 Condenser Pump VFD Fault Status	600-3	1				604
SC-730	CH6 Condenser Pump VFD speed set	600-3				1	604
SI-730	CH6 Condenser Pump VFD Speed Feedback	600-3			1		604
MI-730A	CH6 Condenser Pump VFD Run Status	600-3	1				604
CV-731	Cooling tower water blowdown valve	600-1S		1			604
ZSO-731	Cooling tower water blowdown valve	600-1S	1				604
ZSC-731	Cooling tower water blowdown valve	600-1S	1				604
YI-731	Cooling tower water blowdown valve	600-1S	1				604
ZSO-732	CWP5 CHR flow valve	600-1N	1				604

Tag	Descriptor	Panel Loc.	DI	DO	AI	AO	Dwg #
ZSC-732	CWP5 CHR flow valve	600-1N	1				604
FV-732	CWP5 CHR flow valve	600-1N		1			604
ZSO-733	CWP6 CHR flow valve	600-1S	1				604
ZSC-733	CWP6 CHR flow valve	600-1S	1				604
FV-733	CWP6 CHR flow valve	600-1S		1			604
FV-734	Condenser Water Make-up Valve	600-1S		1			604
ZSO-734	Condenser Water Make-up Valve Open	600-1S	1				604
ZSC-734	Condenser Water Make-up Valve Close	600-1S	1				604
AT-739	Condenser Water Conductivity	600-1S			1		604
TE-741	CHL5 CWR temperature	600-1N			1		604
TE-743	CHL5 CWS temperature	600-1N			1		604
PDS-744	CHL5 COW differential pressure sw	600-2	1				604
TE-746	CHL6 CWS temperature	600-1S			1		604
TE-747	CHL6 CWR temperature	600-1S			1		604
PDS-749	CHL6 COW differential pressure sw	600-2	1				604
LT-762	Cooling tower basin level	600-1N			1		604
LS-763	Cooling tower basin point levels	600-1N	5				604
PSL-768	CWP5 low suction pressure SW	600-1N	1				604
PSL-769	CWP6 low suction pressure SW	600-1S	1				604
YCF-772	Cooling tower 5 VFD Start Forward	600-3		1			604
YCR-772	Cooling tower 5 VFD Start Reverse	600-3		1			604
XA-772	Cooling tower 5 VFD Fault	600-3	1				604
SC-772	Cooling tower 5 VFD speed set	600-3				1	604
SI-772	Cooling Tower 5 VFD Speed Feedback	600-3			1		604
MI-772A	Cooling tower 5 VFD Run Status	600-3	1				604
YCF-773	Cooling tower 6 VFD Start Forward	600-3		1			604
YCR-773	Cooling tower 6 VFD Start Reverse	600-3		1			604
XA-773	Cooling tower 6 VFD Fault	600-3	1				604
SC-773	Cooling tower 6 VFD speed set	600-3				1	604
SI-773	Cooling Tower 6 VFD Speed Feedback	600-3			1		604
MI-773A	Cooling tower 6 VFD Run Status	600-3	1				604
YS-778	Cooling tower 5 Fan Vibration	600-1N	1				604
YS-779	Cooling tower 6 Fan Vibration	600-1S	1				604
YCO-800	Cooling twr 5 sump drain valve Open	600-1N		1			604
YCC-800	Cooling twr 5 sump drain valve Close	600-1N		1			604
ZSO-800	Cooling twr 5 sump drain valve open	600-1N	1				604
ZSC-800	Cooling twr 5 sump drain valve closed	600-1N	1				604
YCO-801	Cooling twr 6 sump drain valve Open	600-1S		1			604
YCC-801	Cooling twr 6 sump drain valve Close	600-1S		1			604
ZSO-801	Cooling twr 6 sump drain valve open	600-1S	1				604
ZSC-801	Cooling twr 6 sump drain valve closed	600-1S	1				604
FT-735A	Condenser Water Make-up Flow - Analog	600-1S			1		604
FC-735A	CW Make-Up Flow To Chemical Treatment - Analo	600-1S				1	604
FC-735B	CW Make-Up Flow To Chemical Treatment Pulse	600-1S		1			604
FT-736A	Blow-Down Flow - Analog	600-1S			1		604
TE-780	Air compressor 3 CWR temperature	600-2			1		605
YC-781	Air compressor 3 Start	600-2		1			605
XA-781	Air compressor 3 general alarm	600-2	1				605
MI-781	Air compressor 3 Run Status	600-2	1				605
TE-782	Air Dryer 3 CHR temperature	600-2			1		605
YC-783	Air dryer 3 Start	600-2		1			605

Tag	Descriptor	Panel Loc.	DI	DO	AI	AO	Dwg #
XA-783	Air dryer 3 general alarm	600-2	1				605
MI-783	Air dryer 3 Run Status	600-2	1				605
PT-784	Instrument Air Receiver 2 Pressure	600-2			1		605
FT-785	Instrument Air Flow (main 6" header)	600-2			1		605
PDT-786	Instrument Air Filter differential pressure	600-2			1		605
PT-787	Instrument Air pressure	600-2			1		605
TV-788	Air compressor chilled water temperature control	600-2				1	605
PDS-789	Air compressor chilled water differential pressure	600-2	1				605
MI-729B	CH5 Condenser Pump VFD Bypass Running	600-3	1				604
MI-730B	CH6 Condenser Pump VFD Bypass Running	600-3	1				604
MI-772A	Cooling tower 5 VFD Bypass Running	600-3	1				604
MI-773B	Cooling tower 6 VFD Bypass Running	600-3	1				604
MI-605B	CHP5 VFD Bypass Running	600-3	1				603
MI-606B	CHP6 VFD Bypass Running	600-3	1				603
FV-790	Air compressor chilled water isolation	600-2		1			605
ZSO-790	Air compressor chilled water isolation	600-2	1				605
ZSC-790	Air compressor chilled water isolation	600-2	1				605
FV-777	IAC dryer chilled water isolation	600-2		1			605
ZSO-777	IAC dryer chilled water isolation	600-2	1				605
ZSC-777	IAC dryer chilled water isolation	600-2	1				605

Totals:		84	37	33	14	

SECTION 13870

REFRIGERANT GAS DETECTION SYSTEM

PART 1 GENERAL

1.1 SUMMARY

A. Scope
1. Gas Detection System indicated on Drawings shows basic requirements; however, it is required by this Section or other Sections referencing “Refrigerant Gas Detection System”.
2. Types of items specified in this Section include the following:
3. Turnkey Refrigerant Gas Detection System Design and Installation.
4. Control Panel, Field Sensors and Devices.
5. Fire Marshal Approval.
6. Start Up, Calibration, and Warranty Period Service.
7. Provide labor, materials, and equipment as specified and as indicated on DRAWINGS, including accessories as required by manufacturer for fully operational installation.
8. All installation work provided shall be per the recommendations of the equipment manufacturers and as required by the manufacturer’s installation instructions and shop drawings.
9. Refer to SECTION 13855 and 13856 for additional control systems equipment requirements.
10. Note, the owner shall provide SUBA equipment for this system.

1.2 RELATED WORK SPECIFIED UNDER OTHER SECTIONS

A. Drawings and general provisions of Contract, including General and Supplementary Conditions and Division -1 Specification Sections, apply to this Section.

B. Related Specification Sections: The following Sections contain requirements that relate to this Section:
1. Division 13 “Instrumentation and Control” Sections.
2. Division 15 Section “Basic Mechanical Requirements”.
3. Division 15 Section “Centrifugal Water Chillers”.
4. Division 16 Sections.

1.3 QUALITY ASSURANCE

A. Codes, Standards, Permits:
1. Applicable Codes. Refrigerant Gas Detection System shall be designated Fire Protection System as defined by Building Code of New York State (BCNYS), Chapter 9 - Section 908; Emergency Alarm Systems. System shall also be in accordance with New York Fire Code, Chapter 9 - Section 908; Emergency Alarm Systems. System shall also meet or exceed the latest applicable Building Code of New York State, New York Mechanical Code, New York Fire Code, NFPA, NGDA, ASHRAE 15 Standard 2003, and EPA

standard CFR and as designed herein. System shall incorporate latest revisions to bring up to current State of Indiana standards

2. Permits. Provide all building fire inspection and electrical installation permits from local municipal Fire Inspector and Electrical Inspector. Permits shall be in accordance with New York Fire Code Section 105.

B. System Supplier Qualifications:
   1. Supplier. Supplier shall be a firm regularly engaged in supplying turnkey, Building Code of New York State compliant, Hazardous Material Emergency Alarm Systems; including Refrigerant Gas Detection Systems. Provide proof of last three (3) Fire Marshal Approved Refrigerant Gas Monitoring Systems.
   2. Performance Specification and Liability. Complete code compliant system design details are not shown in bid package drawings. Specification provided is a performance specification. Supplier shall have full turnkey liability and responsibility for proper building code compliant design, approval and installation of refrigerant gas detection and emergency alarm system.

C. Provide per SECTION 13855.

1.4 SUBMITTALS; FIRE MARSHAL AND ENGINEER OF RECORD

A. General:
   1. Provide submittal information to Fire Marshal and Engineering Firm of record according to following defined schedule:

Order	Submit To:	Content:	Purpose:
1st	Engineering Firm of Record	1. Product Data Information 2. General System Layout	For approval of specified components and for approval of system design concept
2nd	Authority Having Jurisdiction (AHJ) – in most cases this will be local municipal Fire Marshal	1. Approved product and general system layout submittal 2. Entire balance of AHJ submittal package as defined by BCNYS	Fire Marshal System Approval
3rd	Engineering Firm of Record	1. Three (3) entire copies of AHJ approved submittal	This must be done prior to final installation of the system

   2. Submit each item in this Article according to requirements of local State Building Code and Conditions of Contract and Division 1 Specification Sections.

B. Information Required for Engineering Firm of Record Submittal / Approval Package.
   1. Product Data Information: Submit manufacturer's product technical data information for all system components; highlighted specific data is required.

2. General System Layout: Submit general system layout on AutoCAD Drawings including all device locations, device identification numbers along with sequence of operation, system interlock details for interface to fire alarm system and building automation system.

C. Information Required for AHJ / Fire Marshal Submittal / Approval Package.
   1. Construction Documents: Submit construction documents including information specified in accordance with Building Code of New York State 2003 Section 106, Section 414, Chapter 9, and New York Fire Code 2003 Section 105.4, Section 606, Chapter 9, Section 907, 908; including, but not limited to:
      a. BCNYS 2003 106.1.1 Information on Construction Documents.
      b. BCNYS 2003 106.1.1.1 Fire Protection System Shop Drawings.
      c. BCNYS 2003 106.3.4 Design Professional in Responsible Charge.
      d. Detailed emergency power battery back up calculations for standby and alarm conditions.
   2. Wiring Diagrams: Submit system wiring diagrams differentiating between factory and field installed wiring. Include diagrams for equipment and for system with all terminals and interconnections identified. Indicate components for both field and factory wiring. Include control panel wiring details.
   3. Piping Diagrams: Submit system piping diagrams differentiating between factory and field installed piping. Include diagrams for equipment and for system with all interconnections identified. Indicate components for both field and factory piping. Piping riser details shall be supplied.
   4. Code Compliance Documentation: Submit code compliance documentation itemizing all building code references for design justification. Include Code Compliant Hazard Evaluation forms filled in for each zone monitored.

D. Provide per SECTION 13855.

PART 2 PRODUCTS

2.1 SAFETY SYSTEM SUPPLIER

A. Provide TURNKEY refrigerant monitoring system; including: Fire Marshal approval package with Professional Engineer sealed drawings, fabrication, permits, installation, supervision, Fire Marshal acceptance testing, commissioning, warranty period service and owner training for system specified from one of the following:
   1. Refrigerant Monitoring System Supplier Requirements. Suppliers shall include documentation demonstrating previous supplied “Approved by Fire Marshal” Building Code of New York State “Code Compliant” refrigerant monitoring systems. Documentation to include sample “Approved” copies of Airflow Profile Reports and “Approved” Hazard Evaluation Forms with related Approved Drawings. Certification shall be in compliance with NFPA 72 standard for design, field technician and installation.

B. Subject to compliance with requirements, provide refrigerant gas detection analyzer components from one of following:
   1. Dräger Safety

2. Mine Safety Appliance
3. Honeywell Analytics

C. Deviations from Specification
1. Deviation from specified products or qualifications must be clearly spelled out and itemized by specification, section and number, clearly described in detail as to specific deviation, reason for deviation, benefit derived to Owner from deviation, and must be approved prior to receipt of contractors bid proposal.

2.2 GENERAL

A. Refrigerant Monitoring System. Refrigerant monitoring system design and provision related to machinery rooms, industrial occupancies and refrigerated rooms for manufacturing, research and development, food and beverage preparation, other processes and storage shall be in accordance with applicable code sections referring to mechanical refrigeration, refrigeration, emergency and standby power systems, emergency alarm systems, hazardous materials – general provisions governed by Building Code of New York State (BCNYS), New York Fire Code (NYFC) and New York Mechanical Code (NYMC) and others as defined elsewhere in this specification.

B. System shall provide a series of detection points located in areas where refrigerant from a leak is likely to accumulate and / or be sensed. Include infrared sensor(s), analyzer, sequencer and interface control panels(s), filters, sensors, alarm signaling devices, piping and all components necessary for a complete operational system.

C. System shall provide various stages of alarming and control chiller room mechanical ventilation in accordance with sequence of operation at values not to exceed Threshold Limit Values (TLV's) specified by New York Mechanical Code. System shall be capable of detecting, indicating, alarming, shutting down equipment, interfacing to building automation, fire and security systems, as specified below, on contract documents, and per applicable codes, standards, and regulations.

D. Under circumstances directed by regulations for mechanical equipment room design, refrigerants requiring LEL monitoring below 4% by volume, shall employ appropriate sensing technology and conform to Class 1, Division 2, National Electrical Code requirements. When refrigerant groups A2, A3, B2 other than NH3, and B3 are used, follow appropriate guidelines indicated in regulations concerning area classification and equipment requirements.

E. Monitoring shall be employed to provide minimum two (2) points of area sampling per chiller unless airflow profile test justifies alternative sensor quantity and location. Airflow profile testing shall be accomplished in accordance with NFPA / NGDA approved smoke testing methods. Monitoring shall be provided for pit or grated floor basement areas located in chiller mechanical room. System design considerations shall incorporate leak detection monitoring sensing locations for early warning indication to prevent a major loss of refrigerant and to minimize owners risk to EPA mandated accidental refrigerant release fines and penalties. Where multiple refrigerant types are used, it is system supplier's responsibility to properly select quantity and type of refrigerant detectors required to safely monitor equipment room.

Provide components and system safety and interface logic as outlined following without exception. Provide expansion capability to handle additional 20% sample point capacity.

F. Refrigerants shall be classified in accordance with ASHRAE 34 and New York Mechanical Code. For refrigerant blends assigned dual classifications, as formulated and for the worst case of fractionation, the classification for the worst case of fractionation shall be used.

G. System classification. Refrigeration systems shall be classified according to degree of probability that refrigerant leaked from failed connection, seal or component could enter an occupied area. Distinction is based on basic design or location of components.
   1. Low-probability systems. Double-indirect open-spray systems, indirect closed systems and indirect-vented closed systems shall be classified as low-probability systems, provided all refrigerant-containing piping and fittings are isolated when quantities in code are exceeded.
   2. High-probability systems. Direct systems and indirect open-spray systems shall be classified as high-probability systems.

H. Refrigerant detector. Provide refrigerant detector with an audible and visual alarm inside refrigerating machinery room and outside each entrance to refrigerating machinery room or zone. Detector, or sampling tube that draws air to detector, shall be located in area where refrigerant from leak will concentrate. Alarm shall be actuated at a value not greater than corresponding TLV-TWA values shown in New York Mechanical Code for refrigerant classification. Alarms shall be manual reset. Detectors and alarms shall be placed in approved locations. Description of each alarm shall be clearly marked by signage near annunciators. Visual display of refrigerant concentration shall be located outside of area being monitored. Detectors are not required for ammonia systems when machinery room complies with New York Mechanical Code.

I. Protection from refrigerant decomposition. Where any device having an open flame or surface temperature greater than 800 degrees F, is used in a room containing more than 6.6 pounds of refrigerant in an independent circuit, a refrigerant detector shall be used to automatically shut off the combustion process in the event of a refrigerant leak.

J. Ventilation Interface. Upon actuation of refrigerant detector at danger level conditions, mechanical ventilation system shall be energized and exhaust air from machinery room per Building Code of New York State.

K. Machinery room special requirements. Group A2, B2, A3 and B3 refrigerants shall also comply with following.
   1. Ammonia room ventilation. Ventilation systems in ammonia machinery rooms shall operate continuously except when machinery rooms are equipped with vapor detector that will automatically start ventilation system and actuate alarm at detection level not to exceed 1,000 ppm or other as specified by code.
   2. Where quantity of any Group A2, B2, A3 or B3 refrigerant in a single independent circuit would exceed 25 percent of lower flammability limit (LFL) upon release to space, all

electrical equipment and appliances shall conform to Class 1, Division 2, hazardous location classification requirements of NFPA 70.

3. Remote controls. Remote control of mechanical equipment and appliances located in machinery room shall be provided at an approved location immediately outside machinery room and adjacent to its principal entrance.

L. Ventilation system. A clearly identified switch of break-glass type shall provide on-only control of machinery room ventilation fans.

M. Emergency control box. Emergency control boxes shall be provided for refrigeration systems required to be equipped with a treatment system, flaring system or ammonia diffusion system. See code for location, construction, operational and identification procedures.

N. Alarm and detection systems required shall be supervised by a central, proprietary or remote station service or shall initiate an audible and visual signal at a constantly attended on-site location as defined by AHJ. This contractor shall provide and install electrical wire and conduit to fire alarm control panel for interlocks required by AHJ. Approved fire alarm contractor to supply necessary fire alarm panel hardware for interlocks, fire system programming, landing of interlock wires, commissioning assistance, etc. as required making a complete operating system.

2.3 CONTROL PANEL AND CONTROL PANEL EQUIPMENT

A. Main Refrigerant Gas Detection Control Panel: Panel location as shown on contract documents. Provide wall mount, NEMA 12 enclosure painted safety blue. Panel shall include refrigerant gas detection controller having ability to provide TCP/IP communication to transmit data to owner.

B. System shall be configured to provide additional dry contact alarm contacts and output signals for control or for interface as follows, noted on drawings and specified in the code:
   1. Interface to 24 hour supervised area through Fire Alarm Control Panel (FACP). Include contacts for interface as supervisory alarms, trouble alarms and fire alarms.
   2. Building management system Maintenance dry alarm status contacts, Warning level alarm (first level) contact, Danger level alarm (TLV - TWA level) alarm (second level) contact.
   3. Direct interlock to Purge Air Supply and Exhaust Fan starter control circuit. Purge Mode.
   4. Direct interlock to Purge Mode damper controls.
   5. Direct interlock to shut down combustion equipment located in chiller room.

C. Alarms shall be provided as follows: At warning level (25 ppm or 30% of TLV-TWA level, whichever is greater), system shall actuate warning amber beacon and audible horn. At TLV-TWA level, system shall activate purge ventilation system, energize red beacon, sound refrigerant leak audible alarm and shut down area combustion equipment. If system malfunction occurs, blue beacon and audible alarm shall energize at control panel. Provide dry alarm contacts for each alarm level for interface to BMS and FACP. All control system interlocks and logic shall be provided in control panel. Where indicated; third level contacts shall be used to initiate area ventilation prior to TLV level to prevent shutdown of combustion equipment. Analyzer display shall indicate which channel is in alarm.

D. Fire Alarm Control Panel interface shall be as defined or other based on AHJ direction. Warning level alarm dry contact for Fire Alarm Supervisory input, danger level alarm dry contact for Fire Alarm Supervisory input, and malfunction (trouble) alarm dry contact for Trouble input. This contractor shall install conduit and wire to FACP; fire alarm system hardware, programming, and electrical termination shall be by fire alarm contractor.

E. Purge Ventilation. Upon system reset, alarm beacons shall be deactivated only if area monitored has returned to safe condition. Purge ventilation system shall remain activated for 30 minutes after alarm condition has cleared. Panel indication shall denote purge ventilation system is still activated. Provide functionality for "Auto - Manual On" purge fan control

F. Alarm Reset. Provide alarm reset function at control panel to acknowledge and silence or reset self-latching alarm circuit. Alarm beacons and horns shall remain on until system is reset from panel face or from remote reset pushbutton. Alarms shall stay latched to prevent them from automatically resetting when alarm condition goes away.

G. Alarm Test. Provide alarm test function at control panel to test alarm annunciation functionality. During test, output signals to FMS, FACP, and combustion shutdown shall be disabled.

H. Trouble Relay. Provide malfunction relay outputs as required for system interface to FACP and FMS. Relay(s) shall be energized in normal operation, de-energized due to malfunction at any channel nor for other situations indicating Trouble; i.e. loss of power, loss of sample draw flow, sensor malfunction, etc.

I. Panel Face Indication. Provide indication at control panel for power on, zone alarm status, alarm status for relief vent alarms (where applicable) and purge fan status.

J. Power Supply. Provide terminals for dedicated 115 VAC, 60 Hz. input power supply. Power all alarm warning devices and system components from this panel circuit. All remote field devices associated with this system shall be 120 VAC or as indicated.

K. Battery Back Up System. Provide battery back up system to meet Building Code of New York State requirements for emergency alarm systems back up power supply system; include sizing for load with duration of back up per code. Provide load calculation information in submittal data and for permanent site records. Interface power loss status contacts to fire alarm system per building code requirements.

2.4 FIELD DEVICES AND MISCELLANEOUS.

A. Diffusion Refrigerant PPM Sensors. Provide NEMA 4X water and corrosion resistant plastic enclosure, photoacoustic infrared sensor technology in wall mount enclosure. Sensor to be mounted on strut type steel channel at each chiller as noted above and in drawings. Sensor shall provide 50% step change response in <70 seconds and T90 response >2.5 minutes and <4 minutes. Sensor shall be compound specific and calibrated for refrigerant as required per chiller manufacturer's requirement. Sensor full range shall be 0-1000 PPM with 4-20 mADC non-isolated, sourcing output and RS-485 Modbus RTU as standard. Sensor power shall be

24V DC/AC standard with 110/220 VAC optional. Accuracy shall be 20-100 ppm +/-5ppm and 100-1000 ppm +/-6%. Repeatability shall be +/-5 ppm full scale. Sensor low level detection shall be 20 ppm. Operating temperature range of 32 to 104 degrees F. Optional strip heater shall be available to extend temperature range. Humidity range shall be 0-95% RH non-condensing. Device shall be capable of sensing for R11, R12, R22, R123, or R134a. Analyzer shall have capability to be switched to monitor, at a future date, another refrigerant type by changing one part and recalibration. Sensor shall have UL31010-1 and Canadian CAN/CSA-C22.2 Fire and Shock approvals. Sensor warranty shall be 24 months from date of installation or 30 months from date of shipment to jobsite. Electrochemical doped metal oxide sensing technology employing short-term life sensors, which deplete as a normal part of their operation or storage shelf life, shall not be acceptable. Sensor shall be mounted at 12” above finished floor. Provide SafeAir, Dräger Safety, O.I. Analytical or MSA.

B. Air Flow Switch; AFS. Provide general-purpose airflow switch to verify purge ventilation fan operation, differential type, as required for monitoring of area continuous and intermittent exhaust fans. Provide fan status indication at control panel.

C. Alarm Horns and Beacons. Provide stackable beacon assembly equal to Federal Signal / Edwards Triliptical / Allen Bradley; incandescent style, inside and outside of each area being monitored and at each entrance into monitored area. Provide Edwards horn assembly or equal rated per Building Code of New York State for db levels present; volume level shall be adjustable. Beacon and horns shall be general purpose, NEMA 4 for outdoors, Class 1, Div. 1 rated explosion proof as required; red, amber and blue. Outdoor strobes shall be visible in daylight conditions. All remote visual and audible devices shall be 120 VAC and powered from main control panel and emergency back up power source. Beacons and horns in occupied general-purpose areas exposed to general public shall be decorative, flush wall mount type, with High Intensity LED and decorative finish. Beacons shall be viewable throughout area being monitored.

D. Warning Signs and Tagging. Provide "Lamacoid" sign, red background with 1" high white letters at each remote visual and audible device. Anchor sign to wall adjacent to wall mounted devices, suspend with brass security chain adjacent to ceiling mounted devices.

E. Signs located inside and outside mechanical room shall be inscribed as follows:
   1. RED – DANGER LEVEL / R -_____
   2. AMBER – WARNING LEVEL / R -_____
   3. BLUE – MALFUNCTION

F. Signs located at each entrance to mechanical room shall be inscribed as follows:
   1. UPON REFRIGERANT ALARM / UNSAFE TO ENTER ROOM WITHOUT PROPER BREATHING APPARATUS.

G. Remote Reset. Provide minimum (1) remote reset pushbutton assembly at or near main entrance to mechanical room and additional where indicated on drawings to allow reset / silence from safe location. Remote pushbutton station shall be compatible with room decor. Signs at remote reset assembly shall denote "safe and unsafe" response action relating to local beacons

and entrance to monitored area upon depressing remote reset pushbutton. Upon reset, if area monitored has been purged to safe level, beacons shall be deactivated and safe entry shall be permitted.

H. Owner shall provide SCBA equipment for this system.

I. Provide "Lamicoid" tag above carrying case, yellow background with 3" high black letters inscribed: SELF CONTAINED BREATHING APPARATUS.

2.5 CALIBRATION GAS AND HARDWARE

A. Provide all necessary calibration gas and hardware for two years operation in a portable case. Turn over to owner after successful system start up.

PART 3 EXECUTION

3.1 INSTALLATION

A. Electrical Installation. Contractor shall provide for necessary installation permits. Install control panels and electrical field devices in accordance with applicable codes and manufacturer's printed instructions. Install conduit and wire for all interlocks to each remote system. Make final electrical terminations. Installer must be familiar with division 16 installation practices and applicable code requirements for installation of emergency alarm systems.

B. Install equipment in accordance with applicable codes and manufacturer's printed instructions.

C. Route conduits and tubing as required making neat and operating system.

3.2 TESTING AND ACCEPTANCE

A. General:
   1. Prior to project completion and when directed by Owner's Representative, manufacturers factory trained representative shall program, start up, thoroughly test and calibrate, set alarm threshold levels, and verify system operation to be in compliance with approved sequence of operation and code requirements. Should corrections be required, and after corrections have been completed, system shall be re-tested.
   2. Fire Marshal Acceptance Testing. Prior to receipt of certificate of occupancy from local Fire Marshal, Fire Marshal acceptance testing shall be performed. Contractor shall provide operational performance testing for Fire Marshal and owner representative. Contactor shall provide all necessary test gas, a minimum of two alarm system personnel, a pair of two-way radios and all necessary equipment to provide complete testing of each alarm system device and system interlock. Acceptance testing shall also include Gas Leak Simulation Test that emulates actual properties of hazards present to prove gas leak will come into contact with proposed sensor locations under actual ventilation conditions. Local AHJ, Fire Marshall and owner representative to witness test and sign off.

3. Provide training of Owner personnel on both system operation and routine maintenance procedures. Training shall be provided for all devices in the system outlined above. Provide three (3) complete operations and maintenance manuals in 3-ring binders, including parts list and as-built drawings. Documentation to be maintained on site for AHJ review per code requirements.
4. Permanent Site Records. After system acceptance, provide building safety manager with "Permanent Site Records Manual" for this system to be maintained on site for Fire Department/ Fire Marshall accessibility. Include Fire Marshal approved system design information as detailed above including; "As Built" system drawings, calibration reports, annual inspection reports, service records, emergency power system load calculation data, ventilation airflow profile testing data, code compliant system design data and justification information, code references, sequence of operation, etc. and any additional information as required by AHJ.

B. Code Compliance Certification:
1. Contractor shall provide Owner and Municipality with a certified document stating that alarm systems are installed in compliance with all MBC/IFC and NFPA codes and standards and that all required acceptance tests have been completed. Mount approved inspection certificate at main control panel location.

C. As Built Drawings:
1. Deviations from original shop and installation submittal drawings shall be corrected and submitted in operations and maintenance manuals as "As Built" drawings.
2. As-built alarm shop drawings shall be submitted for final review of AHJ / Fire Marshall. All field changes shall be shown on as-built drawings.

3.3 INSPECTION AND SERVICING

A. On Site Service:
1. Each three (3) months (quarterly) after final acceptance, until warranty expires, systematically inspect, examine, clean, calibrate and adjust detector, panels, relays, self-contained breathing apparatus, and accessories pertaining to system. Provide updated reports for owner permanent site records.
2. Annual System Inspection and Certification. During the warranty period, provide required annual certification inspection and operation testing. Mount updated approved certificate at main control panel location. Include, but not limited to, emergency power supply testing, ventilation interlock operation, interlocks to 24 hour supervised station, alarm signaling device operation, etc. and all interface operation as required per governing code. Provide updated certification reports to owner and municipal AHJ.
3. Near end of warranty period of operation, provide similar service as described above complete with written report. Should a control or device be suspect in its operation or function, this deficiency shall be reported to operating personnel, documented in report and replaced.

4. System shall be provided with a two (2) year warranty and all applicable recommended spare and consumable parts for two (2) years of operation.

END OF SECTION

Revision History	
Date	**Rev. No.**
C	0
E	0
F	0
02-19-09	0

AWW/djo
C:\d\timsdatasf\BROOKHAVEN_NATIONAL_LABORATORY\SF070003\200-PROJEXEC\280-SPEC\13870.doc

THIS PAGE INTENTIONALLY LEFT BLANK

SECTION 13875

I&C SYSTEMS START-UP AND FINAL ACCEPTANCE TESTING

PART 1 2. AND 3. COMBINED

1.1 SUMMARY

A. Scope

1. Provide all labor and materials necessary to conduct the systems' start-up and final acceptance testing of all monitoring and control systems as specified herein.
2. Satisfactory completion of systems' start-up and testing specified herein is an absolute prerequisite to final acceptance of completed WORK by the Consultant and BNL.
3. This SECTION presupposes satisfactory completion of component and subsystem tests as defined in preliminary testing described in Article "RELATED WORK PERFORMED UNDER THIS CONTRACT".
4. Develop and submit to the Consultant and BNL, for approval, a complete schedule for systems' start-up, and detailed operating test procedures for each system specified. Procedures shall contain step by step operations and shall include all required spaces to enter measured or observed data which, taken as a whole, will verify proper system operation. Items to be measured or observed shall be specifically indicated and the anticipated results listed. Include all points of interface with other contracts and coordinate scheduling effort with Consultant and BNL to properly interface with commissioning WORK.
5. Procedures shall include data sheets which contain all data and operating verification of component and subsystem tests performed prior to final acceptance testing.
6. Provide system start-up and final acceptance testing for the following systems:
   a. Refrigerant Monitoring System
   b. ACU-2
   c. AHU-3
   d. AHU-4
7. It is the intent of this SECTION to place full instrumentation and control systems' start-up and systems' acceptance testing responsibility on the I & C CONTRACTOR. Where the term interfacing is indicated and the I & C CONTRACT includes the control and/or monitoring of packaged equipment or systems provided under other contracts, it is the intent that the I & C CONTRACTOR shall be responsible for proper interfacing during the start-up and commissioning of those systems. The interfacing work includes providing of detailed operating test procedures for all control and monitoring functions provided, to coordinate the procedures with the system contractors, and assist as required during start up and commissioning to demonstrate proper monitoring and control functions.
8. Start-up and acceptance testing procedures written to interface with systems provided under other contracts shall be written in close cooperation with the system supplier as coordinated through the Consultant and BNL.

B. Related Work Specified In Other Sections
   1. Instrumentation and Control Systems - General - SECTION 13855.
   2. Instrumentation and Control Systems - Electrical Work - SECTION 13856.

C. Related Work Performed Under This Contract
   1. Preliminary testing is defined as the completion of tests required by other sections of the specifications to ascertain that equipment and component parts are functioning properly.
   2. Where package systems provided under this CONTRACT, or systems provided under other contracts have been specified, preliminary testing shall mean the testing of the system in the local and automatic control mode as far as practical to ascertain that all individual components, indicated interfaces and the system as a whole, performs properly. Preliminary testing shall be the responsibility of the installing contractor. Designated package equipment/systems are as follows:

1.2 START-UP AND TESTING PROCEDURE

A. Before proceeding with any system start-up and testing, submit a start-up procedure for approval by the Consultant and BNL, and confirm that preliminary testing has taken place and equipment/system is ready for automatic operation. Detailed factory and field test procedures shall be submitted for approval at least 30 days before the actual testing begins.

B. All systems' start-up and final testing shall be coordinated with the Consultant and BNL'S approval, and shall take place in the presence of the Consultant and BNL.

C. Conduct and/or assist in the systems' start-up and final testing as per approved start-up procedures. Make available, to all parties required to be present for the start-up, copies of the approved start-up procedure.

D. Closely coordinate with the various equipment/system contractors, and the Consultant and BNL during the scheduling phase and provide all necessary manpower to properly execute the systems' start up and acceptance testing of the systems.

1.3 TEST RECORDS AND ACCEPTANCE

A. Provide completed test procedures with all recorded and observed data entered, and attach, thereto, a written certification that all testing has taken place for the specified system and that it has been demonstrated that the system has operated through its full range of automatic controls with satisfactory results.

B. Provide to Consultant and BNL, as required, a written report of any equipment or components failure or malfunction which has adversely affected the start-up and testing procedures. Any additional costs for the rescheduling, start-up, and testing of postponed or aborted start-up and final testing procedures shall be the responsibility of the Contractor responsible for the equipment. Responsibility shall be determined by the Consultant and BNL.

C. Where, in the judgement of the Consultant and BNL, the submitted records do not document satisfactory completion of the specified tests, the Consultant and BNL will identify in writing

the deficient systems, subsystems, and components together with the appropriate references to the requirements of the CONTRACT DOCUMENTS substantiating the deficiencies. Deficiencies so identified shall be corrected and the affected systems retested before satisfactory completion will be acknowledged.

END OF SECTION

Revision History	
Date	**Rev. No.**
A	0
B	0
C	0
D	0
E	0
F	0
02-19-09	0

AWW/djo
C:\d\timsdatasf\BROOKHAVEN_NATIONAL_LABORATORY\SF070003\200-PROJEXEC\280-SPEC\13875.doc

THIS PAGE INTENTIONALLY LEFT BLANK

SECTION 15050

GENERAL MECHANICAL REQUIREMENTS

PART 1 GENERAL

1.1 SCOPE

A. Work Specified In This Section
   1. This SECTION includes GENERAL MECHANICAL REQUIREMENTS applicable to the WORK.
   2. ELECTRICAL WORK, except as otherwise specified or indicated, shall be provided as part of WORK under Division 16 Sections.
   3. INSTRUMENT AND CONTROL WORK, except as otherwise specified or indicated, shall be provided as part of WORK under Division 13 Sections.
   4. Provide, as part of the WORK under Division 15 and referencing Sections, Electrical WORK necessary for the operation of a component, assembly, package or system, but which is not specified or indicated to be provided as part of the WORK under Division 16 Sections, in accordance with applicable provisions of Division 16 Sections.
   5. Provide, as part of the WORK under Division 15 Sections, Instrument and Control WORK necessary for the operation of a component, assembly or system but which is not specified or indicated to be provided as part of the WORK under Division 13 Sections, in accordance with applicable provisions of Division 13 Sections.

B. Coordination
   1. Process And Cleaning Fluid Waste Control
      a. All process fluids (chemicals), including flushing and cleaning solvents where specified, shall be coordinated, received, handled, stored, dispensed, utilized, and together with resultant waste, shall be disposed of in accordance with requirements of Owner's Representative's On-Site Chemical Management Function, who shall be, sufficiently in advance of the Work, advised of proposed activity, schedule, waste product concentrations and quantities, and as applicable, furnished with Materials and Safety Data Sheets for each product involved.
      b. Special care shall be exercised in handling/disposing of spills/wastes, to prevent injury to personnel, damage to facility/equipment, fire and pollution of environment.

C. Basic Electrical Requirements
   1. Electric power service shall be provided to factory assembled Division 15 and referenced Sections WORK, in accordance with the following, unless otherwise specified or indicated:
      a. Where "packaged" equipment or systems are specified, one or more power services may be required as part of the WORK under Division 16 Sections. Any required intercomponent or interassembly power, control, or instrument wiring for proper operation or functioning, shall be provided as part of the WORK under Division 15 Sections.

b. Where “packaged self-contained” equipment is specified, only one power supply will be provided as part of WORK under Division 16 Sections, except as otherwise modified or supplemented by the CONTRACT DOCUMENTS for that item. All other electrical equipment including disconnect switch, starters, and wiring shall be provided as part of WORK under Division 15 Sections.

2. Electrical WORK provided under Division 15 Sections shall conform to applicable UL, NEMA and NEC (ANSI/NFPA 70) Standards and Codes, and applicable material and installation requirements of Division 16 Sections.
3. Instrument and Control WORK provided under Division 15 Sections shall conform to the applicable material and installation requirements of Division 13 Sections.
4. Refer to ELECTRICAL and INSTRUMENT AND CONTROLS DRAWINGS and Divisions 13 and 16 Sections for specific provisions for and arrangement of interfacing components and circuits related to Division 15 Sections WORK.
5. For components/assemblies/systems provided with electrical requirements other than those specified, include as part of the WORK under Division 15 Sections, transformers, wiring, components and WORK necessary to the proper operation/functioning thereof.
6. Electrical ratings shall comply with ANSI/IEEE Std-141 and as follows:
   a. Electric power supply/service. 4160, 480 and 208 volts, 3 phase, 60 hertz (Hz) and 120 volts, 1-phase 60-hertz (Hz), hereinafter referred to as 4160 VAC, 480 VAC, 208 VAC and 120 VAC respectively.
   b. Electric motors. 4000, 460 and 208 volts, 3-phase, 60 hertz (Hz); 115 volt, 1-phase, 60 hertz (Hz), hereinafter referred to as 4000 VAC, 460 VAC, 208 VAC and 115 VAC respectively.
7. Provide wiring, which is external to electrical enclosures, within conduit, except where otherwise specified or indicated.
8. Coordinate the number of N.O. and N.C. and isolated contacts to be provided under Division 15 Sections to accommodate equipment/functions/interfaces specified or indicated by the CONTRACT DOCUMENTS.
9. Electrical testing of motors is specified as part of WORK under Division 16 Sections.

D. Related Work Specified In Other Sections
1. Division 01 Section “Summary of Work.”
2. Division 01 Section “Alteration Procedures.”
3. Division 01 Section “Shop Drawings, Product Data and Samples.”
4. Division 02 Section “Earthwork.”
5. Division 03 Section “Cast-In-Place Concrete.”
6. Division 09 Section “Painting.”
7. Division 13 Sections for Instruments and Controls, except as otherwise specified.
8. Division 16 Sections for Electrical Work, except as otherwise specified.

1.2 QUALITY ASSURANCE

A. General
1. Comply with the requirements of the GENERAL CONDITIONS and the SPECIAL CONDITIONS which form a part of the CONTRACT DOCUMENTS.

2. In the performance of the WORK, comply with the requirements of the CONTRACT DOCUMENTS and of the equipment manufacturer, whichever is the most stringent.
3. A deviation from SPECIFICATIONS which is not explicitly proposed/identified as a deviation, is subject to removal/replacement at any time after discovery and notification of the CONTRACTOR, at no additional cost to the OWNER.

B. Requirements Of Regulatory Agencies, Codes And Standards
1. Provide materials and equipment and execute the WORK, including tests and inspections, in compliance with the applicable provisions of the Federal, State and Local Government laws and ordinances and referenced codes and standards current, unless excepted, as of the issue date of this SPECIFICATION including applicable provisions of the Occupational Safety and Health Act (OSHA) and Environmental Protection Agency (EPA). Governing laws, ordinances, codes and standards constitute minimum requirements. All more stringent requirements of the CONTRACT DOCUMENTS shall modify, supplement and supersede applicable portions of governing laws, ordinances, codes and standards.

C. Referenced Specifications And Standards
1. The provisions of the REFERENCED SPECIFICATIONS AND STANDARDS, as applicable and referenced under Articles of this SECTION or other Division 15 Sections, govern the quality of materials, workmanship, and installation required under the CONTRACT.
2. AABC Associated Air Balance Council.
3. ABMA American Bearing Manufacturer's Association.
4. AISC American Institute of Steel Construction.
5. AISI American Iron and Steel Institute.
6. AMCA Air Moving and Conditioning Association.
7. ANSI American National Standards Institute.
8. ARI American Refrigeration Institute.
9. ASHRAE American Society of Heating, Refrigeration and Air Conditioning Engineers.
10. ASCE American Society of Civil Engineers.
11. ASME American Society of Mechanical Engineers.
12. ASPE American Society of Plumbing Engineers.
13. ASTM American Society for Testing and Materials.
14. AWWA American Water Works Association.
15. AWS American Welding Society.
16. BOCA Building Officials and Code Administrators International.
17. CAGI Compressed Air and Gas Institute.
18. CISPI Cast Iron Soil Pipe Institute.
19. EPA Environmental Protection Agency
20. FM Factory Mutual Global.
21. FS Federal Specifications.
22. FDA Food and Drug Administration.
23. HI Hydraulic Institute.
24. IEEE Institute of Electrical and Electronics Engineers.
25. MSS Manufacturer's Standardization Society.
26. NBBPVI National Board of Boiler and Pressure Vessel Inspectors.

27. NFPA National Fire Protection Association.
28. NIA National Insulation Association.
29. OSHA Occupational Safety and Health Act.
30. SMACNA Sheet Metal and Air Conditioning Contractors National Association.
31. UL Underwriter's Laboratories.
32. Perform all welding, brazing, soldering and cutting work in conformance with requirements of CONTRACT DOCUMENTS and applicable provisions of the following:
    a. American National Standards (ANSI) B31.1 Power Piping with current Addenda.
    b. American National Standards (ANSI) B31.3 Process Piping with current Addenda.
    c. American Society of Mechanical Engineers (ASME), Boiler and Pressure Vessel Code, Section IX, latest edition, as amended by any Addenda.
    d. American Welding Society (AWS) D1.1, Structural Welding Code, latest revision.
    e. American Welding Society (AWS), Brazing and Soldering Manuals.

D. Source Quality Control
1. Perform manufacturer's standard and any special shop tests for each component to ensure compliance with intent of the SPECIFICATIONS.
2. Materials and equipment shall be the products of manufacturers regularly engaged in the manufacture of such products, shall essentially duplicate equipment that has been in satisfactory service at least 2 years prior to issue date of the CONTRACT and shall be supported by a service organization that is reasonably convenient to the site.

1.3 SUBMITTALS

A. General
1. Submit per Division 01 Section "Shop Drawings, Product Data and Samples," GENERAL CONDITIONS and as supplemented herein.
2. Review of shop drawings does not constitute approval of a proposed deviation from the CONTRACT DOCUMENTS which is not specifically noted and identified as a deviation in the shop drawings submitted for review.
3. Partial/piece-meal submittal of assemblies/systems is not acceptable and these will be returned without review.
4. Delays incurred due to disapproved submittals are the CONTRACTOR'S responsibility.

B. Proposal Data
1. Provide upon request, prior to award of CONTRACT, a MATERIALS AND EQUIPMENT SOURCE LIST for the proposed WORK.
2. Sub-Vendor Technical Services. Include in LUMP SUM PRICE, separately stated cost of technical assistance services of each authorized representatives of the various product manufacturers, during proposed materials/equipment assembly, installation, start-up, training of OWNER'S operating and maintenance personnel, debugging and acceptance testing. Include labor, materials, travel, per diem and any other costs as part of the "field engineer" work.
3. Exceptions to Specifications. Descriptively state and price each proposed exception or deviation, referenced to a specific paragraph, and attach to PROPOSAL. In the event that an exception involves a price change, provide cost as a VOLUNTARY ALTERNATE

PRICE. Unless specifically stated otherwise in PROPOSAL, the OWNER will assume that PROPOSAL is made without any deviation from "PLANS and SPECS" and CONTRACTOR shall be held responsible for every requirement thereof.

C. Materials And Equipment Source List
   1. Upon request and prior to placing orders for materials and equipment, submit for approval, a list of manufacturing sources from which the CONTRACTOR proposes to acquire materials and equipment to be incorporated into the WORK. Source approvals are tentative and are subject to approval of submittals/shop drawings verifying compliance with the CONTRACT DOCUMENTS.
   2. Specified manufacturers with or without model designation, shall be acceptable only where the manufacturer's product complies with or is modified as necessary to comply with specified and indicated requirements, and inclusion of a manufacturer's name as an acceptable product source does not void any specified criteria.
   3. Materials and equipment not specified or indicated as to manufacturer, but necessary for complete functioning systems, shall be provided from sources optional to the CONTRACTOR, but conforming to the quality levels and functional requirements for corresponding materials and equipment specified.

D. Submittals Procedures
   1. Furnish submittals for materials and equipment and elements of WORK, including *Samples [S]*, that are identified in Division 15 Sections by a different typeface and a bracketed code (e.g., *Item [P]*). Refer to Division 01 Section "Shop Drawings, Product Data and Samples" for definition of codes for types of submittals and the administrative requirements governing submittal procedure. Additional submittal requirements pertaining to the WORK are specified herein and in related Division 15 Sections.

E. Proof Of Compliance
   1. The UL Label or Listing with re-examination by UL and FM Label or Approved Product Listing will be accepted as evidence that the material or equipment conforms to certain minimums, but not necessarily to all specified requirements.

F. Samples
   1. Provide *samples or mock-ups [S]* where specified or indicated by (S).

G. Materials Safety Data Sheets (MSDS)
   1. Provide *OSHA Form 174 equivalent Materials Safety Data Sheets [P]* for all chemistry/solvent containing products proposed/furnished/used/handled. Distribute data in compliance with "right-to-know" regulations.
   2. Develop and maintain a data log for all chemicals/solvents/flushing wastes to be tracked/accounted for on a daily, weekly, and monthly basis, during construction, and deliver same to OWNER, together with certification of proper disposal, prior to final acceptance.

H. Shop Drawings And Product Data

1. Prior to fabrication or procurement of materials or equipment, submit certified shop drawings covering materials and equipment proposed under this CONTRACT. Shop drawings shall delineate any provisions for obtaining required performance under project service conditions. Submitted performance data shall be inherently certified to be applicable to intended project service conditions.
2. Submittals shall exclude data which is not pertinent to objective of submittal. Submitted items shall be identified as to intended use. Submittals which are not clearly identified as to pertinent constituents and intended use will not be reviewed, at CONTRACTOR'S risk of delay.
3. Shop drawings shall bear the CONTRACT DOCUMENTS Project Name, Architect-Engineers Project No., Addenda/Bulletin No., Item Name, Mark No. System or Point-Of-Use description, Drawing No., Specification Section, Article, and Page No.
4. Each shop drawing submittal shall bear mark-ups and certification of checking for completeness of submittal and compliance with CONTRACT DOCUMENTS by the CONTRACTOR'S ENGINEER, otherwise submittal will not be reviewed, at CONTRACTOR'S risk of delay.
5. Shop drawings for WORK specified to comply with criteria specified under Divisions 13 and 16 Sections shall be submitted in compliance with additional specific requirements specified thereunder.
6. Shop drawings submittals shall include required copies of. clearly delineated verifications of compliance with the elements of the CONTRACT DOCUMENTS, performance, details of configuration, construction, materials suitable for the service, support, functional ancillary provisions, utilities including power connections, wiring diagrams and sequence of operations, installation details for construction field conditions, other SECTION and other contract work interface data, etc.
7. Shop drawings shall include:
   a. CD or floppy electronic media.
   b. Software and Drawings hard copy.
   c. Piping and Instrumentation Diagrams.
   d. Sequences of Operation.
   e. Power and control panels, wiring.
   f. Control schematics.
   g. Electrical system and instruments/controls systems interfaces with external circuits which are part of WORK of this CONTRACT and other contracts.
   h. Piping systems including external systems interfaces which are part of the WORK of this CONTRACT and other contracts.
   i. System and equipment plans, elevations, arrangement drawings, selected views.
   j. System and equipment Sections, details.
   k. Product data shall include performance data and complete description of all equipment and components provided, including catalog cuts, bills of materials, illustrations and other descriptive data.
8. Submit integrated electrical drawings including power, control and instrument wiring interfacing with work under separate contracts for field work as well as factory assembled work. Manufacturer's electrical drawings are acceptable only when modified and supplemented to exactly reflect CONTRACT conditions. The "system" of drawings shall

include. overall schematic (elementary) diagram of the entire system of power circuitry detailing the number of and wire and conduit sizes, wiring diagrams showing the wiring layout of component assemblies or systems, interconnection wiring diagrams showing terminations of the interconnecting conductors between component assemblies, systems, control devices, remote monitoring/control functions, and control panels with interconnections, sequence of operation for components, assemblies or systems.

9. For programmable logic controllers (PLC'S) supplied, provide the following:
   a. Drawings indicating detailed input/output connections.
   b. Input/output lists describing function of each input and output and associated addresses.
   c. Complete wiring diagrams showing communication cable interconnections including. Central processor, I/O drives, power supplies, RS-232/other interfaces and all other required equipment.
10. Where software programs for programmable logic controllers are supplied, provide the following:
   a. Complete software documentation including analog input/output registers, timer/counter registers, internal coils used and all other information required to allow future software additions without disturbing resident programs.
   b. Commented and fully documented ladder diagrams of initial software programs.
   c. Three copies of program CD's with final, debugged programs. Supply CD's after complete, field testing of software programs and OWNER acceptance.
   d. Ladder diagrams complete with full documentation of final software programs which duplicate in hard copy the program tapes described in Item 3 above.
11. If construction conditions mandate deviations from CONTRACT DOCUMENTS, details of such deviations, including changes in related portions of the project and the reasons therefore, shall be submitted as "shop drawings" for approval.
12. Submit recommended Field Start-Up and Acceptance Testing Procedures specific to systems and conditions of this project, for OWNER evaluation/revision/concurrence.
13. On completion of the WORK, and prior to acceptance thereof, AutoCad drawings in CD format of the "as-built" Drawings shall be delivered to the OWNER per Division 01 Section "Project Record Documents."

I. Start-Up/Debugging Schedule/Checklist/Inspection
   1. Develop and submit, as a shop drawing, a Start-up Schedule and Check List which includes coordination of interfacing piping and wiring and inspection of interfacing work.

J. Operation And Maintenance Data
   1. Provide per Division 01 Section "Operating and Maintenance Data" and as supplemented herein.
   2. After start-up, issue the O & M Manual with addenda/revisions to all recipients of the O & M Manual within 10 working days following acceptance of the system.
   3. Manuals shall incorporate data to enable operators and maintenance personnel to understand the equipment, its potentialities, performance, limitations and maintenance needs. Data on design, construction, installation and operating features shall be included. Data submitted shall exclude or obliterate content which is not applicable to equipment purchased under the CONTRACT.

4. Manuals shall include the following:
    a. Software, hard copy (if applicable).
    b. P & ID, Drawings, Schematics Diagrams (See Shop Drawing requirements).
    c. System OEM (Original Equipment Manufacture) components and assembly drawings as built.
    d. Equipment brochures, data and catalog cuts including:
        1) Performance. Normal and abnormal conditions.
        2) Installation.
        3) Operation. Normal and abnormal conditions.
        4) Trouble-shooting.
        5) Safety precautions.
        6) Maintenance and repair.
        7) Nearest authorized OEM representative and stocking spare parts source.
        8) Pass-thru OEM materials and equipment guarantee/warranty.
        9) List OEM sources and recommended spare parts, unspecified but required special tool diagnostic equipment, and special consumables inventory, necessary for one year continuous operation. Include current cost price breakdown and normal delivery time for recommended inventory.

K. Tools/Keys
1. Provide complete set of special tools as required for field maintenance. Provide a locked tool box and four keys for each set of tools.
2. Provide four sets of keys to all lock equipped control enclosures.

L. Test Reports
1. Deliver test data required by the CONTRACT DOCUMENTS prior to final acceptance.
2. Test data shall include final set points of devices.
3. Detailed field test procedures, and where required factory test procedures, shall be submitted for approval at least 60 days before actual testing begins. Procedures used shall be bound with TEST REPORTS.

1.4 OPERATING AND MAINTENANCE PERSONNEL TRAINING

A. Provide concurrent with check-out, debugging and start-up, a coordinated training program oriented to needs of operating personnel and maintenance personnel, sufficiently prior to acceptance of the WORK, upon mutually satisfactory arrangement with the OWNER.

B. Submit detailed Training Program Schedule and topic outline encompassing CONTRACTOR furnished systems, for approval by the OWNER.

C. Provide one copy of digital video disc (DVD) recording of instructions for OWNER’S use.

D. Provide a total of not less than specified or approved “class room” and all necessary “field” hours, in addition to requirements specified elsewhere, encompassing mechanical, electrical, chemical, pollution and safety aspects, sufficient for personnel to operate and maintain systems and consistently achieve specified objectives.

E. Product, systems technicians, start-up engineers, complemented by instrument engineers, supplemented by CONTRACTOR'S staff, shall comprise the training staff.

F. Training materials shall include samples, shop drawings, operating and maintenance manuals, demonstrations, specified reports/data, installed and functioning systems, and the like.

1.5 PROJECT CONDITIONS

A. Sequencing
   1. Make all connections to existing systems during designated periods, upon written approval of OWNER and at no increase in the CONTRACT Sum.
   2. Coordinate/ schedule sufficiently early delivery of equipment and subsequent installation WORK with interfacing WORK for required access, subsequent structural work, drainage provisions, external systems connections, concrete work and the like.
   3. Skid-mounted equipment shall be modular/sectionalized with alignment pins, as indicated or necessary, to pass through restricting access provisions, vertically or horizontally (if so designed) without field disassembly. Any disassembly and reassembly of equipment systems for access purposes shall be at no additional cost to OWNER.
   4. Provide equipment access including ladders to vessel manholes and locate access doors/manholes to accommodate indicated installation access provisions/constraints with maximum safety and convenience for OWNER'S personnel. Verify access orientation with General Arrangement Drawings before release of equipment/vessels for fabrication.

B. Existing Facilities
   1. Do not interrupt existing utilities, except as specified or when approved in writing, and then only after temporary utility services have been approved and provided. INTERRUPTIONS must be scheduled to suit OWNER requirements.
   2. Verify conditions and constraints of existing work. Where existing connections require modification in order to match or connect work under this CONTRACT, provide all necessary labor, materials, and equipment to accomplish the WORK. In addition, maintain integrity of the existing systems. Rectify any contamination, degradation of cleanliness or damage to the existing systems to the satisfaction of the OWNER. Provide all WORK so required at no increase in the CONTRACT Sum.

C. Removal Of Mechanical Equipment And Fixtures
   1. Disconnect mechanical work to be removed at the nearest convenient connection to existing services which are to remain. Disconnect the mechanical equipment and fixtures at fittings or header valves and plug or cap. Do not remove such equipment until approved by the OWNER.
   2. All materials and equipment which are removed, except for those items indicated to be relocated or delivered to OWNER storage or directed to be relocated or delivered to OWNER storage by the OWNER, shall become the property of the CONTRACTOR and shall be promptly removed from the site.

D. Asbestos Removal/Remediation Work
   1. Asbestos removal and remediation Work shall be done under separate Contracts.

E. Housekeeping/Safeguarding Construction
   1. Perform operations during construction and upon completion of the WORK of this CONTRACT in accordance with the applicable requirements of NFPA Standard No. 241 and the CONTRACT DOCUMENTS.

F. Trades Interference
   1. Space and elevation occupancy and sequence of occupancy shall be scheduled/coordinated or resolved, by the CONTRACTOR, to preclude any codes, trades or structures interferences between present and future WORK by this CONTRACTOR and other CONTRACTORS working in the area, at no additional cost to the OWNER.
   2. Coordinate underground piping, conduits, cables and substructures and aboveground piping, wiring, lighting fixtures, mechanical/electrical, ducting, building equipment, process equipment, control panels, and other construction, to facilitate the installation of this WORK and compliance with applicable codes.

1.6 GUARANTEE/WARRANTY

A. The guarantee shall comply with requirements of General Conditions, except where supplemented or superseded by specific requirements of Divisions 15 and 13 Sections.

B. For heating, ventilating and air conditioning systems, the minimum guarantee period shall be extended to include one complete heating season and one complete cooling season after final acceptance.

C. Pass through to OWNER, all OEM materials, equipment and performance guarantee/warranty and bind copies thereof in Maintenance Manuals.

D. The guarantee shall warrant that the WORK and execution thereof i.e. workmanship, materials, equipment and systems, and performance thereof, shall meet the specified/indicated requirements, for the specified period after final acceptance or if deficient, shall be reworked or replaced promptly, to meet requirements of the CONTRACT DOCUMENTS, at no additional cost to the OWNER.

E. Subsequent to final acceptance, the OWNER reserves the option to request performance tests throughout the guarantee period, in accordance with the requirements of the Article entitled, “FIELD TESTS DURING GUARANTEE PERIOD”.

1.7 PRODUCT INSPECTION, DELIVERY, STORAGE, HANDLING

A. Materials/Equipment Inspection
   1. The OWNER’S REPRESENTATIVES shall be granted the right to inspect and be present at the factory, upon any reasonable occasion, during the manufacture, assembly and pre-shipment shop testing, operation/simulation for all equipment covered by this CONTRACT.
   2. Provide OWNER with written notice two weeks prior to schedule date for conducting all tests required by the CONTRACT DOCUMENTS.

3. All material and equipment, workmanship and performance thereof, shall be subjected to inspection and test after its delivery to the site. In case any articles are found to be defective in material or workmanship or otherwise not in conformity with the SPECIFICATION requirements, OWNER shall have the right to reject such articles or require their correction.
4. Rejected WORK requiring correction shall be removed by and at the expense of the CONTRACTOR. Promptly remove such WORK and proceed with the replacement and/or correction thereof, since the OWNER may contract for or otherwise replace and/or correct such WORK, and charge to the CONTRACTOR, the excess cost occasioned the OWNER.

B. Shipping/Storage/Handling
1. Protect materials and equipment, including surface finish, against detrimental conditions within CONTRACTOR'S control, including freezing and corrosion, during transport, storage, receipt, erection, connection, and until acceptance within OWNER'S adequately environmentally controlled space.
2. Match mark disassembled components. Close and seal open ends and maintain so until connection, in compliance with specified cleanliness requirements. Modularize, reinforce, brace, pack for shipment and handling per applicable commerce requirements and for handling within constraints of site destination available access.
3. When storing equipment off-site, keep in dry, protected, environmentally controlled space, at a temperature range of 40 to 90 degF, humidity range to prevent condensation, packaged/sealed to prevent incursion of detrimental particulate.
4. Nitrogen blanket, desiccant protection and shrink-wrapping is suggested where applicable.
5. The OWNER shall be informed of the fact when equipment will be stored off-site.

PART 2 PRODUCTS

2.1 GENERAL

A. The CONTRACT DOCUMENTS define process concepts, materials and equipment, systems duty, capacity, operating conditions and product requirements, setting forth minimum requirements and details which will assist the BIDDER in the preparation of his Proposal and the successful CONTRACTOR in assuming responsibility for the whole WORK.

B. These minimum requirements and details shall not be construed as relieving the CONTRACTOR from providing all WORK in accordance with the necessary expertise and capacity, even though some items of WORK may not be complete or specifically mentioned or indicated, to suit the needs of the required WORK.

C. Where any project condition would adversely affect the continuous service performance or capability of indicated products, de-rate, modify, or propose replacement of the product, as necessary to obtain continuous service performance required by the CONTRACT DOCUMENTS.

2.2 LUBRICANTS

A. Obtain from manufacturer's Operating and Maintenance Manuals, types and sources of lubricants necessary to start-up, test and operate equipment installed under this CONTRACT.

B. Provide, where not furnished by OEM, lubricants of required quality/characteristics in sufficient quantity for start-up test and operation, until OWNER acceptance, and for a period not less than six months thereafter.

C. Record type, amount of lubricant used for each machine. Bind all data developed in Operating and Maintenance Manuals in Lubrication Section.

2.3 CLEANING AND WASTE SOLVENT AND PROCESS FLUID INVENTORY

A. Provide OWNER approved virgin or reclaimed cleaning solvent which is safe and non--reactive with containment materials and process fluids.

B. Waste cleaning solvent inventory and aggregate waste flushing process fluid, apportioned by process fluid system storage/pipe size/length, shall be disposed of to an OWNER selected and approved, EPA licensed/authorized/approved waste reclaim/disposal facility. The CONTRACTOR shall provide OWNER with a legal "paper trail" documentation of proper disposal before final payment.

2.4 INDUSTRIAL AC ELECTRIC MOTORS

A. General
   1. *'T' frame motors [D,P]:* Manufactured in the U.S.A. per applicable provisions of NEMA MG-1 and requirements specified herein. Manufacturer's standard special purpose motors may be provided where so specified or approved by the ARCHITECT-ENGINEER.
   2. *High efficiency motors [D,P]:* Manufactured in the U.S.A. per NEMA MG1, or, and the requirements specified herein.
      a. General Electric.
      b. Magnetek.
      c. Reliance
      d. U.S. Motors.

B. Service Requirements
   1. Duty requirements include:
      a. A motor minimum service factor of 1.10 with sizing at loads imposed by normal service operation of equipment to preclude brake horsepower requirements in excess of 100% of the nameplate horsepower.
      b. Sufficient torque to accelerate connected load to full rated speed within 20 seconds with 80% of rated voltage maintained at motor terminals during the starting period.
      c. Suitability for across-the-line, full-voltage starting.
      d. Suitability of insulation class for duty ambients.
      e. Suitability of enclosures for space atmosphere.

2. Furnish motors with frame dimensions and with shaft height and size suitable for the torque and speed ratings of the motor.
3. Motors under 1/2 horsepower. 115 volts single-phase, 60 hertz, permanent, split capacitor-start-induction run squirrel cage type, unless otherwise approved.
4. Motors 1/2 horsepower and over. 460 volts, 3 phase, 60 hertz, squirrel cage induction type, NEMA B, unless otherwise specified.
5. Two speed motors shall be two winding type.
6. Integral horsepower motor noise level per NEMA MG-1, Section 12.49, listed values.
7. Motors driven by electronic variable speed drives shall meet the requirements of NEMA MG1, Part 31, Definite Purpose Inverter-Fed Motors.

C. Construction
1. Furnish enclosures of ferrous materials with cast ferrous end bells. Furnish foot-mounted type motors, except as otherwise specified. Motor windings shall be copper.
2. For bearings in single phase motors, use prelubricated, seal-cartridge, manufacturer's standard anti-friction type.
3. For bearings in polyphase motors, use double-shielded, heavy duty ball or roller anti-friction type of U.S.A. manufacture with adequate provision for thrust imposed by equipment duty load. Construct bearings of degassed, vacuum processed alloy steel. Rate bearings for ISO 281 L-10 Minimum Rating Life for 30,000 hours at rated motor speed. Include lubrication fittings and relief to outside of housing for each bearing and make provisions for relubrication while operating.
4. Furnish grease lubricant selected for compatibility with duty ambients.
5. Provide integral horsepower motors with mechanically attached manufacturer's standard stainless steel nameplate containing ABMA bearing numbers.
6. Furnish open-dripproof enclosure, except as otherwise specified or indicated.
7. Furnish totally enclosed nonventilated or fan cooled enclosure where located in an airstream or where specified or indicated. Fit enclosures with drain plugs in catalogued available sizes.

2.5 MISCELLANEOUS MATERIALS

A. Equipment Grout
1. TYPE EP Water/Chemical/Oil Resistant Epoxy Grout: Premixed, nonshrink grout, consisting of plastic resins base, with appropriate modifiers:
   a. Euclid Chemical Co.
   b. Master Builders
   c. Five Star Products Inc.
   d. Blome Cements Co.
   e. Sika Corp.
   f. Sauereisen Cements Co.

B. Steel Primer Coatings
1. TYPE A: Polyamide blend high-build epoxy or urethane for manufacturer required substrate.
   a. Ameron "Amerlock 400"

b. Carboline “Carbomastic 15 or Low Temp 242”

2. TYPE B: Inorganic zinc rich coating per MIL-P-23236, Type I, Class 3 for manufacturer required substrate.
   a. Ameron, “Dimetcote”.
   b. Carboline Carbo-Zinc No. 11.
   c. Tnemec 92 zinc.

PART 3 EXECUTION

3.1 GENERAL

A. Execute the WORK, in accordance with the CONTRACT DOCUMENTS, to provide the OWNER with first class materials, equipment, state-of-the-art workmanship and expertise and appearance/finish, subject to the closest inspection by the CONTRACTOR, whether or not the OWNER or authorities having jurisdiction, perform any part of the inspection.

B. Execute the WORK in accordance with requirements of referenced codes, standards and regulations, the CONTRACTOR’S proffered experience in building specified systems, requirements of authorities having jurisdiction and where specified, in accordance with submitted and approved procedures.

C. Perform the WORK and provide required expertise, in accordance with manufacturer’s published and written project specific instructions, and where necessary for proper execution of the WORK or where specified, under the specific direction of a competent authorized technical representative of the manufacturer.

D. Materials and equipment furnished, and WORK done, shall be subject to inspection by the OWNER and authorities having jurisdiction. Such inspection shall not relieve the CONTRACTOR’S responsibility for furnishing qualified labor and material in strict accordance with these SPECIFICATIONS.

E. Materials and equipment not meeting specified requirements shall be rejected and replaced at once with materials or equipment of the specified type and quality, at no additional cost to the OWNER.

F. Systems shall be complete in all details, interfaces and ancillaries necessary to the specified WORK, and even though not all items of WORK necessary thereto are specifically mentioned by the CONTRACT DOCUMENTS, they shall be provided.

G. Provide, subject to OWNER’S approval, all modifications to ancillary facilities required by the proposed equipment, at no increase in CONTRACT Sum.

H. During construction and testing procedures, maintain integrity of existing structures.

I. Provide for and fit materials and equipment into available installation, maintenance access/clearance space indicated; otherwise, notify the Owner in advance of the WORK.

J. Provide, maintain and enforce safety and environmental protection provisions necessary to the Work, including OSHA "Lockout/Tagout" provisions, during construction/testing and for Owner's subsequent use, whether or not delineated on the Drawings. Include "Lockout/Tagout" specific shop drawings.

K. Refer to referenced SOURCES for applicable requirements which are modified or supplemented herein.

L. No changes or deviations from this SPECIFICATION shall be permitted without prior written approval and credit to OWNER where due.

M. It is incumbent upon the CONTRACTOR to ensure OWNER'S REPRESENTATIVE witnessing and inspection of WORK before closure.

3.2 CURBS AND HOUSEKEEPING PADS

A. Provide, as part of WORK under applicable Division 15 Sections, unless indicated otherwise, 4-inch high, cast-in-place (scarified/pinned/epoxy bonded) concrete curbs at all locations where piping/ducting not in sleeves penetrate aboveground concrete floors.

B. Provide, upon approval of equipment shop drawings and as part of WORK under applicable Division 15 Sections, unless indicated otherwise, cast-in-place (scarified/pinned/epoxy bonded) concrete "Housekeeping Pads" not less than 4 inches high or 6 inches high where indicated on DRAWINGS, and extending a minimum of 6 inches beyond the equipment mounted thereon.

C. Supply anchor bolt and sleeve assemblies for all concrete equipment bases required in connection with the work under this CONTRACT. Anchor bolts and sleeves shall be of approved material, size and shape. Inside diameter of sleeves shall be not less than 2-1/2 times the bolt diameter.

D. CONTRACTOR shall be responsible for providing an accurate drawing of each equipment base required with the location of each anchor bolt properly dimensioned, and check and approve the formwork and placement of the anchor bolts, prior to placement of concrete.

E. After setting and leveling the equipment, provide specified non-shrink grout for each base with minimum 1 inch nominal and maximum 2" thickness between the top of the concrete base and the bottom of the equipment base. Leveling of equipment and grouting shall be in strict accordance with manufacturer's recommendations and Millwright Trades requirements.

F. Apply two coats of polyamide epoxy for a total DFT of 6 mils. Color shall be grey, unless otherwise selected by OWNER'S REPRESENTATIVE. Refer to Division 09 Sections "Painting" and "Painting Materials" for materials and application.
   1. Ameron "Amercoat 66".
   2. Carboline No. 191
   3. Sherwin Williams
   4. Tnemec

G. Perform WORK in accordance with applicable requirements/details of the STRUCTURAL DRAWINGS and Division 03 Section "Cast-In-Place Concrete."

3.3 INSTALLATION AND APPLICATION INSTRUCTIONS

A. General

1. Furnish, apply, install, adjust, test and operate all materials, equipment and systems in conformance with the approved/certified shop drawings and manufacturer's published instructions, except as more stringently modified and supplemented by the CONTRACT DOCUMENTS. In the event of conflict between manufacturer's specific criteria and the CONTRACT DOCUMENTS, bring such conditions to the ARCHITECT-ENGINEER'S attention for resolution, to result in construction best suited to project conditions.
2. The procedures and means employed for doing the various classes of WORK shall be at the option of the CONTRACTOR, subject to the CONTRACT DOCUMENTS, to provide the OWNER with first-class materials, workmanship, and acceptable appearance/finish, subject to the closest inspection by the CONTRACTOR himself, whether or not the OWNER'S REPRESENTATIVE performs any part of the inspection.

B. Installation

1. Unload, receive, store, relocate, handle, uncrate, inspect, check, clean, assemble, rig, install, test and adjust all materials and equipment, each in its proper location with constraints as indicated or specified herein, complete with ancillary items, in satisfactory operation condition.
2. Set equipment to accurate line and grade, leveling equipment as required with metallic shims or filler plates.
3. Provide grouting; aligning equipment components. anchor bolts; drilling dowel holes and doweling equipment bases; vibration isolation.
4. Cut shims from shim-stock, sheet or plate steel or corrosion resistant metal sized for full bearing surfaces. Remove shims after grouting if so required by the manufacturer.
5. Provide field balancing.
6. Maintain tolerances in leveling, alignment and vibration and other specific installation requirements for each class of WORK in accordance with manufacturer's published installation instructions, unless otherwise specified.
7. Provide epoxy grout where specified and where grout is exposed to corrodent/oil exposed service, otherwise provide premixed, non-shrink grout, mixed and applied in accordance with the manufacturer's recommendation. Grout shall be complete, continuous and free from voids.
8. Furnish and position anchor bolts per approved/certified shop drawings, except as otherwise indicated. Locate per approved/certified shop drawings, underfloor conduit, drain lines and hub-outlets within or directly adjacent to equipment base and as closely as possible to equipment connections.

C. Thermal Metal Joining And Cutting

1. Each party performing thermal metal joining and cutting shall be responsible for the quality of WORK done by his organization and shall repair/replace, in accordance with

specified requirements, any WORK not performed in accordance with these SPECIFICATIONS.

2. All welding, brazing, soldering, and cutting work shall conform to the following codes and supplementary requirements.
   a. ASME Boiler and Pressure Vessel Code (BPVC) and Addenda, Section I, VIII and IX as applicable.
   b. ASME/ANSI B31.1 Power Piping Code and Addenda.
   c. ASME/ANSI B31.3 Process Piping Code and Addenda
   d. AWS D1.1 Structural Welding Code and Addenda.
   e. AWS Brazing Handbook.
   f. ASTM B 828 Standard Practice for Making Capillary joints by Soldering of Copper and Copper Alloy Tube and Fittings.
   g. CDA Copper Development Association Guide Specification for Copper and Copper Alloy Building Piping Systems.
   h. State/Local Codes.
3. Orbital welding is acceptable in all pipe sizes, shall be code compliant when executed by operators in accordance with manufacturer's instructions. Orbital welder operators shall be qualified on-site by manufacturer/CONTRACTOR, in presence of OWNER'S REPRESENTATIVE.
4. Welders and welding procedures employed on tanks, pressure vessels and pressure piping and specified work, shall be qualified per ASME/BPVC Section IX. Provide for each project material/joining method, a Welding Procedure Specification QW-842 (WPS), a corresponding Procedure Qualification Record QW-843 (PQR) and for personnel currently qualified to execute each WPS, a Welder or Welding Operator Qualification Test QW-844 (WOQ). WPS and PQR established by National Certified Pipe Welding Bureau (NCPWB), Hartford Steam Boiler Insurance Inspection (HSBII) and the like are acceptable. For each WPS employ personnel with current WOQ experience as defined by ASME/NCPWB/HSBII. Where a WOQ is more than three years old, the welder shall be re-qualified; where the welder has not been employed on applicable WOQ within the past three months, requalification is also required. File for record, each applicable WPS/PQR/WOQ.
5. Where specified, comply with OWNER-furnished WPS, PQR requirements and perform WOQ in the presence of OWNER'S REPRESENTATIVE.
6. Perform torch brazing of copper and alloys per NCPWB WPS 107.10/107.12, unless otherwise approved.
7. Perform soft soldering of copper and alloys per ASTM B 828 and CDA Guide Specification, unless otherwise approved.

3.4 BUILDING AND OTHER SURFACE PENETRATIONS

A. General
   1. Provide all openings and sleeves required for this Work in cooperation with the WORK under other SECTIONS, as indicated on the DRAWINGS.
   2. Surface penetrations shall be as described below and in conformance with applicable code requirements:
      a. Smoke proof/smoke rated where penetration of a smoke barrier occurs.

b. Fire proof/fire rated where penetration of a fire barrier occurs.
c. Watertight below grade.
d. Weathertight above grade.
e. Gas and vapor tight to preclude gas or vapor entry into conditioned or occupied spaces.
f. Sound-tight wherever necessary to preclude sound transmission to or between occupied spaces.
g. Vibration isolated from penetrated structure.
h. Toxic or deleterious-substance-tight where necessary to protect space content or occupant.
i. Explosion-proof where flammable liquids are stored or where flammable vapors are generated or where flammable gases may accumulate.

3. Utilize indicated openings and if necessary, upon prior approval, modify equipment or other work to suit, at no increase in CONTRACT Sum. In the event that indicated openings cannot be utilized, revise indicated openings or, if necessary, close indicated openings and provide new openings, all as part of the work of this CONTRACT, at no increase in CONTRACT Sum. Advise the ARCHITECT-ENGINEER of the need for revision of indicated openings, closure of indicated openings or replacement-new openings prior to award of CONTRACT so that a design can be made. After award of CONTRACT, costs related to design and shop drawing approval of indicated opening revision and closure and replacement-new openings shall be borne by the CONTRACTOR.
4. Provide all calking, flashings and counterflashings required to maintain integrity of sanitation and weather protection at all mechanical systems penetrations of building boundary surfaces.
5. Building surface penetrations and finish and execution thereof shall be by personnel skilled in the Work, compatible with specified function and contiguous surfaces and acceptable to the ARCHITECT-ENGINEER.

B. Cutting

1. To avoid unnecessary after-the-fact cutting of building surfaces. Provide all support inserts, sleeves, anchors, footings, foundations, chases, openings, drainage provisions and the like during construction, in sufficient time for appropriate trades to accommodate these items in the normal course of construction.
2. Do not cut, burn or weld, structural parts of the building without the written authority of the ARCHITECT-ENGINEER. Welding to building structural steel, where authorized, shall be done by certified welders only.
3. Do not place flame producing equipment on any roof without the written authority of the OWNER.
4. Use concrete/masonry saws for cutting openings in existing concrete/masonry surfaces.

3.5 SUPPORTING ELEMENTS

A. General
   1. Provide all supporting elements, including supplementary structural steel and ancillary devices necessary to support the WORK, in accordance with specified and indicated requirements and applicable codes and standards.
   2. During construction and testing procedures, maintain the structural integrity of existing WORK by providing temporary shoring, bracing and reinforcing to safely support/restrain the live and dead loads imposed on the WORK by material, workmen, testing or inclement weather conditions.

B. Fastening To Building Structures
   1. The methods of attaching or fastening equipment or equipment supports or hangers to the building structure shall be subject to approval by OWNER'S REPRESENTATIVE at all times. Submit shop drawings or samples for approval before proceeding with the WORK.
   2. Cutting, burring, drilling, welding or the use of explosive driven fasteners on building structures shall require prior approval by OWNER'S REPRESENTATIVE for each type of application, unless specifically shown on the DRAWINGS.
   3. Equipment or piping shall not be attached to or supported from the roof deck, from removable or knockout panels, or temporary walls or partitions.

3.6 MAINTENANCE OF SURFACES/HOUSEKEEPING

A. Recondition or replace concrete which has not been adequately protected during pipe fabricating operations and which has become oil-soaked. Reconditioning entails putting concrete into a condition suitable for satisfactory adhesion of any specified surface finish. If concrete cannot be satisfactorily reconditioned, it shall be removed and replaced at no increase in CONTRACT Sum.

B. During the WORK maintain clean and safe WORK surfaces and housekeeping at minimum in compliance with NFPA-241. Upon completion of WORK in each respective area, clean and protect all WORK. Just prior to final acceptance of the project, clean finish all WORK to the satisfaction of the OWNER.

3.7 PAINTING AND FINISHING

A. Provide manufacturer's standard color finish paint system, on all equipment that has a published catalog finish, except as otherwise specified.

B. Bring all finished materials/equipment surfaces damaged prior to final acceptance to "as new" condition by touch-up, or replacement with original manufacturer's finish, including paint/coating/plating/galvanizing/high lustre polishing finishes.

C. Shop or field fabricated bare supplementary steel or metal fabrications shall have rough/sharp surfaces/edges removed, shall be thoroughly cleaned free of dirt, rust, oil, grease, weld slag, etc. and prime painted with (TYPE A or TYPE B) primer (specified under Division 09 Section "Painting.").

D. Field fabricated bare iron or steel items required for installation of work under this Division shall have rough or sharp edges removed, be thoroughly cleaned of dirt, rust, weld slag, grease or oil and prime painted with materials specified under Division 09 Section “Painting.”

E. Insulation system for piping, ducting and equipment surfaces may include an integral finish or a finish coating requiring no additional painting, except for specified identification.

F. Provide shop applied prime paint on all other mechanical equipment, compatible with specified finish, except as otherwise specified.

G. Finish painting, including all necessary prime painting of unpainted Division 15 Sections WORK surfaces is specified as part of the WORK of Division 09 Section “Painting,” unless otherwise specified.

3.8 LOCK-OUT AND TAG-OUT REQUIREMENTS

A. Submit LOCK-OUT AND TAG-OUT requirements drawings and instructions where pertinent to equipment installed under this CONTRACT.

3.9 MECHANICAL SYSTEMS IDENTIFICATION

A. General
   1. Provide a coordinated identification system which conforms to ANSI A13.1 and ANSI Z53.1 and which provides the specific colors specified herein. The system shall include:
      a. Framed and plastic protected diagrammatic layout of all systems, identifying and showing distribution elements, equipment, automatic or manual control location.
      b. Metal tag identified valves, systems components and equipment.
      c. Marked location of access doors.
      d. Marked location of mechanical systems controls.
      e. Color code and service identified piping and equipment.
      f. Color code and service identified air handling system ductwork and equipment.
   2. Apply the permanent mechanical systems identification work after completion of painting and finishing of the systems and components to be identified.
   3. Submit the entire identification system, including color codes, label legends and tag designations which are coordinated with the DRAWING nomenclature, for approval by the ARCHITECT-ENGINEER, prior to proceeding with the work.

B. Diagrams
   1. Diagrams shall be professional graphic drawings mounted in aluminum frames with 1/8 inch thick acrylic or polycarbonate plastic protection. Locate as directed by the ARCHITECT-ENGINEER. Provide one set of charts and diagrams for each mechanical equipment room except where additional charts and diagrams are required to define the systems. Where more than one chart per space is required, mount these in 170 degree pivot edge, swing leaf, extruded aluminum frame holders. Miller Multiplex Displays (800-325-3350) System 3000, 8000, or other approved.

2. List the equipment by CONTRACT DOCUMENT designation number, and show capacities such as flow rates, pressure and temperature differences, heating capacities, horsepower, voltage and current characteristics. This is required for such major equipment items as pumps, air handling system equipment, compressors, boilers, etc.

C. Metal Tags
1. Provide all valves and equipment with corrosion resistant identification tags, minimum 2" diameter, brass, which can be easily read from floor level wired in place with No. 12 copper wire or equivalent brass chain and where applicable, give CONTRACT DOCUMENT equipment designation number. Wiring of tags shall be accomplished in a manner that will allow equipment operation thru normal cycles without removal of tag.
2. Tags shall identify the following:
   a. Valve or equipment type (for example ball valve BA).
   b. Area (for example Bldg. 100A).
   c. Service (for example NPW).
   d. Series number (for example #1).
   e. Sample Tag: VBA NPW 100A-1.

D. Identification
1. Locate legends and flow arrows in accordance with the following:
   a. Every 40 feet in straight runs.
   b. At each side of each building surface penetration.
   c. At branches and risers.
   d. At every sectionalizing or main shutoff valve.
   e. At each point where required to clearly identify system service.
   f. At each access door.
2. Provide legend letters of the following heights:

O.D. or Straight Side of a Surface	Letter Height
Less than 1-1/2"	1/2"
1-1/2" to 4"	1"
More than 4"	2"

3. When identification cannot be placed or retained on a surface for any reason, provide color coded double-faced sign panels supported from such surface by brass chain or by rigid means. Where one line is concealed from view by another, hang panels on lines to indicate location and direction of flow. Use 18 gage black sheet metal, 1/16" thick embossed aluminum, or 1/16" thick vacuum embossed plastic.
4. Where normal flow is in one direction provide a single arrow. Where flow is normally reversible, provide double arrow.
5. Where surfaces are adjacent to each other, line-up and locate legends to be visible from the floor. Make all legend outlines neat, free of fuzziness and other irregularities.
6. Make stencils of corrosion resisting metal, and upon completion of the work, deliver full set of stencils to OWNER.
7. Impregnated fabric or solid polyvinyl chloride plastic sheet, adhesive coated, commercially available identification legends are acceptable. Furnish materials suitable for continuous service at surface temperatures from -10 degF to 160 degF in relative humidities to 90 percent and for seasonal weather exposure without loss of attachment to surface being

identified. Should failure by loss of adhesion occur, repair contaminated surfaces and provide legend panels or stencil painted legends at no increase in the CONTRACT Sum.

a. Seton Name Plate Corp. “Snap-On”.
b. W.H. Brady Co.
c. Panduit Corp.
d. Markel.

3.10 CLEANING/PROCESS FLUID WASTE CONTROL

A. Process Fluids: All process fluids (chemicals), including cleaning solvents, shall be received, handled, stored, dispensed, utilized, and together with resultant waste, shall be disposed of in accordance with requirements of the Local Environmental Protection Authority and OWNER’S On-Site Chemical Coordinator, who shall be, sufficiently in advance of the WORK, advised of proposed activity, schedule, waste product concentrations and quantities, and furnished with Materials and Safety Data Sheets for each product involved.

B. Special care shall be exercised in handling/disposing of spills/wastes, to prevent injury to personnel, damage to facility/equipment, fire and pollution of environment.

C. Waste fluids shall be removed off-site to approved disposal facilities.

D. For materials which are disposed of off-site, provide the OWNER with paper audit trail and certification of disposal in accordance with the requirements specified and of authorities having jurisdiction.

3.11 FIELD QUALITY CONTROL

A. General
1. Prior to acceptance of the WORK, operate and test each completed system in conjunction with interfacing SECTIONS work, and in the presence of the Insurance Underwriters, and authorities having jurisdiction. Test systems per requirements of the local Fire Department, local Natural Gas Supplier, other applicable governing codes and the requirements specified herein. Provide all WORK materials, equipment and man power as required to properly execute each test.
2. Test Procedures: Develop the test procedures to demonstrate the satisfactory operation, within design intent, of each piece of equipment and each system. The test procedures, at minimum, shall be in compliance with the test procedures and methods recommended by the equipment suppliers/manufacturers. Submit the proposed test procedures to the OWNER/ARCHITECT-ENGINEER for review 30 days prior to start of testing.
3. Notify the OWNER/ARCHITECT-ENGINEER not less than ten working days prior to scheduled date of each test and request that a representative of the OWNER/ARCHITECT-ENGINEER witness each test.

B. Structural Integrity/Leak/Performance Acceptance/Miscellaneous Testing
1. Refer to Articles under the various Division 15 Sections, Division 13 Sections and Division 16 Sections for coordination and applicable requirements.

C. Noise Testing
   1. Refer to Division 13 Section “Noise Control” for applicable requirements.

D. Vibration Testing
   1. Refer to Articles under the various Division 15 Sections for applicable requirements.
   2. Refer to Division 13 Section “Vibration Control” for applicable requirements.

E. Systems Start-Up
   1. Adjust all parts of the various systems to function within the framework of design intent and operating characteristics specified or published by the equipment manufacturers. Bring into service condition all components, assemblies and systems prior to operation for any purpose, as required by the component, assembly or system manufacturer and the CONTRACT DOCUMENTS.
   2. In the event that temporary use of systems before all parts are complete is necessary and approved by the OWNER, adjust all parts to preclude damage and provide means to render temporary system use as effective as possible at no increase in CONTRACT Sum.
   3. Provide the services of an authorized technical representative of the manufacturer, satisfactory to the OWNER, in the event that the CONTRACTOR is unable to satisfactorily adjust any component, assembly or system and for OWNER’S personnel training. Arrangement for such services and costs thereof are to be borne by the CONTRACTOR.

F. Systems Operation Demonstration
   1. Calibrate and adjust, monitoring and control devices, accessories, equipment and components for stable and accurate operation to meet the design intent and to obtain optimum performance from each system. Final adjustment checking shall be performed while the systems are in full operation under load conditions. Cause every device to function manually and automatically, as intended, to insure its proper operation.
   2. After calibrations, adjustment, and checking have been completed and systems are operational, devise a program to demonstrate to the OWNER/ARCHITECT-ENGINEER and OWNER’S operating personnel the complete and correct functioning of all control systems and equipment in manual and fully automatic modes. These demonstrations shall consist of operating the controls through their normal full ranges and sequences. Simulate/induce, abnormal or emergency conditions to demonstrate proper functioning of safety devices or provisions. Readjust settings to their correct values and observe ability of systems to establish the desired conditions, noting abnormal deviations. Make necessary repairs, replacements or adjustments on items or systems which fail to perform satisfactorily and repeat tests to demonstrate compliance with the design intent. Demonstrate:
      a. Systems lock-out/tag-out provisions,
      b. Systems product delivery to point-of-use at specified/required quality, quantity, pressure,
      c. Proper control valve adjustment,
      d. Temperature control,
      e. Emergency liquid level control,
      f. Pressure control,

g. Taking portions of loops out-of-service, for local repair/change while maintaining remainder in service,
h. Sudden pump starts and stops or valve closure to simulate potential for system water hammer control response,
i. Simulate operation under part load, full load, detrimental conditions and determine system response.
j. Fail-safe crash due to loss of power or other utilities while in normal operation.
k. Compressed air pressure to operate valves at lower than design pressure.
l. Compliance with all other requirements to consistently deliver specified product/performance.

3. Notify the OWNER, sufficiently in advance of above scheduled WORK, so that the OWNER'S operating and maintenance personnel may be present for concurrent training purposes.
4. Upon satisfactory completion of each test, submit a written report to the OWNER/ARCHITECT-ENGINEER, including copies of test data to support the satisfactory completion, attesting to the adequacy and satisfactory performance of each piece of equipment and each system.
5. If testing indicates inadequacy of the equipment or the system, immediately notify the OWNER/ARCHITECT-ENGINEER and expedite the effecting of necessary change-outs or repairs to the equipment or to the system. After the equipment or the system has been corrected, retest the equipment or the system until satisfactory performance is demonstrated. Then comply with Paragraph 4 above.

3.12 SYSTEM OPERATION

A. Provide all necessary skilled staff and supervision man-hours to continuously operate and maintain systems during operation for CONTRACTOR'S convenience, and as required by the CONTRACT DOCUMENTS during systems start-up, check-out, adjustment/calibration, break-in, demonstration, performance testing, noise/vibration testing, acceptance testing, personnel training, and environmental conditions/concerns, and subsequently until final acceptance by the OWNER.

B. Equipment and systems shall be brought into proper operating condition prior to the operation of any equipment for any purpose or duration and subsequently, shall be put into appropriate and protective idle/standby condition on shut-down, in accordance with the requirements of the CONTRACT DOCUMENTS which includes all pertinent manufacturer's requirements and recommendations.

C. The cost of water, fuels and electricity supplied through OWNER'S meters will be borne by the OWNER.

3.13 FOLLOW-UP FIELD QUALITY CONTROL

A. Upon acceptance of the WORK by the OWNER, the guarantee period shall begin. At the same time, the OWNER will assume responsibility for operation and supply of expendables.

B. Approximately six months after the acceptance of the WORK, and while plant load is building up, the same field engineers who started the project systems shall return for at least two man-days of on-site observation, adjustment and supplementary training, for OWNER'S operating personnel. Upon completion of field work, the field engineers shall deliver to OWNER a comprehensive report as to WORK accomplished and/or WORK needed for the system to perform as required.

3.14 FIELD TESTS DURING GUARANTEE PERIOD

A. Testing to determine/verify compliance with requirements of CONTRACT DOCUMENTS shall be performed per the following:
   1. Test and testing procedures for items not delineated in CONTRACT DOCUMENTS, shall be mutually agreed upon, in writing, prior to start of testing.
   2. Specially requested test activity participant's costs shall be borne by:
      a. The OWNER if compliance is verified.
      b. The CONTRACTOR if testing indicates failure to comply.

B. Testing shall be performed in the presence of the OWNER'S REPRESENTATIVE.

C. If the testing or retesting of the WORK provided under this CONTRACT should indicate failure to meet the requirements of the CONTRACT DOCUMENTS, the CONTRACTOR shall be responsible for whatever addition, modification or replacements may be necessary to provide the OWNER with a system which fully conforms to these requirements. Repair work shall be scheduled at a time convenient to the facility being served.

3.15 TESTING SERVICES BY OWNER

A. The OWNER may employ the services of one or more testing agencies for the OWNER'S purposes, such as validating CONTRACTOR'S data. Any information or assistance furnished by these agencies shall not relieve the CONTRACTOR of his responsibility for his WORK and the rectification of any WORK which is not in compliance with the CONTRACT DOCUMENTS, without additional cost to the OWNER.

END OF SECTION

Revision History	
Date	**Rev. No.**
A	0
B	0
C	0
D	0
E	0
F	0
02-19-09	0

LMS/djo
Y:\d\timsdatasf\BROOKHAVEN_NATIONAL_LABORATORY\SF070003\200-PROJEXEC\280-SPEC\15050.doc

SECTION 15080

THERMAL INSULATION

PART 1 GENERAL

1.1 SUMMARY

A. Scope
1. Provide the various types of thermal insulation as shown, scheduled or specified. Include all accessories and components for properly functioning installations.

B. Piping Systems Thermal Insulation
1. INDOOR
a. Piping systems fibrous glass insulation:

MINIMUM INSULATION THICKNESS FOR PIPE SIZES*

Piping System Types	**Fluid Temp. Range degF**	**Runouts Up to 2 in. and 8 ft. length**	**1 and Less**	**1-1/4 to 2**	**2-1/2 to 4**	**5 and 6**	**8 and Larger**
Heating Systems							
Steam & Hot Water							
High Pressure/Temp	306-450	1.5	2.5	2.5	3.0	3.5	3.5
Medium Pressure/Temp	251-305	1.5	2.0	2.5	2.5	3.0	3.0
Low Pressure/Temp	201-250	1.0	1.5	1.5	2.0	2.0	2.0
Low Temperature	120-200	0.5	1.0	1.0	1.5	1.5	1.5
Steam Condensate	Any	1.0	1.0	1.5	2.0	2.0	2.0
Steam and Condensate Vents	Any	1.0	1.0	1.0	1.0	1.0	1.0
Domestic Hot Water	50-150	1.0	1.0	1.0	1.5	1.5	1.5
Hot Compressed Air	300	1.5	2.0	2.5	2.5	3.0	3.0

* Insulation thickness based on insulation having thermal resistances in range of 4.0 to 4.6 h x F x sq. ft./BTU per inch of thickness on a flat surface at a mean temperature of 75 degF.

b. Piping systems phenolic foam or polyisocyanurate insulation:

MINIMUM INSULATION THICKNESS FOR PIPE SIZES*

Piping System Types	**Fluid Temp. Range degF**	**1 and Less**	**1-1/4 to 2**	**2-1/2 to 4**	**5 and 6**	**8 and Larger**
Cooling Systems						
Chilled Water	40-55	0.5	0.75	1.0	1.0	1.0
Cooling Tower Water	80-95	0.5	0.75	1.0	1.0	1.0

c. Calcium silicate insulation for installation at Steam pressure regulating stations:

MINIMUM INSULATION THICKNESS FOR PIPE SIZES*

Piping System Types	Fluid Temp. Range degF	1 and Less	1-1/4 to 2	2-1/2 to 4	5 and 6	8 and Larger
Heating Systems						
Steam						
High Pressure/Temp	306-450	5.0	5.0	5.0	5.5	5.5
Medium Pressure/Temp	251-305	4.5	4.5	4.5	5.0	5.0
Low Pressure/Temp	201-250	3.0	3.0	3.5	3.5	3.5

d. Piping systems cellular elastomer insulation:

MINIMUM INSULATION THICKNESS FOR PIPE SIZES

Piping System Types	Up to 2”	Over 2” to 4”	Over 4” to 6”	Over 6” to 8”
Cold Water	½”	½”	½”	¾”
Roof Drains	½”	½”	½”	¾”
Storm Drains	½”	½”	¾”	¾”
Chilled Water	½”	¾”	1”	1”
Cooling Tower Water	½”	¾”	1”	1”
Condensation Drain	½”	¾”	--	--

2. OUTDOOR
   a. Piping systems shall be insulated with the following insulation thickness, heat traced as indicated and covered with a sealed aluminum jacket as follows:
      1) All services. Indoor thickness plus 1/2 inch, unless otherwise indicated on the DRAWINGS.
3. PIPING SYSTEMS ACCESSORIES AND EQUIPMENT
   a. Hot Water Heating Converters and Condensate Tanks: Fibrous glass or calcium silicate, 2 inches minimum thickness.
   b. Chilled Water Pumps: Cellular elastomer, 1 inch minimum thickness. At CONTRACTOR’S option, 1 inch minimum thickness insulating cement covered with UL Listed vapor barrier jacket with outer seal coat.
   c. Condensate Pumps: Calcium silicate, 1 inch minimum thickness. At CONTRACTOR’S option, 1 inch minimum thickness insulating cement covered with UL Listed outer seal coat.
   d. Water Chillers:
      1) Cellular elastomer, 1 inch minimum thickness for surfaces not factory insulated having a temperature of 55 degF or less.
      2) Fibrous glass, 1-1/2 inch minimum thickness for surfaces not factory insulated having a temperature of 55 degF or less.

C. Piping Systems Anti-Condensation Insulation

1. GENERAL

   a. Systems subject to exterior condensation because of internal fluids and pipe exterior ambient conditions shall be insulated per the following minimum thickness with a vapor barrier.

2. PIPING SYSTEMS INSIDE BUILDINGS

	Piping System	Min. Thickness (inches)	Remarks
a.	Cold Domestic (Potable) Water	1	Fibrous glass
b.	Plant or Service Water	1	Fibrous glass
c.	Coil Drain Piping	1	Fibrous glass
d.	Rain Conductors	1/2	Fibrous glass
e.	Sanitary Waste	1	Fibrous glass

3. PIPING SYSTEMS ACCESSORIES AND EQUIPMENT

   a. Roof Drain Body. Cellular elastomer, 3/8 inch thick with vapor tight junction between drain body and rain conductor piping insulation.

   b. Cold Water Pumps. Same as Chilled Water Pumps.

D. Air Handling Systems Thermal Insulation

1. INDOOR

   a. Air handling systems surfaces insulation thickness:

Cooling (degF)	Flex Duct Wrap Faced & Unfaced	Rigid Board Faced & Unfaced
Down to 55	1.5	1
54 - 45	1.5	1
44 - 35	2	1
	2	1-1/2
	3	1-1/2
	3	1-1/2
	3	2

   b. Insulation R-Values shall conform to requirements of ASHRAE 90.1, Table 6.8.2.

   c. Ducts, plenums, enclosures and fans not installed in enclosures shall be thermally insulated to extent indicated.

      1) Rigid fibrous glass with vapor barrier and factory applied jacket where exposed to view.

      2) Flexible fibrous glass with vapor barrier where concealed from view.

      3) Flexible fibrous glass with vapor barrier and glass cloth jacket.

E. Miscellaneous Surfaces Thermal Insulation

1. PIPING AT HANDICAPPED LAVATORIES

   a. Molded closed cell vinyl cover assembly, 1/2 inch minimum thickness, for hot water and drain piping from lavatory to wall.

F. Related Work Specified Under Other Sections
   1. Division 15 Section “General Mechanical Requirements.”

1.2 SUBMITTALS

A. Furnish submittals for items that are identified in this SECTION by a different typeface and a bracketed code (e.g., *Item [L]*). Refer to Division 01 Section “Shop Drawings, Product Data And Samples” for definition of codes for types of submittals and the administrative requirements governing submittal procedure. Additional submittal requirements pertaining to this SECTION are specified herein under this Article.

B. Show provisions for obtaining required performance under project service conditions.

C. Shop drawings for adhesives, coatings, mastics, sealants and solvents shall be accompanied by a MATERIAL SAFETY DATA Sheet similar to Form OSHA-174. Where flammable product application performance requirements are such that a non-flammable substitute would fail, submit alternative product with complete information for approval.

D. *Test Reports [P,T]:* Provide copies of performance test data.

E. Certificate: Submit certificate that materials performance data to be applicable under project service conditions.

PART 2 PRODUCTS

2.1 GENERAL

A. Provide noncombustible thermal system materials per NFPA 255 and ASTM E 84. Provide insulation with a Flame Spread Classification of 25 and a maximum Smoke Developed Classification of 35, 50 (fibrous glass), or 150 (cellular elastomer).

2.2 CALCIUM SILICATE

A. *Asbestos-free hydrous calcium silicate [P]:* With mineral binder, reinforcing fiber and free chloride ion content of less than 300 PPM and per ASTM C 533. Fittings insulation per ASTM C 450.

B. Piping insulation:
   1. Johns Manville Corp. “Thermo-12 Calcium Silicate”.
   2. Calsilite Corp. “Calsilite Insulation”
   3. PABCO Corp. “ SuperCaltemp, Type NA”.

C. Block insulation:
   1. Johns Manville Corp. “Thermo-12”.
   2. Calsilite Corp. “Calsilite Insulation”
   3. PABCO Corp. SuperCaltemp, Type NA”..

2.3 CELLULAR ELASTOMER

A. *Cellular elastomer [P]:* Insulation shall conform to ASTM C534 and have thermal conductivity not greater than 0.30 Btu-inch/hour, square foot, degF. at 75 deg. mean temperature and vapor permeability (ASTM C355), not greater than 0.20 perm inch. In thicknesses of 1" and less, it shall have a flame spread classification (ASTM E84, NFPA 255) not greater than 25, and specific optical smoke density (NFPA 258) averaging not greater than 270.
   1. Armacell, Armaflex II.
   2. Johns Manville, Aerotube AP and II.
   3. Rubatex, R-180-FS

B. Insulation thicknesses shall be as listed in Article 1.1.

C. Contact adhesive shall be as supplied by the insulation manufacturer.
   1. Armacell, 520 Adhesive.
   2. Johns Manville, 57 Adhesive.
   3. Rubatex, 373 Adhesive.

2.4 FIBROUS GLASS

A. *Ductwork insulation [P]:* Fiberglass blanket insulation shall conform to ASTM C553 and have thermal conductivity not greater than 0.32 Btu - inch/hour - square foot - Degree F. at 75 Degree F. mean temperature. Vapor barrier facing shall be a laminate of minimum 1 mil thickness aluminum foil exterior surface, glass fiber reinforcement, and kraft paper. The facing shall have water vapor permeance (ASTM E96, Procedure A) not greater than 0.5 perms.
   1. CertainTeed, Type 75 FSK Standard Duct Wrap.
   2. Johns Manville, R-Series Microlite with FSK.
   3. Knauf, Duct Wrap with Multi-Purpose FSK.
   4. Owens/Corning, All Service Faced Duct Wrap.

B. *Ductwork insulation [P]:* Insulation board shall conform to ASTM C612 Class 2 and have thermal conductivity not greater than 0.26 Btu - inch/hour - square foot - Degree F. at 75 Degree F. mean temperature. Density of insulation board shall be 6.0 lbs/cubic foot. Vapor barrier facing shall be a laminate of white kraft paper exterior surface, glass fiber reinforcement, and minimum 1 mil thickness aluminum foil. The facing shall have water vapor permeance (ASTM E96, Procedure A) of not more than 0.2 perms and puncture resistance (ASTM D781) not less than 50 units.
   1. CertainTeed, 1B600 ASJ Industrial Insulation Board.
   2. Johns Manville, Type 817 AP Spin-Glas.
   3. Knauf, 6PCF-ASJ Insulation Board.
   4. Owens/Corning, Type 705 ASJ-25 Fiberglas Insulation.

C. *Piping barrel insulation [P]:* Insulation shall conform to ASTM C547 Class 1 and have thermal conductivity not greater than 0.26 Btu-inch/hour, square foot, deg. F at 75 deg. F. mean temperature. Vapor barrier jacket shall be a laminate of white kraft paper exterior surface, glass fiber reinforcement, and minimum 1 mil thickness aluminum foil. The jacket shall have

water vapor permeance (ASTM E96, Procedure A) of not more than 0.02 perms, and puncture resistance (ASTM D781) not less than 50 units.

1. Johns Manville, Micro-Lok AP-T Plus.
2. Knauf, ASJ/SSL Pipe Insulation.
3. Owens/Corning, Fiberglass ASJ/SSL-II

D. *Pipe fitting insulation [P]:* Insulate flanges, couplings, fittings, and valves with either fiberglass blanket insulation or segments of pipe insulation, secured with 20 gage annealed stainless steel wire and given a smoothing coat of insulating and finishing cement. Thickness of insulation on fittings and valves shall be equal to that on the adjacent pipe. Thermal conductivity of fiberglass blanket insulation shall not be greater than 0.28 Btu. inch/hour, square foot, deg. F. at 75 deg F. mean temperature (density 1.0 PCF). Insulating and finishing cement shall be as supplied by the following approved manufactures under these trade names:

1. Celotex, MW-1 Insulating and Finishing Cement.
2. Pabco, Pabcote One Coat Insulating Cement.

E. *Hot equipment insulation [P]:* Insulation board shall conform to ASTM C612 Class 2 and shall have thermal conductivity not greater than 0.26 Btu - inch/hour - square foot - Degree F. at 75 Degree F. mean temperature and not greater than 0.35 Btu - inch/hour - square foot - Degree F. at 200 Degree F. mean temperature.

1. CertainTeed, 1B600 ASJ Industrial Insulation Board.
2. Johns Manville, Type 817 Spin-Glas.
3. Knauf, 6PCF-ASJ Insulation Board.
4. Owens/Corning, Type 705 ASJ Fiberglas.

2.5 PHENOLIC FOAM

A. *Chemically neutral phenolic foam insulation [P]:* Insulation manufactured as a continuous rigid molding with laminated minimum 1 mil thickness aluminum foil and Kraft paper vapor barrier jacket. Flame spread rating 25 or less and smoke developed rating 50 or less by ASTM E 84. Foam alone shall have flame spread rating not exceeding 10 and smoke developed rating not exceeding 15. Thermal conductivity of 0.12 at 40 degF and 0.13 at 75 degF. and suitable for temperatures of minus 290 to plus 250 degF.

1. Resolco. “Insul-Phen”.
2. Tarec, “Ecophen”.

2.6 POLYISOCYANURATE FOAM

A. Polyurethane modified polyisocyanurate cellular foam insulation manufactured as a continuous rigid molding with factory applied All-Service Jacket (ASJ) vapor retarder. UL Listed. Service temperature range of -297°F to +300°F (-183°C to +149°C). ASTM E 84 flame spread rating 25 and smoke developed rating 50. ASTM C518 k-Factor of 0.141 at 75°F (24°C).

1. Dow “Trymer 2000”.
2. Other approved.

2.7 MOLDED CLOSED CELL VINYL

A. Provide one-piece molded closed cell vinyl protective cover assembly per ADA4.19.4 and ANSI A117.1.
   1. Plumberex “Pro-Extreme.”
   2. Other approved.

2.8 REMOVABLE/REUSABLE INSULATION

A. Provide custom designed removable/reusable insulation blankets where specified. Comply with MICA Standards where indicated.

B. Insulation shall be fiberglass mat insulation or cellular elastomer as specified.

C. Fibrous glass insulation shall be encased in an inner and outer jacket of Teflon or silicone rubber impregnated fiberglass fabric suitable for temperatures to 500 degF. Minimum weight of fabric shall be 14 ounces per square yard. Fabric shall comply with UL 214 flammability test.

D. Cellular elastomer insulation for indicated pumps shall be used as metal liner per MICA Plate No. 48.

E. Manufacture:
   1. MIT International Inc. Houston, TX.
   2. Performance Contracting, Inc., Lenexa, Kansas.

2.9 JACKETS AND ACCESSORIES

A. Aluminum: For piping outside buildings weatherproof the insulation with 0.016” thick alloy 3003 aluminum jacketing with longitudinal lock seam and butt strap circumferential joints. Jacketing is to be as supplied by the following manufacturers under these trade names:
   1. Childers, Lock-On.
   2. Pabco, Surefit.

B. Stainless Steel: AISI Type stainless steel, smooth, 0.010 inches thick with manufacturer’s standard vapor barrier.
   1. Childers “Lock-On”.
   2. Insul-Coustic “Metal-Clad”.

C. Polyvinylchloride, 0.010 inches thick, per FS L-P-535, Composition A. Type II, manufacturer’s standard color. Use manufacturer’s standard joint adhesive.
   1. Johns Manville Corp. “Zeston”.
   2. Other approved.

D. Fittings Jackets:
   1. Polyvinylchloride, 0.010 inches thick, per FS L-P-535, Composition A, Type II, manufacturer's standard color. Use manufacturer's standard joint adhesive.
      a. CEEL-CO "Light-Gage".
      b. Proto Corp. "LoSmoke".
      c. Johns Manville Corp. "Zeston".
   2. Aluminum, approximately 0.032 inches thick, smooth, two piece.
      a. General Aluminum Supply Corp., Kansas City, Mo.
      b. Other approved.
   3. Stainless Steel. AISI Type stainless steel, smooth, 0.010 inches thick.
      a. Childers "Univers-Ell Jacs".
      b. Other approved.

E. Straps: AISI Type stainless steel, 15 mils thick, 1/2 inch wide.

F. Joint sealant: Aluminum pigmented butyl polymer.
   1. Foster Div., H. B. Fuller Co.,"Elastolar Sealant, Aluminum 95-44".
   2. Childers "Chil-Joint CP-70".

2.10 MISCELLANEOUS MATERIALS

A. *Insulating and Finishing Cement [P]*:
   1. Celotex MW-1 Insulating and Finishing Cement.
   2. Pabco Pabcote One Coat Insulating Cement.

B. *Vapor Barrier Mastic [P]*:
   1. Childers CP-30.
   2. Vimasco Corp.

C. *Adhesives [P]*:
   1. Foster Div., H. B. Fuller Co. LAGFAS 81-42W or Spark-Fas 85-20.
   2. Vimasco Corp.

D. *Lagging adhesives [P]*:
   1. Foster Div., Amchem Products Inc. "Seal-Fas" 30-36.
   2. Vimasco Corp.

E. *Sealants [P]*:
   1. Foster Div., H. B. Fuller Co.,"Elastolar" 95-44.
   2. Vimasco Corp.

F. *Coatings [P]*:
   1. Foster Div., H. B. Fuller Co. Monolar/Weather Rite 46-50.
   2. Vimasco Corp.

G. *Glass cloth [P]:* Plain weave per ASTM D 579 Type 723 or 723.1. Weight not less than 7.23 ounces per yard before sizing.

H. *Glass lagging tape [P]:* Elastic knitted cloth per MIL-C-20079, Type II Class 3. Weight 11 ounces per yard.
   1. Foster Div., H. B. Fuller Co. “Seal-Fas” Glass Lagging Tape.
   2. Other approved.

I. Wire: Annealed, 18 gage, Type 430 or 304 stainless steel.

PART 3 EXECUTION

3.1 WORKMANSHIP

A. Obtain permission of ARCHITECT-ENGINEER before starting insulation WORK on any piping. Test work shall be completed before insulation WORK is started.

B. Use insulating materials as specified for each class of service. Where pipes pass through floors or walls, continue insulation through sleeves.

3.2 INSTALLATION

A. General
   1. Apply insulation and jacketing where specified or indicated, per manufacturers published instructions and as specified.
   2. Clean surfaces free of oil, grease, dust and deleterious substances before insulation adhesives or mastic are applied. Provide solvent cleaning required to bring surfaces to such condition.
   3. Make joints tight, with insulation lengths tightly butted against each other. Where lengths are cut, make cuts smooth and square, without breaking end surfaces. Where insulation terminates, neatly taper ends and seal or finish as specified. Where pipe insulation terminates in finished areas, install chrome plated end caps. Direct longitudinal seams of exposed insulation away from normal view where possible.
   4. Shape contours smooth and continuous on exposed work. Smoothly and securely paste down cemented laps and tapes. Apply adhesives on a full-coverage basis except where otherwise specified. Make vapor barrier continuous over vapor sealed insulation.
   5. Insulate metal, such as anchors, in contact with low temperature surfaces and projecting beyond the finished insulation surfaces to prevent condensation. Insulate the projecting metal with 1/2 of the specified insulation thickness to a distance not less than 4 times the specified insulation thickness.
   6. Insulate pipe lines and equipment surfaces within reach of personnel walking areas and having a surface temperature over 140 degF. Consider “within reach” all areas 7 feet above floors, roofs or walkways or within 3 feet of elevated walkways at the sides.
   7. In pedestrian or vehicular traffic areas, protect insulated horizontal pipe 7 feet or less above the floor and insulated vertical pipe from the floor line to 8 feet above the floor with nonintegral jackets and required accessories.

8. Insulate flanges and grooved couplings, when couplings are permitted in insulated systems, the same thickness as the piping or by approved proprietary methods and materials.
9. Install pipe, duct, and equipment insulation, vapor barrier jacket materials, and insulated surface penetrations and seal all joints, surfaces, seams, fittings, valves, etc. to maintain vapor barrier continuity under systems application conditions as specified herein and in accordance with NICA/MICA/trade/manufacturer recommended practice. Seal-off insulation to the pipe, with specified/required/ suitable vapor barrier compound:
    a. Every 24 feet for on-the-run piping; each branch connection; at all flanges and soft fittings insulation; at all penetrations/terminations and like places where water/moisture ingress/condensation could occur.
    b. Seal-off to the insulation vapor barrier jacket, fittings/valve enclosures/supports/accessories etc. Isolate support inserts from on-run insulation.
    c. Typical on-run-of-pipe seals shall be made by bedding insulation bore in two inch wide vapor barrier mastic then sealing abutting faces with vapor barrier to jacket.
    d. At terminations, seal similarly adding cloth reinforcement and second coat of vapor barrier mastic. Apply similar seals at valve bonnets, supports, piping accessories.
    e. Provide access scaffolding, for use during insulation application, to prevent damage to vapor barrier/acoustic treatment jackets of piping systems. The OWNER shall repair all such damage prior to acceptance of work.

B. Piping Systems
1. COLD DOMESTIC WATER, COOLING TOWER WATER AND, CHILLED WATER PIPING
    a. Insulate piping per insulation manufacturer's instructions.
    b. Vapor seal insulation on fitting and valves in cold piping systems and domestic water systems by applying a layer of open weave glass cloth fabric embedded between two flood coats of vapor barrier mastic. Lap fabric 2" onto adjacent pipe insulation.
    c. Cement laps on longitudinal and butt joints with a vapor barrier adhesive.
    d. Where indicated on the DRAWINGS, insulate Chilled Water and Cooling Tower Water piping with a 1-inch thickness, combination 6 lb. density insulation over the top 1/2 of pipe, and 3 lb. density insulation on bottom 1/2 of pipe. Cover pipe with two layers of 24 mil aluminum jacketing. Piping installed in Sump Pit shall have jacketing sealed watertight with Type IIR Butyl caulk.
    e. Where piping is installed outdoors and is Electric Heat Traced, provide two-layer insulation with grooving or routing to accept heat tracing system components profiles and maximum external load bearing strength for heat trace element, process temperature control thermostats and system accessories banding/supports. Coordinate pipe insulation Work with Electric Heat Tracing Work and Division 16, to provide weather tight Work compliant with need for maintenance and inspection access to electrical components enclosed by insulation. Illustrate details in shop drawings.
2. HOT DOMESTIC WATER PIPING
    a. Cement laps on longitudinal seams and butt joints with adhesive. Vapor barrier continuity not required.
    b. Cover fittings and valves with an approved insulation cement, blocks of an approved insulating material and insulation cement, or mitered segments of the pipe insulation

to a thickness equal to that of the adjacent pipe insulation. On fittings and valves, install an outer jacket of glass cloth with adhesive.

3. HOT COMPRESSED AIR AND STEAM AND CONDENSATE PIPING
   a. Install factory jacketed fibrous glass insulation per manufacturer's instructions.
   b. Cover calcium silicate piping insulation with presized glass cloth. Jacket may be field or factory applied. Securely cement jackets, flaps and bands in place with adhesive. Overlap jacket not less than 1-1/2 inch. Butt joint jacketing bands not less than 4 inch wide.
   c. Fabricate fittings from segmented pipe insulation sections, bed in insulating cement and wire in place. Fill voids with insulating cement and provide 1/4 inch thick final coating. Impregnate glass lagging tape with adhesive, wrap on a 50% overlap basis and blend tape smoothly into adjacent jacketing. Apply additional adhesive as required for smooth contour.
   d. Finish exposed-to-view insulation with a 6 mil dry film of coating. Color as selected by the ARCHITECT-ENGINEER.
   e. Thermally insulate and sound isolate pressure regulating station piping and all valve and flange surfaces for a distance of 10 pipe diameters upstream of the station and 10 pipe diameters downstream of the first elbow downstream of the station with specified thickness of calcium silicate and lead sheeting. Prior to application of insulation jacketing, apply 1/64 inch thick lead sheet per recommendations of the Lead Industries Association. Insulation may be applied in two layers with lead sheet taped between layers.
4. RAIN CONDUCTORS
   a. Insulate nonvertical pipe and fittings including connection to roof or area drain body.
5. ROOF DRAIN SUMP AND ROOF DRAIN PAN
   a. Attach insulation by mechanical means and with adhesive. Insulate roof drain body in a vapor tight manner.
6. SANITARY WASTE NONVERTICAL ABOVEGROUND PIPING
   a. Insulate nonvertical pipe, fittings and miscellaneous surfaces in areas where damage from dripping condensate might occur over finished areas.

C. Air Handling System Surfaces
   1. On rectangular surfaces 10 inches or less wide apply the insulation with adhesive to the top, sides, and bottom of the duct. On rectangular surfaces more than 16 inches wide apply the insulation with adhesive to the top, side, impaled on pins stud welded to the bottom. Apply sufficient pins to the bottom to insure contact of the insulation with the sheet metal. Install speed nuts or clips to the pins. Where the pins have perforated the vapor seal facing, cut the pins close to the speed nuts and apply a patch of vapor seal tape to restore the vapor seal.
   2. Apply adhesive to contact surfaces between the insulation and the metal. Furnish brush-on fire proof type adhesives. Butt insulation sheets together firmly, tape joints with a vapor barrier tape, and cement down facing tabs.

D. Air Handling Systems Components And Equipment To Receive Rigid Fibrous Glass
   1. Fasten insulation hangers to outside of metal surface on 12 inch centers in both directions using hanger adhesive or weld on hangers using weld pin technique. Impale insulation over

hangers. Seal over fasteners with indoor vapor barrier coating or matching pressure sensitive tape patches. Apply top and bottom panels to lap side panels. Lap insulation boards at corners and seal joints with vapor barrier tape set in vapor barrier lap adhesive.

2. Terminate and seal the insulation where thermometers, controls, linkages, flexible connections, test connections and access doors occur in the ductwork so as not to interfere with their function or replacement. Seal terminating edges of insulation with indoor vapor barrier coating.
3. Single sheet access doors and access panels shall be insulated separately so as to be operable. Vapor seal insulation edges with indoor vapor barrier coating.
4. Concealed - no further finish required.
5. Exposed - no further finish required.

E. Jackets

1. Overlap joints 2 inches and for outdoor installation include joint sealant. Fittings jackets shall be two piece of the same material as the jacket or when approved by the ARCHITECT-ENGINEER for indoor use may be PVC or molded or routed fiberglass. Indoor piping installed within 8’-0” of floor shall be covered with an aluminum jacket.
2. Where indicated on the DRAWINGS cover insulated Cooling Tower Water piping with stainless steel jacket.

3.3 FIELD QUALITY CONTROL

A. Testing

1. When testing insulation conductance at any point, consider insulation conductance required by the SPECIFICATIONS as maximum, not average. If insulation conductance is found by test to exceed the stipulated maximum, either replace or add additional and complete insulation and finishing to bring system to the required maximum conductance.

END OF SECTION

Revision History	
Date	**Rev. No.**
A	0
B	0
C	0
D	0
E	0
F	0
02-19-09	0

LMS/djo
Y:\d\timsdatasf\BROOKHAVEN_NATIONAL_LABORATORY\SF070003\200-PROJEXEC\280-SPEC\15080.doc

SECTION 15100

UNDERGROUND PIPING SYSTEMS

PART 1 GENERAL

1.1 SUMMARY

A. Scope
1. Provide each system, complete as shown, scheduled or specified.

B. Description Of Systems
1. The WORK for each system includes, as appropriate to the design and location of the system, connections to existing work, required components, related earthwork, concrete work and testing, necessary to provide a complete, functioning system.
a. STORM DRAINAGE (ST)
1) TYPE CISP, CAST IRON SOIL PIPE or TYPE CISP-H, HUBLESS CAST IRON SOIL PIPE inside building to 5 feet outside building perimeter.
b. SANITARY DRAINAGE (SAN)
1) TYPE CISP, CAST IRON SOIL PIPE or, TYPE CISP-H, HUBLESS CAST IRON SOIL PIPE inside building to 5 feet outside building perimeter.
c. CONDENSER WATER (CWS,CWR)
1) TYPE CPR-U, COPPER TUBING.

C. Related Work Specified Under Other Sections
1. Division 02 Section “Earthwork.”
2. Division 02 Section “Sanitary Sewerage.”
3. Division 02 Section “Storm Drainage.”
4. Division 03 Section “Cast In Place Concrete.”
5. Division 05 Section “Miscellaneous Metal Fabrications.”
6. Division 15 Section “General Mechanical Requirements.”
7. Division 15 Section “Aboveground Piping Systems.”

1.2 QUALITY ASSURANCE

A. Reference Specifications
1. Division 02 Section “Soils And Aggregates.”

1.3 SUBMITTALS

A. Furnish submittals for items that are identified in this SECTION by a different typeface and a bracketed code (e.g., *Item [L]*). Refer to Division 01 Section “Shop Drawings, Product Data And Samples” for definition of codes for types of submittals and the administrative requirements governing submittal procedure. Additional submittal requirements pertaining to this SECTION are specified herein under this Article.

B. Include:
   1. Materials and equipment classification and identification.
   2. Component pressure/temperature rating.
   3. Piping and required supports , anchorage and restraints.
   4. Piping transition details.
   5. Special installation requirements.
   6. Catalog data.
   7. Deviations.

C. *Test reports [T]:* Submit copies of structural integrity, leakage and performance test data.

D. Certificate. Submit welder's qualifications before proceeding with the WORK.

E. Letter: Submit EPOXY BONDING COMPOUND manufacturer's detailed product application instructions.

1.4 RECORD DOCUMENTS

A. Submit as-built drawings and progress prints per Division 01 Section "Project Record Documents".

1.5 OPERATION AND MAINTENANCE DATA

A. Submit operating and maintenance data, special tools and spare parts list, per Division 01 Section "Operating And Maintenance Data".

PART 2 PRODUCTS

2.1 PIPING MATERIALS

A. General
   1. Ells, tees, reducing tees, wyes, couplings, increasers, crosses, transitions and end caps shall be of the same Type and Class of materials as the pipe, or of material having equal physical and chemical properties.

B. Type CISP, Cast Iron Soil Pipe
   1. Hub and spigot: Per ASTM A 74, service weight pipe coated inside and outside with coal tar enamel. Pipe with eccentrically cast, thin walls will not be accepted.
   2. Elastomer gaskets: Single pipe weight use, per ASTM C 564.

C. Type CISP-H, Hubless Cast Iron Soil Pipe
   1. Hubless: ASTM A 888 and Cast Iron Soil Pipe Institute (CISPI) CISPI 301, service weight pipe coated inside and outside with coal tar enamel. Pipe with eccentrically cast, thin walls will not be accepted.
   2. Joint: Conforming to CISPI 301 and ASTM A 888 use of a neoprene sleeve and two stainless steel clamps per joint.

D. Type CPR-U, Copper Tubing
   1. Seamless: Type K, per ASTM B 88. Wrought copper socket joint fittings per ANSI B16.22; brazed socket cup depth per MIL-F-1183. Joints shall be brazed except as otherwise specified.

E. Piping Transitions
   1. *Transitions [P]:* Provide for joining two different types of pipe materials such as cast iron, clay, steel, copper or plastic. Fabricate transitions with bushings capable of resisting normal moisture corrosion.
      a. Harsco Corp. “CT-Adapters”.
      b. Fernco Joint Sealer Co. “PVC Donut”.
      c. Joints, Inc. “Caulder”.

2.2 DRAINAGE SPECIALTIES

A. Wall Pipes
   1. Cast iron: Class D, bell and flange, flange and plain end, or plain end and mechanical joint, as indicated.
      a. Clow.
      b. American Cast Iron Pipe.
      c. United States Pipe & Foundry Co.

B. P-Trap
   1. P-Trap: Extra heavy cast iron for connection to TYPE CISP piping.

C. Type HO, Hub Outlet
   1. Type HO, Hub Outlet: Hub end of TYPE CISP pipe.

2.3 MISCELLANEOUS MATERIALS

A. *Bituminous Coating [P]*:
   1. Carboline “Bitumastic 50”.
   2. Porter International, Div. of Courtaulds Coatings. “Tarmastic 101”.

B. *Standard packing [P]:* Tarred oakum or jute per FS A-A-1186 Type II.

C. Sleeves: Standard weight black carbon steel pipe with anchor lugs except where continuously welded seal rings are indicated.

D. *Mechanically-expandable elastomer seal devices [P]*:
   1. Thunderline Corp. Wayne, MI., “Link Seal”.
   2. Metraflex, “Metraseal”.

E. *Gasket Join Lubricant [P]:* Use either pipe manufacturer’s recommended gasket lubricant or a hydrated bentonite gel applied per manufacturer’s instructions as joint lubricant.
   1. American Colloid Co. “Volclay”.

F. *Epoxy Bonding Compound [P]:* Two-component system suitable for bonding wet or dry concrete to each other and to other materials.
   1. Euclid Chemical Co. “Epoxy No. 452”.
   2. L&M Construction Chemicals Inc. “Epobond”. .
   3. Protex Ind. “Probond ET-150”.
   4. Sika Chemical Co. “Sikadur 32 Hi-Mod”.

G. Embedment (Bedding and Initial Backfill). Refer to Division 02 Section “Soils and Aggregates” for definitions of soils and aggregates, their uses and installation methods.

H. Concrete. Per ACI 301. Design concrete mix to provide a compressive strength of 3000 PSI per ASTM C 94.

2.4 MARKING TAPE

A. *Service [P]:* Identified 3 inch wide, orange color foil-backed polyethylene tape. Sewer service.
   1. Reef Industries, Inc.
   2. Allen Systems, Inc.
   3. Seaton Name Plate Corp.

PART 3 EXECUTION

3.1 GENERAL

A. The following construction methods are not intended to be completely detailed. Provide properly functioning systems per applicable referenced codes, manufacturer’s instructions and standards and best accepted safe practice of the Trade.

3.2 EXISTING UTILITIES AND SERVICES

A. General
   1. Do not interrupt utilities and services to other facilities on the premises without written permission of the OWNER; provide protection from damage for such utilities and services; provide temporary services if interruption interferes with OWNER’S operations.
   2. At least 30 days prior to start of demolition, give notice in writing, to the utility companies, service companies, and public authorities having interests, to allow them time to do appropriate preparatory work. Submit a copy of such notice to the ARCHITECT-ENGINEER for information.
   3. The OWNER will shut off the utilities and services serving the structures to be demolished. The OWNER will disconnect and seal the utilities and services. The disconnecting and sealing shall be done:
      a. At points just beyond limits of demolition.
      b. At property lines or at meter pits adjacent thereto.
   4. If utility or service lines, materials and equipment are to be removed from service, secure written permission from the owning companies or public authorities of this intent.

5. For utilities or services remaining in service, protect the lines from damage due to operations of the CONTRACT. Reroute utilities or services on a temporary basis as necessary to avoid damage due to operations of the CONTRACT; restore to original locations when conditions allow. Repair damage caused by operations of this CONTRACT.
6. Definitions. The following definitions apply to work under this Article:
   a. "Remove". Means to excavate, to remove utility or service, to seal ends at disconnection points and to backfill.
   b. "Abandon". Means to seal the ends at disconnection points and to leave utility or service in place. Where indicated, fill the abandoned lines with concrete.
7. For utilities and services to be removed from service, remove as required to clear the area for WORK of this CONTRACT.
8. For utilities and services to be abandoned, leave materials and equipment in place that do not interfere with operations or WORK of this CONTRACT.
9. Permanent seals shall consist of:
   a. Masonry or concrete bulkhead, or plate with concrete support, for ends of utilities and services removed from service or abandoned, and for non-pressure seals on lines in service.
   b. Plugs or caps appropriate to the type of pipe, with required permanent thrust restraint at terminations, for pressure lines in service.

B. New Connections
1. Make complete connections to new or existing structures. Repair damage caused as a result of WORK. Repair the work to comply with the CONTRACT DOCUMENTS at no increase in the CONTRACT sum.

3.3 PIPING EARTHWORK

A. Excavation And Backfill
1. Perform excavating and backfilling required for the WORK per Division 02 Section "Soils And Aggregates," Division 02 Section "Earthwork," and the following requirements.
2. Excavate to approximate bottoms and trim to lines and elevations in manner specified under EMBEDMENT. Use manual methods in areas adjacent to buried construction and utilities to avoid damage or unscheduled service interruption. Limit trench width or embankment conditions to preclude excessive earth loads on installed piping systems.
3. TRENCH BACKFILL starts at top of EMBEDMENT.

B. Embedment (Bedding And Initial Backfill)
1. Embedment extends from trimmed trench elevation to 12 inches above top of pipe or component or to other dimensions indicated. Trim rough trench to subgrade.
   a. Provide bedding and initial backfill as defined in Division 02 Section "Soils And Aggregates," and as indicated.
   b. Provide concrete bedding/encasement and initial backfill as indicated.
2. Provide stable, uniform support consisting of minimum compacted thickness below bottom of exterior surface of pipe, including bell, equal to 1/8 of the outside diameter of pipe but in no case less than 4 inches unless otherwise indicated. Shape bedding to provide full

length barrel support and to prevent point loading at pipe joints. Place and compact embedment per Division 02 Section “Soils And Aggregates.”

3. When the bottom of the excavation cannot support the pipe, excavate to further depth and width and refill to pipe laying grade with bedding material per Division 02 Section “Soils And Aggregates.”

3.4 PIPING INSTALLATION

A. General

1. Prior to lowering pipe into trench, clean, visually inspect for apparent defects and tap pipe to audibly detect hidden defects. Remove defective pipe from the site promptly. Prior to and during laying of pipe, maintain excavations dry and clear of water and extraneous materials. Provide minimum 4 inches of clearance in all directions for pipe passing under or through building grade beams.
2. Where pipe is embedded in an underground concrete structure, provide as indicated an elastomer joint within 12 inches of exterior surface of the structure, capable of absorbing movement without leakage.
3. Where connections between different piping materials are made, use manufactured “specials” and “transitions” to produce permanently tight joints.
4. Clean and lubricate elastomer joints prior to assembly. Check recessed gaskets with feeler gages.
5. Locate WORK at elevations to ensure proper surface drainage.
6. During the progress of construction, protect open ends of 18 inch and smaller pipe, fittings, and valves to prevent the admission of foreign matter. Place plugs or flanges in the ends of all installed work whenever work stops. Plugs shall be commercially manufactured products.

B. Type CISP, Cast Iron Soil Pipe

1. Install per CISPI Cast Iron Soil Pipe and Fittings Handbook except as modified by the CONTRACT DOCUMENTS.

C. Type CISP-H, Cast Iron Soil Pipe

1. Install per CISPI Cast Iron Soil Pipe and Fittings Handbook except as modified by the CONTRACT DOCUMENTS.
2. Make joints using neoprene sleeve and stainless steel clamps per manufacturer’s instructions to produce a liquid-tight joint without stressing sleeve.

D. Type CPR-U, Copper Underground

1. Clean tubing before installation. During the progress of construction, protect open ends of tubing, fittings and valves to prevent the admission of foreign matter. Place plugs in ends of installed work whenever work stops. Plugs shall be commercially manufactured products.
2. Cut copper tubing square for socket joints; remove burrs with approved cutting and reaming tools. Clean inside of fittings and outside surfaces of tubes in joint area with stainless steel wool before assembly of joint. Apply joint flux, filler material and heat source per the manufacturer’s instructions to provide proper capillary action to fill the

socket space and to achieve 100% of shear-line strength capability. Remake copper joints which fail pressure tests with new materials including pipe or tubing fittings and filler metal.

E. Epoxy Bonding To Existing Materials
   1. Use EPOXY BONDING COMPOUND to set sleeves or pipes in existing concrete or to bond dissimilar materials.
   2. The compound, when applied per the manufacturer's instructions, shall be capable of initial curing within 48 hours at temperatures as low as 40 degF and shall be capable of bonding any combination of the following properly prepared materials. Wet or dry, cured or uncured concrete or mortar; vitrified clay; cast iron, and carbon steel.

F. Jacking Of Pipe
   1. Do not jack pipe in place except upon prior approval of proposed materials and complete details of methods.

G. Hub Outlet
   1. At soil pipe stacks, vent stacks and roof conductors install hub end of TYPE CISP pipe flush with finished floor.
   2. Where indicated, terminate hub outlet 2 inches above finished floor.

H. Marking Tape
   1. Install approximately 6 to 8 inches below grades per manufacturer's instructions.

3.5 SURFACE PENETRATIONS

A. Provide sleeves where piping passes through floors and concrete or masonry walls.

B. Where sleeves are placed in existing concrete or masonry, utilize pipe size core drills and secure sleeves watertight with EPOXY BONDING COMPOUND. Do not load sleeves without approval of the ARCHITECT-ENGINEER.

C. Set sleeves flush with walls and 2 inches above finish floor, unless otherwise indicated.

D. For slab on grade and pit or sump wall penetrations, provide required annular space clearance full depth of slab, and utilize MECHANICALLY EXPANDABLE RESILIENT calking device.

3.6 FIELD QUALITY CONTROL

A. Flushing And Disinfection Work
   1. Perform cleaning of nitrogen and hydrogen piping per Division 15 Section "Aboveground Piping Systems."
   2. Perform flushing and disinfection work per Division 15 Section "Aboveground Piping Systems."
   3. Perform fire protection water system piping flushing work per NFPA Standard No. 13.

B. General Piping Systems Testing Requirements

1. Prior to acceptance of the WORK, test piping systems in the presence of the ARCHITECT-ENGINEER, BNL Pressure Safety Representative, and authorities having jurisdiction, per respective and applicable governing codes and requirements of this SECTION. Conduct tests prior to concealing piping. Backfill to extent required to prevent movement.
2. Provide necessary equipment and materials and make necessary test connections required to properly execute tests.
3. Use only potable water for hydrostatic testing.
4. Obtain water from point(s) designated by the ARCHITECT-ENGINEER. Promptly remove temporary connections upon completion of testing or when directed by the ARCHITECT-ENGINEER.
5. Use dry, oil-free compressed air, carbon dioxide or nitrogen for pneumatic testing, unless otherwise approved.
6. Remake leaking gasket joints with new gaskets and new flange bolting. Destroy old bolting. Where welded joints fail, submit proposed method of repair for approval by the ARCHITECT-ENGINEER. Testing shall take place during steady state ambient temperature conditions.
7. Other than standard piping flanges, plugs, caps and valves, use only commercially manufactured expandable elastomer plugs for sealing off piping for test purposes. The safe test pressure rating of any plug used shall be not less than two times the actual test pressure being applied. Do not use expandable elastomer plugs for piping which could develop sufficient reactive force to cause damage to a structure, other piping, or cause moving of thrust or anchor provisions in case of blow-out.
8. Remove components from piping systems during testing whenever the component may sustain damage due to test pressure or test media. After completion of the test, reinstall the component and retest at the component pressure rating with suitable media.
9. Check system components such as valves for functional operation under system test pressure. Do not add test media to a system during a test for a period as specified or to be determined by ARCHITECT-ENGINEER. Duration of test shall be as specified.
10. Prepare and maintain records of piping systems tests. Record ARCHITECT-ENGINEER and CONTRACTOR personnel responsibilities, dates, test gage identification numbers, ambient temperature, pressure ranges, rates of pressure drop and leakage rates.
11. The connection between new underground piping and the existing shall be separately tested. Pressure specified in governing code shall be maintained on the joint for not less than 30 minutes.
12. In the event testing demonstrates leakage rates in excess of specified limits, determine source(s) of leakage, repair or replace defective materials and workmanship and retest installation until compliance with specified requirements.

C. Acceptance Pressure Testing

1. Perform pneumatic test in two stages, i.e., preliminary and acceptance. Do not perform pneumatic testing until personnel not directly involved in performing the testing have been evacuated from the area. Pneumatic testing of any system for any purpose shall require preliminary testing at pressure not exceeding 5 PSI. Testing at 5 PSI shall require swabbing joints with a commercial leak detector solution and subsequent observation for

bubbles. In the event that testing demonstrates that leakage rate exceeds specified limits, determine the source(s) of leakage, repair or replace defective materials and workmanship, and retest the installation until compliance with specified requirements.

2. Take necessary precautions to vent the expansive force of compressed air trapped during high pressure hydrostatic pressure testing to preclude injury and damage. The ARCHITECT-ENGINEER may require the removal of any system component including plugs and caps to ascertain whether the water has reached all parts of the system if purging or vent valves are not provided during construction.
3. Perform acceptance pressure testing as follows:

	SERVICE	OPER. PRESS. (PSI)	TEST TYPE	TEST PRESS. (PSI)	PERMISSIBLE PRESS. DROP & HOLD PERIOD (PSI/HOURS)
a.	Condenser Water		Hydrostatic		2/2

D. Sanitary Sewers (SAN)
1. GENERAL
   a. Test per requirements of the governing codes.
2. HYDROSTATIC TEST
   a. Apply test pressure after venting entire or completed portions of the system. Each piping joint shall be subjected to test pressure. Provide necessary supplementary vents to relieve trapped air, close openings, except highest opening. Fill system with water so that no joint is subjected to less than 10 foot static head but in no case in excess of manufacturer's recommended maximum pressure, for not less than 15 minutes prior to start of test and inspection period. There shall be no drop in water level for 15 minutes.
3. PNEUMATIC TEST (FOR 24 INCH DIAMETER AND SMALLER)
   a. Apply pneumatic test in the event of possible water freezing or at CONTRACTOR'S option. Apply test pressure to entire system or to portions thereof. However, each piping system joint shall be subjected to test pressure.
   b. Close openings and apply, safely pressure regulated and relieved, compressed air or inert gas to a pressure of 5 PSI. Maintain test pressure for a period not less than 15 minutes without need to introduce additional test medium. Leakage detection may be expedited by addition of a safe odorant such as oil of wintergreen.
4. ALIGNMENT TEST
   a. Visual test by ARCHITECT-ENGINEER, by any method he elects to use, after not less than two feet of backfill is in place.

E. Storm Sewers (ST)
1. GENERAL
   a. Test per requirements of the governing codes.

2. EXFILTRATION TEST
   a. Apply hydrostatic test to piping system, including manholes within present and future expansion building perimeter, essentially as specified for SANITARY SEWERS, except as modified and supplemented hereunder.
   b. Soak porous materials for not less than 24 hours prior to start of test. Apply test pressure in range of 10 to 25 feet static head. Leakage rate shall not exceed 0.6 gallons per inch of pipe diameter per 100 feet of pipe per hour.
3. ALIGNMENT TEST
   a. Visual test by ARCHITECT-ENGINEER, by any method he elects to use, after not less than 2 feet of backfill is in place.

3.7 CLEANING AND FINISHING

A. Upon completion of work in each respective area, clean and protect work. Just prior to final acceptance, perform additional cleaning as necessary to provide clean equipment and areas to the OWNER.

END OF SECTION

Revision History	
Date	**Rev. No.**
A	0
B	0
C	0
D	0
E	0
F	0
02-19-09	0

LMS/djo
Y:\d\timsdatasf\BROOKHAVEN_NATIONAL_LABORATORY\SF070003\200-PROJEXEC\280-SPEC\15100.doc

SECTION 15105

ABOVEGROUND PIPING SYSTEMS

PART 1 GENERAL

1.1 SUMMARY

A. Scope
   1. Refer to Division 15 Section “General Mechanical Requirements” for additional requirements.
   2. Provide complete, operating piping systems with materials of construction and methods of fabrication, assembly, erection, testing and interim operation in compliance with the requirements specified herein and requirements of applicable codes and authorities having jurisdiction.

B. Description Of Systems
   1. GENERAL
      a. The WORK for each system described herein includes, as appropriate to the design and location of the system, connections to existing work, required components, related work, including testing necessary to provide a complete functioning system.
      b. Ferrous piping systems 2” and under shall have threaded joints. Other joining methods may be required or allowed where indicated or specified.
      c. Metallic piping systems 2-1/2” and larger shall have flanged ends and welded joints. Other joining methods may be required or allowed where indicated or specified.
      d. Grooved-end piping, couplings and fittings, will be accepted only where specified.
   2. CHILLED WATER (CHS, CHR)
      a. Piping. TYPE BCS-150, BLACK CARBON STEEL.
      b. Piping. TYPE CPR-BJ, COPPER BRAZED JOINT, use for piping sized 2” and under.
      c. Valves:
         1) Ball: BA-2, BA-2B for TYPE CPR-BJ piping. BA-1 for vent and drain service only.
         2) Butterfly: BF-1, BF-2 30-inch and larger option, BF-4 high performance for throttling service where indicated.
         3) Check: CK-1, CK-2, CK-18 silent non-slam for pump service.
         4) Gate: GA-1, GA-2.
         5) Plug: PL-1.
         6) Special Service: PCV
      d. Gaskets: TYPE NBR
      e. Bolts: High Strength.
      f. Special requirements: Shall be threaded, socket or butt welded, in sizes 2 inch and under. Provide grooved couplings and fittings only where shown on the DRAWINGS.

3. CONDENSATION DRAINAGE, COIL
    a. Piping:
        1) TYPE CPR-DWV, COPPER DRAINAGE SYSTEM.
4. COOLING TOWER WATER (CWS,CWR)
    a. Piping: TYPE BCS-150, BLACK CARBON STEEL.
    b. Piping: TYPE CPR-BJ, COPPER BRAZED JOINT, use for piping sized 2” and under.
    c. Valves:
        1) Ball: BA-2, BA-2B for TYPE CPR-BJ piping. BA-1 for vent and drain service only.
        2) Butterfly: BF-1, BF-4 where indicated.
        3) Check: CK-1, CK-2, CK-15 non-slam silent-check for pump service.
        4) Plug: PL-1.
    d. Gaskets: TYPE CS.
    e. Bolts: High Strength, except as otherwise specified for cast iron flanges.
    f. Special requirements. Shall be threaded, socket or butt welded, in sizes 2 inch and under. Provide grooved couplings and fittings only where shown on the DRAWINGS.
5. FIRE PROTECTION:
    a. See Division 15 Section “Fire Protection Systems.”
6. INSTRUMENT AIR (CAI)(HCA)
    a. Piping:
        1) TYPE BCS-150, BLACK CARBON STEEL.
        2) TYPE CPR-BJ, COPPER BRAZED JOINT. May be used in 2 inch and under piping.
    b. Valves:
        1) Ball: BA-2, BA-4C. BA-1 for drain service.
        2) Butterfly: BF-1, where indicated.
        3) Check: CK-30.
    c. Gaskets: TYPE CS.
    d. Bolts: High Strength, except as otherwise specified for cast iron flanges.
    e. Special Requirements:
        1) Steel pipe shall be threaded, socket or butt welded, in sizes 2 inches and under.
        2) Compressed Air system piping and components shall be “silicone-free” construction. Use of silicone lubricants or sealants is prohibited. Submit manufacturer’s certification that components furnished are silicone free.
7. NONPOTABLE WATER (SWS)
    a. Piping:
        1) TYPE GCS-150, GALVANIZED CARBON STEEL.
    b. Valves:
        1) Ball: BA-2, BA-1 for vent and drain only.
        2) Butterfly: BF-1.
        3) Check: CK-1, CK-2.
        4) Plug: PL-1, PL-3A.
    c. Gaskets: TYPE RR
    d. Bolts: General Service, except as otherwise specified or required.
    e. Special Requirements: Construct, disinfect as POTABLE WATER (PW).

8. POTABLE (DOMESTIC) WATER (CDW) (HDW)
    a. Piping:
        1) TYPE GCS-150, GALVANIZED CARBON STEEL. For piping 2-1/2 inches and larger.
        2) TYPE CPR-SJ, COPPER SOLDER JOINT. For piping 2 inches and under or at CONTRACTOR'S option, in larger sizes.
    b. Valves:
        1) Ball: BA-2, BA-2A, BA-9, BA-1 for vent and drain only.
        2) Butterfly: BF-1.
        3) Check: CK-1, CK-2, CK-15 non-slam silent check for pump service.
        4) Gate: GA-1, GA-2.
        5) Globe: GL-1, GL-2.
    c. Gaskets: TYPE RR.
    d. Bolts: General Service.
    e. Special Requirements: Joint filler metal and piping components shall be lead free in compliance with NSF and EPA requirements. Use multiple head torches for copper joints sized 2-inches and larger. Grooved couplings, galvanized fittings are acceptable for cold water service. BIDDER may propose a VOLUNTARY ALTERNATE to provide TYPE GCS piping in lieu of TYPE CPR piping.
9. PUMPED CONDENSATE (PCR)
    a. Piping: TYPE BCS-150, BLACK CARBON STEEL SYSTEM. Sch. 40. Shall be screwed, socket or butt welded.
    b. Valves:
        1) Check: CK-1.
        2) Gate: GA-1.
        3) Globe: GL-8 at pressure gauges.
    c. Gaskets: TYPE CS, (GRAF).
    d. Bolts: General Service, except as otherwise specified or required.
10. ROOF CONDUCTOR (RC):
    a. See STORM DRAINAGE (STW)
11. SANITARY DRAINAGE (GRAVITY) (SAN)
    a. Piping:
        1) Type GCS-DWV, GALVANIZED CARBON STEEL DRAINAGE SYSTEM. Use for 2 inch and smaller drainage and vent piping.
        2) TYPE CISP-H, CAST IRON SOIL PIPE-HUBLESS. Use for 3 inch and larger drainage and vent piping.
        3) TYPE CISP, CAST IRON SOIL PIPE. Use for 3 inch and larger drainage and vent piping.
        4) TYPE SS-304L, STAINLESS STEEL PIPE. Where indicated.
12. SANITARY, (PUMPED) (SAN-P)
    a. Piping:
        1) TYPE BCS-150, BLACK CARBON STEEL. Long radius butt weld or hydraulically bent change-of-direction, with chill-rings or consumable insert rings (no icicles) lateral inspection/clean out ports, piggable.

b. Valves:
   1) Check. CK-34 with (Buna-N) sleeve designed for not less than 50 psi back pressure.
   2) Plug. PL-1.
c. Gaskets. TYPE NBR.
d. Bolts. General Service, except as otherwise specified or required.
e. Special Requirements. Construct piping bore and changes-of-direction to permit pigging without hang-up.

13. SONOXIDE SYSTEM PIPING
    a. Piping: TYPE PVC, POLYVINYL CHLORIDE, SCH-80.
    b. Valves:
       1) Ball: BA-9.
       2) Check: CK-15F.
14. LOW PRESSURE STEAM AND CONDENSATE, (LPS)/(LPC), CONDENSATE RETURN VENT (CRV)
    a. Piping: TYPE BCS-LPS, BLACK CARBON STEEL SYSTEM. Shall be screwed, socket or butt welded in sizes 2 inch and under, butt welded or screwed in sizes 2-1/2” thru 5”, and butt welded in sizes 6” and larger.
    b. Valves:
       1) Check: CK-1, CK-2.
       2) Gate: GA-1, GA-2.
       3) Globe: GL-8 at pressure gauges, GL-6, GL-7.
    c. Gaskets: TYPE CS, (GRAF).
    d. Bolts: General Service, except as otherwise specified or required.
15. HIGH PRESSURE STEAM AND CONDENSATE, (IPS)/(IPC), SAFETY RELIEF VALVE VENT (PSV)
    a. Piping: TYPE BCS-IPS, BLACK CARBON STEEL SYSTEM. Shall be socket welded in sizes 2 inch and under, and butt welded in sizes 2-1/2” and larger.
    b. Valves:
       1) Check: CK-1, CK-2.
       2) Gate: GA-1, GA-2.
       3) Globe: GL-8 at pressure gauges, GL-6, GL-7.
    c. Gaskets: TYPE CS, (GRAF).
    d. Bolts: General Service, except as otherwise specified or required.
16. STORM DRAINAGE (GRAVITY) (STW)
    a. Piping:
       1) TYPE GCS-DWV, GALVANIZED CARBON STEEL DRAINAGE SYSTEM. Grooved couplings and galvanized fittings are acceptable.
       2) TYPE CISP-H, CAST IRON SOIL PIPE-HUBLESS.
17. MISCELLANEOUS SYSTEMS/VENTS, DRAINS
    a. Piping: See Systems SPECIFICATIONS and DRAWINGS. Select from appropriate TYPE, materials systems.
    b. Plumbing System Vents and Drains: Comply with applicable Code. Refer to Drawing for additional requirements.
    c. Miscellaneous Systems Valves: See DRAWINGS. Select from System appropriate TYPE, materials, function.

C. Related Work Specified Under Other Sections
   1. Division 15 Section “General Mechanical Requirements.”
   2. Division 15 Section “Underground Piping Systems.”
   3. Division 15 Section “Valves.”
   4. Division 15 Section “Piping Specialties.”
   5. Division 15 Section “Pumping Equipment.”
   6. Division 15 Section “Thermal Insulation.”
   7. Division 15 Section “Compressed Air Equipment.”
   8. Division 15 Section “Chemical Water Treatment.”
   9. Division 15 Section “Plumbing.”
   10. Division 15 Section “Steam and Condensate Specialties and Equipment.”
   11. Division 15 Section “Atmospheric Cooling Equipment.”
   12. Division 15 Section “Environmental Equipment.”
   13. Division 13 Sections for Instrumentation and Control Work.
   14. Division 16 Sections for Electrical Work.
   15. Division 09 Sections for Finish Field Painting.

1.2 QUALITY ASSURANCE

A. Refer to Division 15 Section “General Mechanical Requirements” for applicable requirements.

1.3 SUBMITTALS

A. Refer to Division 15 Section “General Mechanical Requirements” for applicable requirements.

B. Include piping system layout drawings, piping sizes, calculations and coefficients used, materials and equipment classification and identification, component pressure/temperature rating, piping and equipment supports and restraints, special installation requirements, catalogue data and other data necessary to verify compliance with CONTRACT DOCUMENTS.

C. Submit proposed proprietary supplementary structural members application.

D. Fabricate mock-ups where specified or required.

E. Submit proposed connections to building structure.

F. *Test or Inspection Reports [T]:* Submit copies of structural integrity, leakage and performance and acceptance test data.

1.4 OPERATING AND MAINTENANCE PERSONNEL TRAINING

A. Refer to Division 15 Section “General Mechanical Requirements” for applicable requirements.

1.5 PROJECT CONDITIONS

A. Refer to Division 15 Section “General Mechanical Requirements” for applicable requirements.

1.6 GUARANTEE/WARRANTY

A. Refer to Division 15 Section “General Mechanical Requirements” for applicable requirements.

PART 2 PRODUCTS

2.1 GENERAL

A. Piping systems materials: Piping systems materials which are not manufactured in the U.S.A. shall be identified as such.

B. *Bill of Materials [B]:* Submit source identification with bill of materials including documentation of compliance with specified criteria. Such materials shall be subject to testing sufficient to confirm compliance, as may be deemed necessary by the OWNER, and in the event of non-compliance, to subsequent removal/replacement, all, including testing, at no additional cost to the OWNER.

C. Internally corroded pipe will be rejected.

D. Refer to Division 15 Section “General Mechanical Requirements” for additional product requirements.

2.2 STEEL PIPE AND FITTINGS

A. Type BCS-150, Black Carbon Steel System

1. Pipe:

1/8 thru 3	Schedule 40 or Schedule 80 black carbon steel; ASTM A 53, Type E.
4 thru 10	Schedule 40 black carbon steel; ASTM A 53, Grade B, Type E or S.
12 thru 26	0.375 inch wall, black carbon steel; ASTM A 53, Grade B, Type E or S.
28 and larger	0.375 inch wall, black carbon steel; API 5L, Grade B, Type E or S, with mill varnish.

2. Screwed couplings:

1/8 thru 2	Extra heavy tapered thread black carbon steel.

3. Screwed unions:

1/8 thru 2	Class 300 female screwed malleable iron with ground joint and brass to iron seat, ANSI B16.39.

4. Welded unions:

1/8 thru 1-1/2	2000 or 3000 PSI WOG, AAR, forged steel socket weld; ASTM A 105, Grade II and ANSI B16.11.

5. Flanges:

2-1/2 and up	1. Class 150 or 300 RF forged steel slip-on or welding neck to match pipe wall thickness and valve flanges; ANSI B16.5 thru 24 inches; MS SP-44 for sizes over 24 inches. 2. For large diameter flanges, AWWA/ANSI to 144-inches; CM Flanges 800-435-2643; PEK 800-648-9597; CAB 404-934-3101.
6. Flanges, Orifice:	Class 300 forged steel, welding neck, to match pipe wall thickness, drilled, tapped, ANSI B16.36.
7. Screwed fittings:	
1/8 thru 2	Class 150 WSP banded malleable iron screwed; ASTM A 197 and ANSI B16.3 rated 150 PSI at 350 degF and 300 PSI at 150 degF non-shock.
8. Welding fittings:	Steel butt weld to match pipe wall thickness; ASTM A 234 and ANSI B16.9. Weldolets are permitted up to 2/3 run size.
9. Socket fittings:	Forged steel; ASTM A 105, Grade II and ANSI B16.11, to match pipe wall thickness.
10. Bolts:	High strength, except where joining cast iron.

B. Type BCS-LPS, Black Carbon Steel System

1. Pipe:

1/8 thru 1	Schedule 80 black carbon steel; ASTM A 106, Grade B, Type S.
1-1/4 and larger	Schedule 40 black carbon steel; ASTM A 106, Grade B, Type S.
2. Screwed couplings:	
1/8 thru 2	Extra heavy tapered thread black carbon steel.
3. Screwed unions:	
1/8 thru 2	150 PSI WSP Female screwed bronze-to-iron ground joint seat, conforming to ANSI B 16.4. a. Grinnell, Fig. 463.
4. Flanges:	
2-1/2 and up	Class 150 RF conforming to ASTM A 105 and ANSI B16.5.
5. Screwed fittings:	
1/8 thru 5	125 PSI WSP banded cast iron screwed; ANSI B16.4.
6. Welding fittings:	
2-1/2 and up	Steel butt weld to match pipe wall thickness; ASTM A 234 and ANSI B16.9. Weldolets are permitted up to 2/3 of run size, extra strong class butt welding end connection, ASTM A 105 Grade II.
7. Bolts:	High strength.

C. Type BCS-IPS, Black Carbon Steel System

1. Pipe:

1/8 thru 2	Schedule 80 black carbon steel; ASTM A 106, Grade B, Type S.
2-1/2 and larger	Schedule 40 steam service and Schedule 80 condensate service, black carbon steel; ASTM A 53, Grade B, Type S.

2. Welded unions:

1/8 thru 1-1/2	2000 PSI WOG, AAR, forged steel socket weld; ASTM A 105, Grade II and ANSI B16.11.

3. Flanges:

2-1/2 and up	Class 150 RF conforming to ASTM A 105 and ANSI B16.5.

4. Welding fittings:

Up to 2	Class 3000 PSI forged steel, socket weld; ASTM A 105, Grade II and ANSI B16.11.
2-1/2 and up	Steel butt weld to match pipe wall thickness; ASTM A 234 and ANSI B16.9. Weldolets are permitted up to 2/3 of run size, extra strong class butt welding end connection, ASTM A 105 Grade II.

5. Bolts: High strength.

D. Type GCS-150, Galvanized Carbon Steel System

1. Pipe:	Schedule 40 galvanized carbon steel; ASTM A 53.
2. Screwed Fittings:	Class 150 banded galvanized malleable iron screwed; ASTM A 197 and ANSI B16.3.
3. Screwed Unions:	Class 300 female screwed malleable iron with ground joint and brass to iron seat, ANSI B16.39
4. Fittings:	
2-1/2 and up	Class 125 cast iron flanged fittings; ASTM A 126, Class A and ANSI B16.1.
5. Flanges:	Class 150 flat or raised face as required, forged steel, screwed, ANSI B16.5.
6. Special requirements	For cold water service, clean damaged galvanized surfaces oil-free with solvent and touch-up with a zinc rich coating or Type “A” primer.

E. Type GCS-DWV, Galvanized Carbon Steel Drainage System

1. Pipe:	Schedule 40 galvanized carbon steel, ASTM A 53.
2. Fittings:	Recessed pattern, cast iron, screwed, ANSI B16.12 or Class 125 cast iron flanges and flanged fittings, ASTM A 126, Class A, ANSI B16.1. 1. At the CONTRACTOR’S option for storm service, mechanically coupled grooved type. a. Victaulic. b. Grukvlok.

2.3 CAST IRON PIPE AND FITTINGS

A. Type CISP, Cast Iron Soil Pipe
   1. Pipe and fittings: Service weight pipe per ASTM A 74.
   2. *Elastomer gaskets [P]:* Per ASTM C 564.

B. Type CISP-H, Cast Iron Soil Pipe - Hubless
   1. Pipe and fittings: Hubless per ASTM A 888 and CISPI 301, service weight pipe coated inside and outside with coal tar enamel. Pipe with eccentrically cast, thin walls will not be accepted.
   2. Joint: Conforming to CISPI 301 and ASTM A 888 use of a neoprene sleeve and two stainless steel clamps per joint.

2.4 COPPER PIPE AND FITTINGS

A. Type CPR-BJ, Copper Brazed Joint System

1. Tubing:	Type L seamless copper tubing; ASTM B 88 hard drawn. Annealed Type K; ASTM B 88 where indicated on the DRAWINGS.
2. Pipe Nipples:	Schedule 40 Red Brass or Copper.
3. Brazing fittings:	150 PSI wrought copper socket joint; ANSI B16.22. Cup depths and tolerances per MIL F-1183.
4. Unions:	150 PSI wrought copper socket joint; ANSI B16.22. Cup depths and tolerances per MIL F-1183.
5. Flared fittings:	45 degree flared forged brass; ANSI B70.1. a. Imperial-Eastman. b. Crawford. c. Parker-Hannifin.
6. Flanges:	Class 150 or Class 300 socket joint bronze ANSI B16.24.

B. Type CPR-SJ, Copper Solder Joint System

1. Tubing:	Type L seamless copper tubing, ASTM B 88. Hard drawn for horizontal and exposed vertical lines. Annealed or acceptable for small concealed lines.
2. Solder fittings:	150 PSI wrought copper solder joint type, ANSI B16.22. a. Mueller Brass “Streamline”. b. Nibco, Inc.
3. Flared fittings:	Cast bronze, ANSI B16.26; forged brass, ANSI B70.1. a. Imperial-Eastman. b. Nibco, Inc.

4. Compression fittings: Sleeve compression type, brass.
    a. Crawford “Swagelok”.
    b. Imperial-Eastman “Hi-Duty”.
    c. Parker-Hannifin “CPI”.
5. Pipe nipples: Schedule 40 Red brass or copper.
6. Flanges: Class 150 PSI WSP solder joint, ANSI B16.24.

2.5 PLASTIC PIPE AND FITTINGS

A. Type PVC, Polyvinyl Chloride Piping Systems
1. Schedule 80 ASTM D-1785/Type 1 pipe and ASTM D-2467 socket joint fittings/flanges.
2. Provide flanges where. specified; required; indicated; at all transitions to other piping materials. Provide service/duty required gasket materials. Use ANSI Class 150 drilling steel flange backing rings for all flanges, of 1/8 thru 1/2-inch thickness, as required by flange size and as manufactured by. Chicago Rolled Products (312-523-5757); National Metal Fabricators (312-439-5321/800-323-8849); Felker Alloy Products (715-384-3121); CONTRACTOR fabricated.
3. Primer and solvent cement shall be provided by pipe supplier.

B. Type PVC-DWV, Polyvinyl Chloride Drainage System
1. 1. Pipe, Fittings and Joining Materials: Per ASTM D 2665.
    a. a. Chemtrol.
    b. b. Genova.
    c. c. Spears.

2.6 STAINLESS STEEL PIPE AND FITTINGS

A. Type SS-304L
1. Pipe: Schedule 40S, stainless steel, ASTM A 312, Grade 304L, ANSI B36.19, seamless.
2. Welding fittings:
All sizes: Stainless steel, butt weld, long radius, ASTM A 403, WP 304L, ANSI B16.9, B36.19 to match pipe wall thickness.

2.7 PIPE SUPPORTING ELEMENTS

A. General
1. Furnish supporting elements per ANSI B31.1 with Addenda, MSS SP-58, and MSS SP-69, except as otherwise modified and supplemented herein. Supporting elements, including structural members, rods, threaded fasteners, “U” bolts, etc., exposed to weather shall be hot dip galvanized after fabrication. Stainless steel components are acceptable in lieu of hot-dip galvanized carbon steel. Use of raw carbon steel fasteners in weather exposed locations is prohibited. Copper piping or tubing shall be isolated from supports by plastisol coatings or rubber or plastic insert. Pre-insulated supports exposed to weather shall have a weatherproof jacket.

B. Designation And Manufacturers

1. "TYPE" designations are based on MSS SP-58 and MSS SP-69. Support elements, except for mill rolled supplementary steel, shall be catalogued, load rated, commercially manufactured products. Refer to following "MANUFACTURER'S EQUIVALENTS" for additional information relative to "TYPE" and models.

C. Building Structure Attachments

1. Anchor Devices, Concrete and Masonry: Per Group 1, Group II, TYPE 2, Class 2, Style 1 and Style 2, Group III and Group VIII of FS FF-S-325A. Furnish cast-in floor type equipment anchor devices with adjustable positions. Furnish built in anchor devices for masonry.
2. Beam Clamps: Center loading TYPE 21, 28, 29, and 30, unless otherwise specified or indicated. When it is determined by the OWNER that it is not possible to use center loading beam clamps, eccentric loading beam clamps, TYPE 20, 25, and 27 may be used within the following limitations. for loads equivalent to water piping sizes 2 inches and less; for loads equivalent to water piping sizes 2 inch through 10 inch provided two counterbalancing clamps are used per point of pipe support and pipe is mounted on trapeze. Where more than one rod is used per point of support, determine rod diameter per referenced standards. Miscellaneous structural steel, cantilevered from a structural beam in order to support piping, is prohibited.
3. "C" Clamps. Use of "C" clamps and beam clamps of "C" pattern and any modification thereof is prohibited.

D. Horizontal Pipe Attachments

1. SINGLE PIPES
   a. General Determination of Hanger Types:
      1) Where horizontal thermal movement at point of support does not exceed one inch. Use combination TYPE 1 attachment and TYPE 40 protection shield, for insulated cold piping; use TYPE 3 attachment, clamped directly to pipe, for insulated hot piping; use TYPE 1, TYPE 3, or TYPE 4 attachment for insulated bare piping.
      2) Where horizontal thermal movement at point of support exceeds one inch, hanger components, including weldless eye nuts, shall be selected to allow swing of the hanger rod. Use TYPE 3 attachment clamped directly to pipe, or combination TYPE 41 attachment and TYPE 39 protection saddle for insulated hot piping. Use combination TYPE 4 attachment and 360 degree protection shield for insulated cold piping. Use TYPE 4 attachment for bare piping.
      3) Where horizontal thermal movement at point of connection exceeds two inches, pre-set positions of pipe clamp and structural attachments to allow equal swing of the hanger rod, either side of vertical, from the cold position to the hot position.
      4) Where axial thermal movement at point of support would cause a hanger rod to swing more than 4 degrees from vertical, or where thermal movement exceeds 5 inches, a TYPE 58 overhead roller traveling device with antifriction bearings (device shall be welded to miscellaneous steel) or a roller hanger shall be used. Roller hangers for 6 inch pipe and under shall be TYPE 43 with swivel. Roller

hangers for 8 inch pipe size and larger shall be TYPE 41. Do not use fixed rollers where lateral pipe movement occurs.

5) Provide TYPE 39 insulation protection saddles, minimum of 12 inches long, for hot insulated pipe on rollers. Tack weld saddle to pipe.
6) For roller support of cold insulated piping, provide pre-insulated supports with integral shield and vapor barrier. Shield thickness and length shall be suitable for point loading roller application.
7) TYPE 39 protection saddles, and integral insulation shields shall have a length sufficient to keep the rolling point of contact at least 2-1/2 inches from either end of the saddle or shield.

b. Supports for insulated and continuously vapor-barrier sealed cold piping.
   1) Support 2 inch and smaller insulated and vapor sealed lines by manufacturer's standard TYPE 40 insulation protection shields applied under the specified pipe insulation.
      a) Anvil International Fig. 167.
      b) Bergen-Power. Fig. 136.
   2) Support cold vapor sealed piping 2-1/2 inch and over, except as otherwise indicated on the DRAWINGS, by a combination TYPE 1 or 3, pipe attachment and asbestos free pre-insulated pipe support with vapor barrier, integral shield, and load rated for the design load. Insert shall be 180 or 360 degree high density molded polyurethane foam with compressive strength/length required to carry imposed load, with safety factor for possible unloaded supported.. The length and compressive strength of the insert, in conjunction with the insulation shield, shall be sufficient to support the pipe at the specified span with not more than 5% deformation and with a safety factor for a possible unloaded adjacent support, without crushing of the insert or breeching of vapor barrier continuity.. The approved manufacturers of cold pipe hanger supports for each type of pipe attachment, are as follows:
   3) For use with the TYPE 1 pipe attachment, use the 180 degree insert with shield, or use the 360 degree insert with 180 degree shield, unless otherwise shown on the DRAWINGS:
      a) Bergen-Power Powerfoam Hanger No. 9052 for 180 degrees, No. 9053 for 360° degrees.
      b) Pipe Shields, Inc. with TYPE 1 hanger as follows:
         - 3 inch and 4 inch Pipe Size Model A 2000
         - 6 inch Pipe Size Model A 4000
         - 8 inch Pipe Size Model A 9000
      c) Pipe Shields, Inc. with TYPE 4 pipe attachment, Model D 3000 Series, instead of TYPE 1 pipe attachment, is acceptable for pipe sizes 5 inches and over.
      d) Rilco Mfg. Co. Inc. with TYPE 1 hanger as follows:
         - 3 inch and 4 inch Pipe Size Model HC 2000.
         - 6 inch Pipe Size Model HC 4000
         - 8 inch Pipe Size Model HC 9000

4) For use with TYPE 3 or TYPE 4 pipe attachment, use the 180 degree insert with shield on both the top and the bottom of the pipe, as follows:
   a) Bergen-Power 180 degree Powerfoam Unit No. 9050 for each top and bottom.
   b) Pipe Shields, Inc.
      - 1/2 inch - 4 inch Pipe Size Model D 2000 Series
      - 5 inch and over Pipe Size Model D 3000 Series
   c) Rilco Mfg., Co. Inc.
      - 1/2 inch - 4 inch Pipe Size Model HH 2000 Series
      - 5 inch and over Pipe Size Model HH 3000 Series

c. Use spring supports as Scheduled and shown on the DRAWINGS.
   1) Variable spring hangers shall not be loaded to more than 75% of published load rating, and shall not exceed 25% allowable load change variability per referenced MSS Standards SP-69 Table No. 2
   2) Provide spring supports with overload stops for hydrostatically tested piping including (liquid,) gas, vapor, or vacuum piping.
   3) Spring supports for steam lines shall be based on empty pipe plus insulation. The spring container, attachments, and rod size shall be based on the weight during hydrostatic test.

2. PARALLEL AND SINGLE PIPES
   a. Fabricate trapeze hangers from approved structural steel shapes per "SUPPLEMENTARY STEEL" requirements or use of commercially available, proprietary design, rolled steel. Refer to applicable requirements for "SINGLE PIPES". 360 degree shields or other approved may be used on trapeze where TYPE 24 "U" bolts are indicated. Refer to details on the DRAWINGS.

E. Vertical Pipe Attachments
   1. TYPE 42 or spring type to meet system requirements.

F. Sliding/Guiding Devices
   1. General:
      a. Furnish pre-engineered commercially available products with published load ratings.
      b. For outdoor weather exposed shoe type supports and for indoor shoe type supports for hot pipes, provide 25% glass filled teflon members (bonded to steel mounting plate) in sliding contact with AISI TYPE 300 Series stainless steel, except where the DRAWINGS specifically indicate graphite to graphite plates. The horizontal stainless steel surface shall be designed to prevent scoring and damaging the teflon slide surface. For guide shoes, the mounting plate shall incorporate factory installed lateral and vertical restraint devices. Protect assembly from dirt and freezing water intrusion, and prevent line contact of sliding surfaces. For pipe temperatures above 366 degF, mechanically bond the teflon (or graphite) members to the steel plate in addition to using high temperature bonding adhesive.
      c. Material and design for support shoes shall be as follows:
         1) Slide Metal: AISI TYPE 304 stainless steel with No. 2B finish.

2) Slide Pad: 25% glass filed teflon for dimensional stability and resistance to wear. The pad sizes and thickness shall be as determined by the manufacturer to meet the design requirements.
3) Sliding base shall totally cover supporting contact surface in all positions of thermal movement except for lateral sliding supports.
4) Compressive load on teflon pad shall not exceed 350 PSI, and shall be at least 75 PSI. Units which have a lateral movement in excess of ± 1/2 inch; and pipes 2-1/2 inches and smaller do not require a minimum loading.
5) Attaching hardware and protective coatings for outdoor service shall be as specified in the opening general statement of Article "PIPE SUPPORTING ELEMENTS".

d. Unless otherwise noted, support shoes indoors and outdoors shall be welded to the pipe per support detail types G4, G4A, G5 and G5A.
e. Non guided support shoes for domestic water and non potable water shall be type G2A (with shoe welded to the insulation shield.) Guide support shoes shall be type G4 (with shoe welded to the pipe.)
f. Cold and ambient indoor support shoes shall omit the weather proof jacket and the stainless steel to teflon or graphite to graphite sliding plates. The greased metal shoe plate will slide directly on the structural steel (or miscellaneous steel.) The sliding surfaces shall be lubricated with a molybdenum disulfide grease such as Dow Corning Co. BR2-PLUS.

2. Outdoor, weather exposed shoe supports, and indoor shoe supports for hot pipe.
   a. Use support details type G4, G4A, G5 and G5A, with stainless steel sliding on teflon.
   b. Indoor Hot Pipes:
      1) Same as specified for outdoor weather exposed supports with support shoe welded to the pipe, except that weather proof jacket is not required.
      2) As an alternate for straight runs of indoor pipe where lateral movement is 1/2" or less, pipe may be supported by pipe roller stands installed underneath type 39 insulation protection saddles.
   c. Where vapor sealed pipes are welded to support shoes, such as types 4, 4A, 5 and 5A insulate and vapor seal per detail G-7 as follows:
      1) Fill shoe cavities with foamed-in-place polyurethane.
      2) Insulate the shoe surfaces and contiguous pipe with cellular elastomer to match the thickness of the adjacent pipe insulation.
      3) The cellular elastomer shall be installed with adhesive on 100% basis.
      4) Apply a 4" wide by 3/8" thick closure strip of elastomer over the abutting insulation materials.
      5) Refer to Division 15 Section "Thermal Insulation" for additional vapor barrier continuity requirements.
   d. Manufacturer:
      1) Bergen-Power, Unislide.
      2) Advanced Thermal Systems Co.
3. Where shoe support detail type G2 or G2A is indicated on the drawings:
   a. The insulated shield portion of the support shall consist of two 180 degree high density asbestos free insulation halves with necessary insulating structural inserts to meet the design loads of Table II. The manufacturer shall provide a vapor barrier, a

galvanized steel weathertight insulation jacket, and a 360 degree galvanized steel outer shield. No metal contact heat path from pipe to outer surface of insulation is permitted. The weathertight jacket shall extend 1” beyond the shield. The vapor barrier shall extend 2” beyond the shield. The shield shall be clamped tight and clamping bolts shall be torqued to the manufacturers recommendations to fully force the rigid insulation against the pipe.

b. A structural support shoe with a stainless steel horizontal sliding surface shall be welded to the clamps or to the outer shield.

4. Insulation for pre-insulated pipe supports:
   a. Structural Inserts. asbestos-free, water-resistant, very high-density, high-strength (min. 600 PSI compressive strength) calcium silicate, or manufacturer’s high density molded rigid polyurethane foam with a minimum density of 10 lbs./cu. ft.
   b. All other insulation. asbestos-free, water-resistant, molded high-density (13 lbs/ft3) calcium silicate, or rigid molded polyurethane foam.
5. Adhesive for bonding insulation to jacket. High-performance, structural, industrial contact cement (minimum peel strength 23 lbs. per inch of width after 3 weeks at 75 degF).
6. For other materials, refer to the General statements for sliding/guiding devices.
7. Manufacture:
   a. Pipe Shields, Inc., Model “B” Series.
   b. Bergen-Power., Unislide No. 7420-T & 7460-T.
   c. Rilco Mfg., Co. Inc., HS and HG.
8. For uninsulated and insulated hot piping systems where the support shoe is indicated on the DRAWINGS as welded to the pipe or to the pipe reinforcing pad, furnish pre-engineered commercially available products with published load ratings constructed to include 25% glass filled teflon members in sliding contact with AISI TYPE 300 Series stainless steel. Protect assembly from dirt and prevent contact of sliding structural surfaces.
   a. Bergen-Power, Unislide.
   b. Pipe Shields, Inc., Powerslide.
   c. Rilco Mfg., Co. Inc., Low Friction.

G. Hanger Rods And Fixtures
1. Use only circular cross-section rod hangers to connect building structure attachments to pipe support devices.
2. Furnish turnbuckles, weldless eye nuts and clevises. Rod couplings are not acceptable. All screwed and equivalent adjustments shall be provided with suitable locking devices.
3. Manufacturer’s Equivalents
   a. Pipe Hangers and Spring Supports:
      1) Carpenter & Paterson.
      2) Anvil International.
      3) B-Line.
      4) Michigan Hanger.
      5) Rilco Mfg. Co. Inc.
   b. Pre-insulated Hanger Supports with Vapor Barrier as specified above:
      1) Bergen-Power.
      2) Pipe Shields Inc.

3) Rilco Mfg. Co. Inc.

4. The following tabulation is for information; it does not include provisions for variations in load carrying capacity or application variations. Equivalent units per the previously noted acceptable manufacturers may be used.

SUPPORTING ELEMENT EQUIVALENTS

MSS-SP-58	GRINNELL-ANVIL INTERNATIONAL	CARPENTER & PATERSON	RILCO	POWER PIPING
1	260	100	380	11
3	295	304	310	222
8	261	126	360	36
20	225	45	132	--
21	134	15	128	41
25	227	18	135	--
28	292	297	141/142	--
30	229	82,293	--	--
41	171	142	545	--
44	271	17	500	18
49	178	478	550	180
50	296	--	830	1700

5. Alignment Guides: Factory fabricated unit consisting of a bolted spider and a bolted guiding cylinder with supporting legs welded to pipe support.
   a. Bergen-Paterson, Inc.
   b. Carpenter & Paterson.
   c. Anvil International.
   d. NPS Industries
   e. Power Piping Co.
   f. Pipe Shields.

H. Supplementary Steel
1. Supplementary steel: Design and fabricate per the American Institute of Steel Construction Specification for the Design, Fabrication and Erection of Structural Steel for Buildings.
2. Shop or field prime coat for interior to building spaces and hot dip galvanize, normally after fabrication, for exterior to building services.
3. Prefabricated, pre-engineered steelwork fixings to securely affix supplementary steel to building without drilling or welding of building steel.
   a. Lindapter.
   b. Other approved.

I. Proprietary Supplementary Structural Members
1. *Prefabricated or Pre-Engineered Channel (Strut) Framing Systems [D,P]:* When proposed in lieu of supplementary steel, submit proposed application for approval.
   a. Unistrut.
   b. Globe Strut.
   c. Superstrut.

d. Hilti.

PART 3 EXECUTION

3.1 GENERAL

A. Execute the WORK in compliance with Division 15 Section “General Mechanical Requirements .”

3.2 PIPING SYSTEMS INSTALLATION

A. General
1. Construct piping systems in accordance with ANSI B31.1 latest edition and supplementary requirements specified herein.
2. Install off-ground pipe storage and pipe cleaning stations acceptable to OWNER, comprised of cleaning means/devices which include punch-out brushes; high pressure compressed air lances; high pressure water (to 30,000 psi). The objectives are to install piping systems so clean that WORK under Article “Field Quality Control” and resultant waste water is minimized and such that OWNER rejection of dirty installation work is simultaneously minimized. Need for pipe cleaning station may be minimized upon OWNER approval if fresh mill-run and end-sealed pipe is furnished.

B. Fabrication, Assembly, Erection
1. Clean pipe, tubing, fittings, valves, equipment and accessories of extraneous foreign material and dry the components before installation into their respective systems. During construction, protect open ends of pipe, fittings and valves to prevent the admission of foreign matter. Place plugs in the ends of installed work at the end of the day and whenever work stops. Use commercially manufactured plugs. Fabricate pipe to measurements established on the project site; work pipe into place without springing or forcing. Provide for absorbing movement without undue stress in any part of the system.
2. Install piping straight and true, with approved offsets to increase headroom and avoid obstructions. Pipe installation shall clear electrical bus ducts by 4’-0” unless otherwise approved. Provide shielding/pans where crossing over electrical bus ducts and specified drainage and venting where piping offsets are required.
3. Use standard long sweep pipe fittings for changes in direction. No mitered joints or field fabricated pipe bends will be permitted. Short radius elbows may be used where specified or specifically authorized by the ARCHITECT-ENGINEER. Copper tubing may be bent in the field with the use of approved tube bending equipment.
4. Make tee connections with screwed tee fittings or specified welded connections. Make welded branch connections with either welding tees or forged branch outlet fittings per ASTM A 105, ANSI B16.9 and ANSI B16.11. For forged branch outlets, furnish forged fittings flared for improved flow where attached to the run, reinforced against external strains and to full pipe-bursting strength requirements. “Fishmouth” or “Saddled-In” connections are not acceptable.
5. Take off branches from mains at an angle of 45 degrees or 90 degrees above horizontal, unless otherwise indicated. Pitch up branches taken from the tops of mains, pitch down

those taken from the bottom of the mains. Make connections to eliminate air pockets, insure unrestricted circulation and complete drainage of the system.

6. Provide unions or bolted flanges to permit removal of equipment, valves and piping accessories from the piping system. Make final connections to equipment with unions or flanges located between equipment and valves.
7. Use eccentric reducers for drainage and venting of pipe lines; bushings are not permitted.
8. Expansion bend configuration shall be as indicated. Make expansion U-bends from pipe sections and long radius welding elbows. Cold spring expansion bends with indicated cold spring and weld into the line, which shall be anchored before removing the spreader from the expansion U-bend.
9. Upon prior approval and within systems limitations, make pipe bends of Grade A seamless, or where approved of electric resistance welded pipe, of not less than five pipe diameters radius by cold bending with hydraulic benders for pipe sized to 4 inch NPS. Bent pipe with wrinkles, kinks, flattening, wall thickness variation and other defects will be rejected.
10. Anchor rain conductors to building structure near roof drain to protect roof drain from pipe expansion stresses.
11. Horizontal piping containing liquids and vapors condensable at system ambient conditions shall have a grade of 1 inch per 40 feet.
12. Horizontal piping containing noncondensable gases shall have a grade of 1 inch per 100 feet.
13. Slope horizontal drain and waste piping in the direction of flow not less than minimum grade required by applicable code.

C. Joints

1. Ream pipe ends. Make up screwed joints with joint compound. Apply joint compound to the male thread only; prevent compound from reaching the interior of the pipe. Provide leak-tight joints without stressing fittings.
2. Where required, make up screwed joints with Teflon tape per manufacturer's instructions.
3. Assemble flanged joints per ANSI/ASME B31.1, ANSI/ASME B16.5 and NFPA 30, 50, 51, 58, as applicable. Clean all flange serrations of leak causing filler and inspect for damage. Assemble flanged joints with fresh-stock gasket and specified hex head nuts, bolts or studs. Make clearance between flange faces such that the connections can be gasketed and bolted tight without strain on the piping system. Align flange faces parallel and bores concentric; center gaskets on the flange faces without projection into the bore. Apply graphite to both sides of steam piping joint gaskets. Use 1/16 inch sheet gasket, except as otherwise specified.
4. Use high strength bolting ASTM A 193/194, per ANSI B31.1 TABLE 108.52 preferentially to ASTM A307 general service bolting except where ANSI B16.1 Class 125 and special case Class 250 cast iron flanges occur. Use stainless steel bolting with specified corrosion resistant system. Lubricate carbon steel bolts with oil and graphite before assembly to insure uniform bolt stressing. Draw up and tighten bolts in staggered sequence to prevent unequal gasket compression and deformation of the flanges. Do not mate a flange with a raised face to a companion flange with a flat face; machine the raised face down to a smooth matching surface and use a full face gasket. After the piping system

has been tested and is in service at its maximum temperature, check bolting torque to provide required gasket stress.

5. Use professional quality torque wrenches to confirm/develop required gasket stress initially. If it is necessary to use 1/8” thick gasket, increase torque by nominal 30%. Retorquing a used heated or leaking gasket may cause cracking. Use high strength bolting as specified.
6. Cut copper tubing square for socket joints; remove burrs with approved cutting and reaming tools. Clean inside of fittings and outside surfaces of tubes in joint area with stainless steel wool before assembly of joint. Apply joint flux, filler material and heat source per manufacturer’s instructions to provide proper capillary action to fill the socket space and to achieve 100 percent of shear-line strength. For non-flanged valves in copper piping include screwed ends with end adapters to suit mechanical connections, unless filler jointing is specified or indicated for a given application. Remake copper joints which fail pressure tests with new materials including pipe or tubing fittings and filler metal.
7. Cut copper tubing square for mechanical joints; remove burrs with approved cutting and reaming tools. Do not work-harden copper surfaces; in case of doubt, cut off tube ends or anneal ends by heating to a temperature and air cooling per manufacturer’s instructions.
8. Make joints in thermoplastic and thermoset plastic piping per manufacturer’s instructions, except as more stringently required herein.

D. Joints Of Dissimilar Metals

1. At connections between piping systems, hangers and equipment of dissimilar metals, insulate, using dielectric insulating material, nonferrous piping against direct contact with the building steel by insulating the contact point of the hanger and pipe or the hanger and building steel. Test each point of dielectric insulation with an ohmmeter to insure proper isolation of dissimilar materials. Test shall be observed by the ARCHITECT-ENGINEER.

E. Joints - Welded/Brazed

1. Welding/brazing procedures and welder/brazer qualification, testing and certification shall comply with the latest revisions of all applicable ASME Boiler and Pressure Vessel Codes, Section 1 and ANSI/ASME Codes, B31 series.
2. Before any welding or brazing is performed, submit to the OWNER a copy of CONTRACTOR’S Standard (PQR) Welding/Brazing Procedure Specification (WPS)/(BPS) together with the related Procedure Qualification Record as required by Section IX of the ASME Boiler and Pressure Vessel Code. Exception. At the OWNER’S option, OWNER will furnish the Welding Procedure Specification and Procedure Qualification Requirements.
3. Before any welding/brazing is performed, submit to the OWNER a copy of the Welding Test or Welder/Brazer Performance Operator Qualification (WPQ)/(BPQ) Test as required by Section IX of the ASME Boiler and Pressure Vessel Code and in compliance with QW-320/QB-320 for currency of certification. Exception. At the OWNER’S option, OWNER will conduct Welding/Brazing Test or Welder/Brazer Operator Qualification Tests.
4. Each party performing welding shall be responsible for the quality of welding/brazing done by his organization and shall repair or replace any work not in accordance with these specifications.

F. Instrument And Piping Specialty Connections
   1. Install pressure sensing device connections, temperature sensing device thermal wells and similar piping specialty connections with full size fitting, reducer fitting, or welding coupling. Drilling and tapping of pipe wall for connections is prohibited.
   2. For Division 13 SECTIONS I & C Work, provide instrument connections, except thermal wells, with specified isolating valves at the point of connection to the system. For I & C work temperature sensors, provide connection fitting only. plug for testing.
   3. Locate instrument connections per manufacturer's instructions for accurate read-out of function sensed. Locate instruments for easy reading from normal operating levels.
   4. Provide pigtails for steam pressure gauges. Use pipe or flexible tubing and fittings on remote pressure gauge connections. Tubing shall be pressure rated copper with nonferrous fittings. Provide bar stock needle shut-off valves or pulsation dampeners as specified or indicated.

G. Type CISP, Cast Iron Soil Pipe
   1. Install per CISPI Cast Iron Soil Pipe and Fittings Handbook except as modified by the CONTRACT DOCUMENTS.

H. Type CISP-H, Cast Iron Soil Pipe
   1. Install per CISPI Cast Iron Soil Pipe and Fittings Handbook except as modified by the CONTRACT DOCUMENTS.
   2. Make joints using neoprene sleeve and stainless steel clamps per manufacturer's instructions to produce a liquid-tight joint without stressing sleeve.

I. Grooved Couplings And Fittings
   1. Use grooved couplings and fittings only in specified piping systems and where shown on the DRAWINGS. Select manufacturer's recommended gaskets for the service.
   2. Provide flexible couplings as shown. Grooved system components shall be obtained from a single manufacturing source. At pumps, provide welded piping joints, unless otherwise approved.

J. Air Vents
   1. Install air vent valves at all pressurized liquid piping systems and equipment water box high points and where indicated.
   2. Provide automatic air vent valves with isolation valves in condenser water box, water lines, except potable water lines, and drainage piping to points indicated or to points of disposal approved by the authorities having jurisdiction. Other vents shall be manual type installed in easily accessible locations.

K. Drain Valves
   1. Provide drain valves at piping systems low points, and at base of risers.

L. Piping Drips
   1. Provide drips at system low points. Use full line size to 4 inch NPS and not less than 6 inch for lines 6 inches NPS and larger.

2. Fit drips with plugged-end valve. For natural gas (and) (propane) (indicated piping) fit drips with plugs or end caps. Provide moisture traps at low points of compressed air piping.

M. Sleeves/Seals/Flashing

1. Refer to Division 15 Section “Basic Mechanical Material and Methods” for additional requirements. Comply with UL requirements for fire stopping.
2. Lay out sleeve installation work in advance of placing of slabs or construction of walls and set sleeves necessary to the work. Where pipe sleeves are required in existing slabs and masonry, use core drills to make the holes and set sleeves in place with a two-component epoxy adhesive. Plug sleeves indicated for future use.
3. Make sleeves which extend through floors, roofs, load bearing walls and fire barriers, continuous and of diameter large enough to accommodate pipe, insulation and jacketing, with a minimum 1 inch clearance.
4. Sleeves thru steel decks shall be welded with a continuous weld to the deck.
5. Set sleeves flush with walls, under sides of suspended slabs and top surface of floors in finished spaces. Set sleeves flush with walls and 2 inches above finished floor in manufacturing and equipment room spaces, unless otherwise indicated.
6. Seal pipe passing thru aboveground sleeves weathertight with packing and calking. Calk inserts exposed to weather.
7. Where piping passes through fire rated walls and floors, or walls and floors of buildings more than two stories high, fill voids and cavities around wall and floor penetrations with firestopping and smoke sealing materials to maintain the required fire-rated condition of substrate.
8. Pack the space between a pipe, bare or insulated, and the inside of a pipe sleeve or a construction surface penetration. Where a vapor barrier is required, fill the space between a pipe, bare or insulated, and the inside of a pipe sleeve or construction surface penetration with a calk to a depth of 3/8 inches. Clean surfaces to be calked of oil and grease. Cover with a loosely fitting metal collar on both sides of the wall.
9. Where indicated, seal pipe to sleeve with mechanically expandable inserts.
10. Set and extend plumbing vent lead flashing around pipe for a minimum of 6 inches from edge of pipe around the vent pipe for a minimum of 12 inches above the roof. Carry the lead sleeve inside the bottom of an inverted hub connection or vent fitting. Turn in the lead sleeve a minimum of 2 inches at the top of the vent and hammer smooth on the inside.

3.3 SUPPORTING ELEMENTS

A. Installation

1. Provide necessary piping and equipment supporting elements including. building structure attachments; supplementary steel; hanger rods, stanchions and fixtures; vertical pipe attachments; horizontal pipe attachments; anchors; guides; spring supports per the referenced codes, standards, and requirements specified. Support piping and equipment from building structure; not from roof deck, other pipe, duct or equipment.
2. Use copper plated or plastic coated supporting element in contact with copper tubing.
3. Shop or field prime paint or hot dip galvanize supporting element components.

4. Hang piping parallel with the lines of the building, unless otherwise indicated. Space piping and components so a threaded pipe fitting may be removed between adjacent pipes and so there will be not less than 1/2 inch of clear space between finished surfaces and piping. Arrange hangers on adjacent parallel service lines in line with each other.
5. In lieu of separate hangers, trapeze hangers for parallel service systems piping, may be placed on same elevation adjusted for proper pitch. Spacing of trapeze hangers shall be the closest interval required for any size pipe supported. Piping with common support elements shall have compatible support and vibration isolation. To maintain fixed positions on trapeze, provide bracing allowing for varying thermal expansion of each system supported.
6. Piping with pulsating fluid flow shall be supported independently of other piping.
7. Flange loads on connected equipment shall not exceed 75% of maximum allowed by equipment manufacturer. Flange loads in liquid containing systems shall be checked in the presence of the ARCHITECT-ENGINEER when piping is full of liquid. No flange load is allowed on pumps, vibration isolated equipment or flexible connectors.
8. Spring supports, within specified limitations. Constant support type, where significant vertical movement occurs and where necessary to avoid transfer of load from support to support or onto connected equipment; otherwise, variable support type located at points subject to vertical movement.
9. Incorporate pipe anchors into piping systems to maintain permanent pipe positions. Install four alignment guides for the piping adjacent to and on each side of pipe expansion loops and expansion joints to maintain alignment. Construct anchors to secure entire circumference of the pipe.
10. Where necessary, brace piping and supports against reaction, sway and vibration.
11. Install turnbuckles, swing eyes and clevises to accommodate temperature changes, pipe accessibility, and adjustment for load and pitch. Rod couplings are not acceptable.
12. Install hangers and supports for piping at intervals specified, at locations not more than 3 feet from the ends of each runout, and not over 25% of specified interval from each change in direction of piping.
13. Base the load rating for pipe support elements on loads imposed by insulated weight of pipe filled with water. The span deflection shall not exceed slope gradient of pipe. Use Schedule 40 and Schedule 80 ferrous pipe and copper tube supports per the following minimum rod size in inches maximum allowable hanger spacing in feet.

14. For concentrated loads, such as valves, reduce allowable span accordingly.

MAXIMUM ALLOWABLE SPAN

a. PIPE SIZE	ROD SIZE	STEEL PIPE**		COPPER TUBE
		Steam & Liquids	Air & Gasses	
1/2 and smaller	3/8	6	6	6*
3/4 – 1	3/8	7	7	7
1-1/4 - 1-1/2	3/8	8	8	8
2	3/8	12	12	10
2-1/2 – 3	1/2	12	14	12
4 – 5	5/8	14	16	--
6	3/4	16	20	--
8 - 10	7/8	20	24	--
12 and above		As indicated on the DRAWINGS		

* Except where continuous support is specified.

** Bulk mains (fire protection service) using grooved couplings, provide two hangers for each 20 feet of length.

b. CAST IRON PIPE

All sizes	10 feet, but not less than two supports per pipe length.

c. PVC

1-1/2 and larger	Support as recommended by the manufacturer.

15. Support vertical risers independently of connected horizontal piping whenever practical, with supports at the base and at intervals to accommodate system range of load with thermal conditions. Guide for lateral stability. Provide one rigid support for risers subject to expansion at approximately 1/3 point from the top or at base unless otherwise indicated. Fit horizontal piping contiguous to moving risers with two spring supports, spaced immediately adjacent to riser.
16. For risers at temperatures of 100 degF or less place riser clamps under fittings. Support carbon steel pipe at each operating level or floor and at not more than 15-foot intervals for pipe 2 inches and smaller, and at not more than 20 foot intervals for pipe 2-1/2 inches and larger.
17. After the piping systems have been installed, tested and placed in satisfactory operation, firmly tighten hanger rod nut and jam nut and upset threads to prevent movement of fasteners.
18. Attach pipe anchors and pipe alignment guides to the building structure as indicated. If not indicated, the method used is optional to the CONTRACTOR, subject to approval by the ARCHITECT-ENGINEER. In the case of structural steel, make attachment by clamping per the American Institute of Steel Construction Specification for the Design, Fabrication and Erection of Structural Steel for Building.
19. Attach supporting elements connected to structural steel columns to preclude vertical slippage and cascading failure. Column attachment includes compression bolting of

friction plates with a service duty factor of 5 on each flange face. Include on one plate a supported bolting shelf or other weldment for attachment of other supporting system elements. Submit complete shop drawings.

20. Locate pipe hangers and other supporting elements from roof purlins or top chord of jack trusses. Supporting elements shall not be supported from the top chord of roof or carrying trusses except at panel points. Total of all supported loads on a purlin shall be such as to produce a moment no greater than the moment produced by a one kip concentrated load at midspan of the purlin or greater concentrated load as indicated on the structural DRAWINGS. Total of all supported loads on the top chord of a jack truss between panel points shall be such as to produce a moment no greater than the moment produced by the uniform mechanical (utility) loads indicated on the structural DRAWINGS. When the total loads exceed the above criteria, provide additional support beams framed into a roof purlin or jack truss top chord or bearing on the roof or carrying truss top chord panel point. Unless otherwise shown by a structural calculation completed by the CONTRACTOR, purlins used for supporting electrical lighting fixtures and/or electrical power duct or cable tray shall be considered fully loaded and supplemental reinforcing for the purlins or auxiliary support steel shall be furnished and installed by the CONTRACTOR if necessary to utilize those purlins. Reinforcing at building structure shall be approved in writing by the ARCHITECT-ENGINEER.
21. Where eccentric loading beam clamps are approved and where other work is supported by similar eccentric loading support element from the same structural member, locate eccentric loading support elements to minimize structural member torsion load.

B. Pipe Anchors
1. For pipe line service temperatures under 250 degF, fabricate anchors from steel plate or structural shapes.
2. Construct anchors for pipe line service temperatures over 250 degF from piping components such as shaped nipples, saddles and flanges. For main anchors, weld a full size extra strong nipple with or without a saddle to the pipe. For intermediate anchors, weld a 2/3 line size extra strong nipple to the pipe. Weld a 150 PSIG slip-on flange to the bottom of the nipple and set in grout to provide anchor bolt area.

C. Pipe Guides

1. Control expansion joint movement by installing two rigid pipe guides on each side of the expansion joint. Spacing shall be as follows:

Nom. Pipe Size (In.)	Maximum Distance: Exp. Joint to First Guide	Maximum Distance: First to Second Guide	Maximum Distance Between Intermediate Guides (Ft.) for tabulated pressures, PSIG: 50	100	150	200	250	300	350	400
3	1’-0”	3’-6”	21	19	17	16	15	14	13	13
4	1’-4”	4’-8”	35	29	25	22	20	19	18	17
6	2’-0”	7’-0”	57	44	37	32	29	27	25	23
8	2’-8”	9’-4”	66	52	45	40	36	33	31	29
10	3’-4”	11’-8”	91	69	58	51	46	42	39	36
12	4’-0”	14’-0”	107	79	66	58	52	48	44	41

D. Supplementary Steel

1. Where it is necessary to frame structural members between existing members or where structural members are used in lieu of commercially rated supports, install such supplementary steel per the American Institute of Steel Construction Specification for the Design, Fabrication and Erection of Structural Steel for Buildings. Connections to existing steel shall be clamps unless otherwise approved by the ARCHITECT-ENGINEER.
2. Where these members are weather exposed, provide hot dip galvanized after fabrication (HDGAF) construction.

3.4 FIELD QUALITY CONTROL

A. General

1. Refer to Division 15 Section “General Mechanical Requirements.” for additional requirements.

B. Flushing Work

1. GENERAL
   a. Provide temporary and permanent piping, equipment and materials required for flushing work. Coordinate cleaning of connections to existing systems with ARCHITECT-ENGINEER.
   b. If equipment and piping systems are not properly cleaned and flushed, pay for resultant damage, necessary cleaning and flushing of systems to which connection was made and subsequent inspection, at no increase in CONTRACT Sum.
   c. Flush and drain dead ends.
   d. Submit for approval proposed means of disposal of flushing water.
   e. Flush and clean oil system as specified.
2. WATER SYSTEMS FLUSHING
   a. Flush above ground potable water systems after successful hydrostatic and leak testing and cleaning operations per the following procedure:
      1) Open valves and pipe plugs at all system levels.

2) Clean system storage vessels, return tanks, sumps and basins.
3) Protect pumping equipment from damage.
4) Install temporary flushing filters or strainers.
5) Remove or disconnect system items which may be damaged during flushing.
6) Open and close valves to remove debris from body.
7) Drain system, disassemble, inspect, clean, repair and reassemble critical sectionalizing valves, especially gate valves, expansion provisions and permanent and temporary strainers.
8) Adjust control valves.
9) Close-up system for disinfection of specified service.
10) Dewater storage vessels and water heaters. Remove debris and deleterious substances. Inspect and repair equipment used for flushing operations.
11) Remove temporary strainers after systems have been in normal operation for not less than 2 weeks.

C. Disinfection Work
1. GENERAL
a. Under direction of OWNER'S Water Treatment Laboratory, disinfect potable water systems and extension from existing systems connection with an approved chlorine solution as specified, prior to system acceptance in accordance with applicable codes. Apply chlorinated solution at the point of line origin nearest to existing chlorinated supply.
2. MATERIALS
a. Chlorine solution encompasses not less than 50 parts per million (PPM) of available chlorine material composed of chlorine gas, calcium hypochlorite or commercial laundry bleach with minimum 5.25 percent available chlorine.
1) Calcium hypochlorite;
a) "HTH".
b) "Perchloron".
c) "Pittchlor".
2) Laundry bleach:
a) "Clorox".
b) "Roman Cleanser".

MATERIAL REQUIRED FOR 1000 GALLONS OF SOLUTION

SOLUTION STRENGTH	25 PPM	50 PPM	100 PPM
CALCIUM HYPOCHLORITE (LBS)	0.3	0.6	1.2
LAUNDRY BLEACH (GALLONS)	0.5	1.0	2.0

3. PROCEDURES
a. Line being disinfected shall stand for a minimum of 24 hours. Disinfecting solution shall produce no less than 10 PPM chlorine residual at extreme end of line at the end of the retention period. After 24 hours flush out the disinfecting solution until the combined available chlorine residual is less than 1 PPM. Maintain flushing velocity at 6 FPS, unless higher velocities were achieved in previous flushing and unless otherwise approved.
b. Bacteriological count shall be made by the Department of Public Health; if count is within United States Public Health Service Recommendations and local code

requirements, the system may be put into service. Repeat the disinfection process until specified results are obtained.

c. Thoroughly disinfect pipe, valves, cocks, fittings hoses, containers and miscellaneous items used for connection of new piping to an existing facility, immediately prior to installation. Clean and disinfect materials involved with a solution containing not less than 2000 PPM available chlorine and flushed with potable, i.e., disinfected water. A 2000 PPM chlorine solution may be obtained by mixing 1 gallon of commercial laundry bleach per 25 gallons of water. Preclude contamination of disinfected materials prior to installation.

D. Cleaning Of Steam And Condensate Systems

1. Provide temporary vent piping to atmosphere, and protect architectural surfaces.
2. Support and bracing to restrain reactive forces.
3. Protect or disconnect system components which may sustain damage as a result of purging.
4. Close isolating valves.
5. Safety precautions and procedures shall be followed. Evacuate personnel not directly involved in purging.
6. Slowly open steam supply valve to purge steam lines using live steam.
7. After purging steam lines, open steam trap bypass valves to purge condensate lines to waste. Provide sufficient cooling water at drains to prevent discharge exceeding 135 degF into drainage system.
8. After completion of purging, replace removed components, disassemble and clean strainers and place system in normal service.

E. Steam Blow

1. DRAWINGS indicate temporary and permanent provisions for steam blow piping cleaning which shall be supplemented by the CONTRACTOR as required to accomplish the WORK.

F. Steam And Condensate Line Purging

1. Preliminary purging/lancing shall be done with high velocity/high pressure dry compressed air.
2. High pressure (to 30,000 psi), low volume, high velocity water may be used for purging.
3. Final purging shall be done with facility steam when it becomes available, or at the CONTRACTOR’S option, by use of rental, semi-trailer mounted, self-contained, high pressure boiler with capacity to generate velocities in excess of (6,000) feet per minute.
4. Flash rust and idle-time corrosion shall be prevented/controlled in acceptable manner.
5. Cleanliness shall be indicated by condition of blow-off dirt indicating target/catch surface. Submit proposed target construction details.
6. Provide temporary and permanent vent/blow-off piping to atmosphere, including, anchor/support and bracing to restrain reactive forces and protect or disconnect systems components which may sustain damage during or as a result of purging/blow-off. CONTRACTOR shall include the cost of removing and replacing architectural finishes/siding, and protecting and washing building surfaces to eliminate iron oxide dirt/stain. Use large polyethylene sheets where necessary.

7. Safety precautions shall be operational. Evacuate personnel not directly involved in purging from area of the WORK.
8. Open steam trap bypass valves, to purge “condensate” lines to waste. Provide sufficient cooling water at drain to prevent temperature exceeding 135 degF at drainage system. Run condensate to waste until approved by the water treatment laboratory as free of oil, iron oxide and deleterious substances and suitable for return to boiler.
9. After completion of purging, replace removed components, disassemble and clean strainers and any debris exposed valves and place system in safe mode, ready for next phase of WORK.
10. When steam system is operational, flush all condensate returns to waste with cooling to limit temperature in sewer as indicated on the DRAWINGS. Continue to purge as condensate is received from new piping in distribution system coming on line for first time, until condensate is deemed by the water treatment laboratory as fit quality for entry into boiler.

G. Piping Systems Testing
1. GENERAL
   a. Tests shall be witnessed by OWNER’S REPRESENTATIVE, BNL Pressure Safety Representative, and authorized inspectors (or representatives) having jurisdiction, which shall be timely notified by the CONTRACTOR to insure their being present during the testing.
   b. Perform initial service leak test per applicable requirements of ANSI/ASME B 31.1 Code for Power Piping on all piping systems.
   c. Prior to acceptance of the WORK, pressure test from the existing systems connections through completed systems in the presence of the ARCHITECT-ENGINEER and authorities having jurisdiction.
   d. Test piping systems per their respective and applicable governing codes and the requirements specified. Pressure test the pressure piping systems at 1-1/2 times maximum operating pressure, except as otherwise specified. Do not test plastic piping systems pneumatically.
   e. Provide necessary equipment and materials and make necessary test connections required to properly execute tests. Make tests before piping surfaces are concealed.
   f. Water for test purposes will be furnished by the OWNER. Obtain water from point(s) designated by the ARCHITECT-ENGINEER. Remove promptly temporary connections upon completion of testing or when directed by the ARCHITECT-ENGINEER.
   g. Tests shall be pneumatic for compressed air, utilizing dry, oil-free compressed air, carbon dioxide or nitrogen unless otherwise specified or approved. Use nitrogen for final test/purge where flammables/combustibles occur and where specified. Perform testing in two stages, i.e., preliminary and acceptance. Do not perform pneumatic testing until personnel not directly involved in performing the testing have been evacuated from the area. Pneumatic testing shall require preliminary testing at pressure not exceeding 5 PSI.
   h. Preliminary testing at 5 PSI requires swabbing joints with a commercial leak detector solution and subsequent observation for bubbles. In the event that testing demonstrates that leakage rate exceeds specified limits, determine the source(s) of

leakage, repair or replace defective materials and workmanship, and retest the installation to specified requirements. Test during steady state ambient temperature conditions. Non-metallic systems testing shall be per manufacturer's recommendations and requirements specified. Immediately repair detected leaks or defects in the system.

i. Other than standard piping flanges, plugs, caps and valves, use only commercially manufactured expandable elastomer plugs for sealing off piping for test purposes. The safe test pressure rating of plug used shall be not less than two times the actual test pressure being applied. Expandable elastomer plugs shall not be used for piping which could develop sufficient reactive force to cause damage to a structure, other piping or cause moving of thrust or anchor provisions in case of blow-out.

j. Take precautions to vent the expansive force of compressed air trapped during high pressure hydrostatic testing to preclude injury and damage.

k. Components shall be removed from piping systems during testing whenever the component may sustain damage due to test pressure or test media. After completion of the test, the component shall be reinstalled and a test shall be reapplied at the component pressure rating.

l. System components such as valves shall be checked for functional operation under system test pressure. If the hydrostatic test pressure exceeds the valve manufacturers rating for hydrostatic seat test, the termination block valves shall remain open during the test and the system shall be blocked by other means. Existing steam and hot water piping connected to piping to be tested shall be shut off, drained and cooled before testing.

m. Prepare and maintain test records of piping systems tests. Records shall show ARCHITECT-ENGINEER and CONTRACTOR personnel responsibilities, dates, test gage identification numbers, ambient temperature, pressure ranges, rates of pressure drop and leakage rates. Two record copies of acceptance tests shall be delivered to the ARCHITECT-ENGINEER after acceptance.

2. POTABLE WATER SUPPLY MAINS

a. Test backflow prevention at connections between potable water and nonpotable water for proper functioning under conditions normal to application. Test shall be by Certified Tester.

3. GRAVITY DRAINAGE PIPING SYSTEMS TESTING

a. Prior to acceptance of the work, test completed systems in the presence of the ARCHITECT-ENGINEER and authorities having jurisdiction.

b. Test drainage piping systems per their respective and applicable governing codes and the requirements specified in this SECTION. Provide necessary equipment and materials and make necessary test connections required to properly execute tests.

c. Irrespective of any regulation to the contrary, test drainage and waste piping hydraulically by filling system to its highest point or, whichever is greater, at a static head of 10 feet. Leakage at any joint shall be sufficient cause for rejection and renewal of joint unless joint can be calked as specified or taken up sufficiently to stop leakage.

d. Air tests may be substituted in lieu of hydraulic tests by forcing air into the closed system at a uniform pressure sufficient to balance a column of 10" HG in height or a pressure of 5 PSI.

e. Under any of the previously described tests, the water pressure shall remain constant, after stabilization, for not less than fifteen minutes without any further addition of water.

4. ACCEPTANCE PRESSURE TESTING

a. Perform acceptance pressure testing as follows:

Service	Nominal Oper. Press. (PSI)	Test Type	Test Press (PSI)	Permissible Press. Drop & Hold Period (PSI/Hours)
Chilled Water	110	Hydro	165	2/2
City Water	110	Hydro	165	2/2
Condensate, Gravity		Hydro	150	2/2
Cooling Tower Water	35	Hydro	150	2/2
Instrument Air	115	Pneu	175	2/2
Potable Water	60	Hydro	150	2/2
Steam/Condensate	125	Hydro	180	2/2

b. Test unlisted systems in accordance with applicable code.

c. If testing demonstrates leakage, determine the source(s) of leakage, repair or replace defective materials and workmanship, and retest the installation to specified requirements.

d. Remake leaking gasket joints with new gaskets and new flange bolting, destroy old bolting. Where welded joints fail, submit proposed method of repair for approval by the ARCHITECT-ENGINEER and authorities having jurisdiction.

END OF SECTION

Revision History	
Date	**Rev. No.**
A	0
B	0
C	0
D	0
E	0
F	0
02-19-09	0

LMS/djo
Y:\d\timsdatasf\BROOKHAVEN_NATIONAL_LABORATORY\SF070003\200-PROJEXEC\280-SPEC\15105.doc

SECTION 15110

VALVES

PART 1 GENERAL

1.1 SUMMARY

A. Scope
1. Provide valves with materials of construction and methods of fabrication, assembly, erection, testing and interim operation in compliance with the requirements specified herein and requirements of applicable codes and authorities having jurisdiction.

B. Description Of Systems
1. Refer to Division 15 Section “Aboveground Piping Systems” for description of systems and associated valves.

C. Related Work Specified Under Other Sections
1. Division 15 Section “General Mechanical Requirements.”
2. Division 15 Section “Aboveground Piping Systems.”
3. Division 13 Sections for Instrumentation and Control Work.
4. Division 16 Sections for Electrical Work.

1.2 QUALITY ASSURANCE

A. Refer to Division 15 Section “General Mechanical Requirements.” for applicable requirements.

1.3 SUBMITTALS

A. Refer to Division 15 Section “General Mechanical Requirements.” for applicable requirements.

1.4 OPERATING AND MAINTENANCE PERSONNEL TRAINING

A. Refer to Division 15 Section “General Mechanical Requirements.” for applicable requirements.

1.5 PROJECT CONDITIONS

A. Refer to Division 15 Section “General Mechanical Requirements.” for applicable requirements.

1.6 GUARANTEE/WARRANTY

A. Refer to Division 15 Section “General Mechanical Requirements.” for applicable requirements.

PART 2 PRODUCTS

2.1 VALVES: GENERAL REQUIREMENTS

A. Provide valves conforming to ASME/ANSI, API, CGA, NFPA, UL, Owner's Underwriter's, and MSS Standards, Class as applicable, to suit specified and indicated requirements, including applicable codes/standards, function, fluid materials compatibility and maximum pressure/temperature conditions to be potentially encountered.

B. Integral Bypass Valves: Where specified or indicated and for 4" and larger, cast steel and forged steel body gate valves, in steam line (heating hot water line) service, fit with factory full-port sized and installed, forged steel, weld-end, globe bypass valves with minimum 500 Brinell stainless steel seat/plug and Schedule 80 hydraulically bent piping. Bypass valve sizes, respectively, shall be: 1/2, 3/4 and 1-inch for valves sized 4, 6 and 8, and 10-inch and larger.

C. Valved Drains: Line valves, in all fluids risers, shall have integral to body or line fitted, 1/2 inch ball valved drain on upper side of valve for valves 6 inch and larger and 1/2 inch ball drain for valves smaller than 6 inches. Where necessary to indicated function or to match line materials, provide cast steel or forged steel valves with integral tapped boss valved drains using Schedule 80 nipple. Ball valves shall be full port, system pressure/temperature and material rated.

D. Fit with chain operator (COP), manual valves sized 4 inch and larger, except dead-end location valves, in utility/equipment spaces and where indicated, which cannot be reached from operating level or position. Provide chain to within 4'-0" above operating level. Offset chains that fall in aisle-ways or over equipment to hang on hooks on nearest column or wall or otherwise secure for personnel safety.

E. Extension Shafts: Provide, where indicated, extension shaft guided in not less than 2 places, to prevent damage to valve stem and leakage.

F. Asbestos packing and gasket material is NOT ALLOWED.

G. Fit system valves with lock-shields in compliance with OSHA, Owner Lock-Out Standards and additionally where specified or indicated.

H. Where a valve is used for balancing, fit valve operator with adjustable memory stop.

2.2 GENERAL SERVICE VALVES

A. General Requirements
   1. See Article VALVES: GENERAL REQUIREMENTS.

B. Class 125, Threaded, Bronze Gate (GA-1), Globe (GL-1), Angle (AN-1) And Check (CK-1) Thru 2 Inches

1. Type 1 Series: Bronze body and trim, rising stem, union bonnet; minimum rating 125 PSI at 353 degF WSP, 200 PSI at 100 degF CWP.

	GA-1	GL-1	AN-1	CK-1
Crane		1	----	1707
Hammond	IB 617	IB 440	IB 463	IB 904
Milwaukee	1152	502	504	509
Powell	2700	650		578
Stockham	B-105	B-16	B-216	B-319

* Composition disc seat.
** Teflon disc seat.

C. Class 125, Flanged, Iron Gate (GA-2), Globe (GL-2), Angle (AN-2), And Check (CK-2) 2-1/2 Inches And Larger

1. Type 2 Series: Cast iron body, bronze trim, rising stem, outside stem and yoke; minimum rating 125 PSI at 353 degF WSP, 200 PSI at 100 degF CWP.

	GA-2	GL-2	AN-2	CK-2
Crane	465-1/2	351	353	373
Hammond	IR 1140	IR 116		IR 1124
Milwaukee	F2885	F 2981		F 2974
Powell	1793	241		559
Stockham	G-623	G-512		G-931

D. Class 150, Threaded And Flanged, Bronze Gate (GA-3, 3A), Globe (GL-3,3A), Angle (AN-3,3A), And Check (CK-3,3A) Thru 3 Inches

1. Type 3, 3A Series: Bronze body and trim, rising stem, outside stem and yoke; horizontal swing; minimum rating 150 PSI at 366 degF WSP, 200 PSI at 100 degF CWP.

Threaded	GA-3	GL-3	AN-3	CK-3
Crane	431-UB	7TF***	17TF***	137**
Hammond	IB 629	IB 413T***	IB 454T***	IB 944
Milwaukee	1151	590**	595**	508
Powell	2714	150***	151***	560
Stockham	B-120	B-22T***	B-222T***	B-321
Flanged	GA-3A	GL-3A	AN-3A	CK-3A
Crane	429	----	----	----
Powell	1414G		----	
Stockham	----	B-40/49	----	B-342

* Stainless steel disc and seat.
** Composition disc seat.
*** Teflon disc

E. Class 300, Flanged, Steel Gate (GA-7), Globe (GL-7) Angle (AN-7), And Check (CK-7), 2-1/2 Inches And Larger

1. Type 7 Series: Cast steel body and hard alloy seat trim; minimum rating 300 PSI at 800 degF WSP, 740 PSI at 100 degF CWP. Outside stem and yoke; flexible wedge for gate valves.

	GA-7	GL-7	AN-7	CK-7
Crane	33-XU	151-XU		159-XU
Powell	3003N	3031	3033	3061
Stockham	30-OF-U	30-GPF-U	----	30-SF-U
Velan	F1064C-02TY	F1074C-02TY		F1114C-02TY

F. Class 800, Threaded And Socket Weld, Forged Steel Gate (GA-8, 8A), Globe (GL-8, 8A), Angle (AN-8, 8A), And Check (CK-8, 8A) Thru 2 Inches

1. Type 8, 8A Series: Minimum rating 800 PSI at 850 degF WSP, 2000 PSI, at 100 degF CWP; forged steel body and hard alloy seat trim; stainless steel stem; outside stem and yoke.

Threaded	GA-8	GL-8	AN-8	CK-8
Bonney-Forge	HL-14	HL-31	----	HL-41
Velan	S2054B-02TY	S2074B-02TY		S2034B-02TY
Vogt	12111	12141	1971	701 (Ball Horz) 54853 (Ball H or V)
(RP&C	F-56	F-80	----	----)
(Hancock-Dresser	950 thru 3”	5505	5510S	55805)
Socket Weld	GA-8A	GL-8A	AN-8A	CK-8A
Vogt	SW12111	12141	SW-1971	SW-701 (Ball H) SW-54853 (Ball H or V)
(RP&C	F-57	F-81	----	----)
(Hancock-Dresser	950W	5500W	5510W)	

G. Type GL-11: Needle, Threaded

1. Bar stock carbon steel body, threaded end with Type 303 or 416 stainless steel valve stem, fine thread stem, Teflon packed; minimum rating 4000 PSI at 100 degF WOG.
2. EEP/Fig 1900 (1/4 thru 1 inch)
3. RP&C Fig 1040/Tee Handle (1/8 thru 1 inch)
4. Trerice Fig 740-5

2.3 BALL VALVES

A. General Requirements

1. See Article VALVES: GENERAL REQUIREMENTS.
2. Valves shall be suitable for bi-directional service.
3. Where specified and where required by applicable codes or authorities having jurisdiction, provide valves with: special cleaning; Firesafe construction per API 607; integral anti-static grounding per NFPA.
4. Provide valve stem extension for valves which are insulated in Chilled Water Systems and where handle temperature could exceed OSHA 150 degF limits.

5. Manual operators shall be safety oval type for valves thru 3 inches and enclosed gear handwheel type for valves 4 inches and larger, except where chain operators are additionally required. Submit samples of proposed safety oval handles and insulation stand-off handles.
6. Provide ball valves with “dead-man” spring return handles, dust cover with chain, center tap drain, OSHA automatic pressure drain and “pad-lock” features where indicated.

B. Type BA-1: Class 150, Threaded, 2-Piece All Bronze
1. Minimum rating 150 PSI at 366 degF WSP, 400 PSI at 100 degF CWP; brass or bronze 2-piece body and ball; reduced port; TFE seats and seals; brass or bronze trim; threaded end connections.
   a. Neles/Jamesbury “Clincher Type 2000” (1/4 thru 2 inches). Size 21-1100TT-0.
   b. Smith (1/4 thru 2 inches) 0125-size.
   c. PBV, Series 5324.

C. Type BA-2: Class 150, Threaded And Socket Joint, 3-Piece Bronze
1. Minimum rating 150 PSI at 366 degF WSP, 300 PSI at 100 degF CWP; bronze 3-piece body and ball; full or reduced port as specified; 30 or 60 degree V-port where indicated; 3-way ported where indicated; TFE glass or Type 316 stainless reinforced seats, and TFE seals; bronze or Type 304 or 316 stainless trim; threaded and socket joint end connections, anti-static grounded for hydrocarbon systems and where specified.
   a. PBM “SP Series” (3/4 thru 4 inches):
   b. Worcester “Miser”* (1/4 thru 2 inches):
      1) Threaded. size-4-1-6-RT-SE (2-way) size-T-4-1-6-T-SE (3-way)
      2) Socket Joint. size 4-1-6-RT-TE.

   *316 Type stainless ball; V-port source .

   c. Conbraco/Apollo. (3/8” thru 2”)
      1) Threaded: 82-140 Series.
      2) Socket Joint: 82-240 Series.

D. Type BA-2A: Class 150, Flanged, 3-Piece Bronze
1. Same as Type BA-2, except flanged ends and full port.
   a. PBM “SP Series,” Full Port, (1 thru 4 inches). SP-B-size code-F-15-2.

E. Type BA-2B: CWP 300 PSI, Threaded And Socket Joint, 3-Piece Bronze
1. Minimum rating 300 PSI at 100 degF CWP; bronze 3-piece body and ball; reduced port; virgin TFE seats and seals; bronze trim; threaded and socket joint end connections.
   a. PBM “SS Series” (3/4 thru 4 inches):
      1) Threaded. SS-B-size code-S-2.
      2) Socket Joint. SS-B-size code-SJ-2.
   b. Worcester “Miser” (1/4 thru 2 inches):
      1) Threaded. size-4-1-1-T-SE.
      2) Socket Joint. size-4-1-1-T-TE.
   c. Apollo:
      1) Threaded. 82-100 Series
      2) Solder Joint. 82-200 Series

F. Type BA-4C: Class 150, Flanged, Ferrous
   1. Minimum rating 150 PSI at 366 degF WSP, 275 PSI at 100 degF CWP; ferrous 1 or 3-piece body; full or reduced port; TFE glass or Type 316 stainless filled seats and TFE seals; Type 316 stainless ball and trim; flanged end connections.
      a. Neles/Jamesbury "Type 5150" (1/2 thru 4 inches). size-5150-31-22-36-MT; "Type 7150" (3 inch and larger) size-7150-31-2200 TT.
      b. PBM "AN Series", Full Port (1thru 6 inches). AN-E-size code-F-15-2.
      c. Worcester (1/2 thru 10 inches). size-51-4-6-R-T-150.
      d. Apollo (1/2 thru 10 inches). 88A-140 Series.

G. Type BA-9: CWP 150 PSI, Threaded, Socket Weld And Flanged, PVC Or CPVC
   1. Minimum rating 150 PSI at 73 degF CWP; TYPE 1, GRADE 1 PVC or TYPE 4, GRADE 1 CPVC; true union body; TFE seats and Viton seals.
      a. Asahi/American True Union. Threaded, Socket or Flanged (1/2 thru 6 inches).
      b. Chemtrol-Nibco True Union. Threaded, Socket or Flanged (1/2 thru 3 inches).
      c. Colonial, "Full Block True Union" Threaded, Socket or Flanged (1/2 thru 6 inches).
      d. Hayward True Union. Threaded, Socket or Flanged (1/2 thru 4 inches).
      e. Spears.

2.4 BUTTERFLY VALVES

A. General Requirements
   1. See Article VALVES: GENERAL REQUIREMENTS.
   2. Lever operator, minimum nine position for valves thru 3 inches; lubricated enclosed screw or gear handwheel/chainwheel operator for valves 4 inches and larger. Chainwheel operator shaft shall be sized to preclude bending. Chains shall be galvanized. Tapped lug and flanged valves shall be guaranteed for bubble-tight closure at rated pressure and temperature with one pipe flange removed. For valves requiring insulation provide extended neck suitable for insulated service. Provide linkage with clevis-ends, screw/locknut position adjustment capability where 3-way valves are indicated. Where operator shaft is parallel to valve stem, provide 1:1 miter gear box integral to worm gear operator.
   3. Gear Actuators: Provide for all valves sized 4 inches and larger. For valves sized 30 inches and larger, provide gear ratio requiring less than 90 ft. lb. torque input and not more then 6-1/2 turns to open to produce tight closure output torque under design operating conditions.

B. Type BF-1: CWP 150 PSI, Cast Iron Lug Body, Buna-N Lined, Bronze Disc, Heavy Duty Thru 36 Inches
   1. Heavy industrial duty cast iron lug body; EPDM or Buna-N removable liner; Type 316 solid one-piece stem; reinforced TFE bushings sealed from service media; bronze or aluminum-bronze disc; minimum bubble-tight rating 150 PSI at 180 degF. Provide specified tapped/MSSSP-44 flanged valves in sizes 30 inches and larger or at CONTRACTOR'S option, flanged AWWA C-504 Class 150 equivalent.
      a. Bray Controls, Series 31 (2 thru 20 inches), Series 35/36 (24 thru 54 inches.)
      b. Center Line Series 200; aluminum-bronze disc,. (2 thru 30 inches).

c. DeZurik “BRS Series”; bronze disc, Teflon coated stainless steel or TFE filled bushings tap-flanged in sizes 30” and larger.

C. Type BF-2: AWWA Class 150B, Flanged, Elastomer Lined Thru 48 Inches
1. Drilled flange cast iron body valve shall be in conformance with AWWA C-504-80, CLASS 150B for Short Body Flanged Valves; EPDM or Buna-N seat and seals; Type 304 one-piece stainless steel stem; Nylon, glass filled TFE or Teflon coated steel bushings, bronze or ductile iron disc with stainless steel edge; Minimum bubble tight rating 150 PSI at 180 degF.
a. Crane “AWWA Series”; bronze disc, filled TFE bushings (3 thru 12 inches). Model 27F-BRB.
b. Pratt “AWWA Series”; bronze disc, Nylon bushings (3 thru 20 inches).
c. Pratt “Triton Series”; ductile iron with stainless steel edged disc, TFE filled bushings (24 to 48 inches).

D. Type BF-4: Class 150, High Performance Carbon Steel Lug, Type 316 Stainless Steel Disc, Teflon Seat Thru 36 Inches
1. Carbon steel lug or tapped flange body and retainer; Type 316 stainless steel disc, single-piece stem, top and bottom bushings, adjustable packing gland, fasteners, and miscellaneous trim; Teflon/stainless steel packing, seals. ANSI CLASS 150; minimum rating 150 PSI at 363 degF WSP, 285 PSI at 100 degF CWP; (ANSI/FCI 70.2 Class IV maximum leakage.)
a. Bray/McCannalok, Series 41
b. DeZurik (2 thru 36 inches). “BHP” - Series.
c. Durco “Big Max Series” (3 thru 30 inches). BX2L Series.
d. Grinnell “Hi-Seal” Series.(2 thru 48 inches) S15L-1132.(LMS 4-18-97)
e. Xomox “Pliaxseal Series” (3 thru 48 inches). 811-B-6-1.
f. Neles Jamesbury “Wafer-Sphere” 815L Series.
g. Milwaukee, HP Series.
h. ABZ, 400 Series.

2.5 CHECK VALVES

A. General Requirements
1. See Article VALVES: GENERAL REQUIREMENTS.

B. Type CK-15: Class 125, Threaded And Flanged, Cast Iron, Non-Slam, Silent, Thru 24 Inches
1. Minimum rating 150 PSI at 100 degF CWP; cast iron globe body and bronze and stainless steel trim, center-guided poppet-disc, plugged drain. FM approved where required.
a. Apco Valve and Primer Corp.
1) Flanged Fig 600 Series.
b. Combination Pump and Valve (CPV):
1) Threaded. No. 34 (1/2 thru 2 inches).
2) Flanged. No. 20D (6 thru 24 inches), 125 PSI at 100 degF CWP.
c. Mueller Steam Specialty:
1) Threaded. No. 203-BP (1/2 thru 2 inches).

2) Flanged. No. 105-AP (2 thru 24 inches).

d. Val-Matic Valve and Manufacturing:

1) Flanged. Fig. 1800 Series ANSI 125 (2-1/2 thru 42 inches).

e. Milliken

*All threaded end valves are 300 PSI CWP pressure rated only.

C. Type CK-15F, Foot Valve And Suction Strainer

1. Minimum rating 150 PSI at 70 degF, PVC true union body, PVC ball check and C.V. seat carrier, EPDM seats and seals, socket outlet connection. Fit with PVC foot valve screen housing assembly.

a. Chemtrol-Nibco, TUBC.

b. Asahi/American.

c. Colonial

d. Hayward.

e. Spears.

D. Type CK-18: CWP 150 PSI, Wafer, Non-Slam, Split Disc Thru 48 Inches

1. Minimum rating 150 PSI at 100 degF CWP; cast iron body, bronze or aluminum bronze discs, stainless steel trim, Buna-N seats and seals.

a. APCO “9000 Series” (2 thru 42 inches). 9-0-size-A-R-1-F.

b. TRW “Mission”:

1) (2 thru 5 inches). K-12-H-M-P.

2) (6 thru 48 inches). G-12-H-M-P.

E. Type CK-30: Class 150 Flanged Cast Steel 2 Thru 10 Inch

1. Minimum rating 285 PSI at 100 degF, Class 150 flanged cast steel body, TYPE 304 pulsation dampening, stable, center-guided, stainless steel disc/trim (with) (BUNA-N) (Teflon) (soft seat).

a. Durabla (215-363-8900) PDC Series.

F. Type CK-34: Flanged Body, Elastomer Sleeve, Pinch Check Assembly Thru 20 Inches

1. Minimum rating 50 PSI at 70 degF CWP, cast iron bodyBuna N elastomer normally closed sleeve, pinch check valve assembly designed for not less than 50 PSI back pressure.

a. Red Valve “Series 39”.

2.6 NEEDLE VALVES

A. Type ND-1: Needle, Threaded

1. Bar stock carbon steel body, threaded end with Type 303 or 416 stainless steel valve stem, fine thread stem, Teflon packed; minimum rating 4000 PSI at 100 degF WOG.

a. EEP/Fig 1900 (1/4 thru 1 inch)

b. RP&C Fig 1040/Tee Handle (1/8 thru 1 inch)

c. Trerice Fig 740-5

2.7 PLUG VALVES

A. General Requirements
   1. See Article VALVES: GENERAL REQUIREMENTS.
   2. Valves thru 3 inches shall have lever operator. For larger valves provide enclosed gear handwheel operators. Provide chainwheel fitted operators where required.
   3. Where specified and where required by authorities having jurisdiction, provide valves with. firesafe construction per API 607; integral anti-static grounding per NFPA.
   4. For TYPE PL-2 valves, deliver to OWNER, sealant injection tool and spare sealant.

B. Type PL-1: Eccentric Plug
   1. Ferrous or bronze bodies with screwed ends in sizes 2 inches and smaller; flanged ferrous bodies in sizes 2-1/2 inches and larger. Nonferrous plug with elastomer seals or elastomer coated plug. Full bore for sizes 6 inch and larger. Plug and seal elastomer, manufacturer's standard for fluid system media and temperature. Fit valves with "memory" device or mechanism to permit valve to fully close but limit opening to preset point. Rated not less than 175 PSI at 225 degF.
      a. DeZurik "Series 100". Fig. 118 to 121.
      b. Homestead "Ballcentric Series".

C. Type PL-3A: Non-Lube Ferrous With Type 316 Stainless Plug With Teflon Sleeve
   1. Minimum rating 250 PSI at 100 degF CWP; ferrous body; Type 316 stainless plug; PTFE sleeve; Type 302, 304 or 316 stainless trim. Provide API 607 firesafe seals (anti-static) construction where specified or required by code/authorities having jurisdiction.

a.	Screwed	1/2 thru 2 inches	SMG	Permaseal
b.	RF Flanged	1/2 thru 6 inches	SMG	Permaseal
c.	Screwed	1/4 thru 2 inches	Durco	G432
d.	RF Flanged	1/2 thru 14 inches	Durco	G411
e.	Screwed	1/2 thru 2 inches	Tufline	066
f.	RF Flanged	1/2 thru 12 inches	Tufline	067/EG
g.	Screwed	1/4 thru 2 inches	Grinnell	152
h.	RF Flanged	1/2 thru 12 inches	Grinnell	152 .

2.8 SPECIAL SERVICE VALVES

A. General Requirements
   1. See Article VALVES: GENERAL REQUIREMENTS.

B. CHW System Balancing And Measuring Valves
   1. *Balancing valves [D]:* Provide combined shut-off, balancing valve, and flow indicator.
      a. ITT Bell & Gossett “Circuit Setter”.
      b. Taco.
      c. Griswald.
      d. Preso Industries.
      e. Armstrong.
      f. Tour and Anderson.

C. Pressure Relief Safety Valve - Water (PRSV)
   1. *PRSV [D,P]:* Poppet style, self-contained pressure relief valve. Valve body shall be bronze, cast iron or forged steel to suit the service conditions.
   2. Rate ASME Listed pressure relief valves for the pressure of the high-pressure side, and size for the full installed capacity of the low pressure side of the regulating station. Factory set valve at not more than 20% above low side pressure. Furnish seat material suited for the service.
      a. Ashcroft.
      b. Consolidated.
      c. McDonnell and Miller.
   3. For potable water supply, set to operate at pressure as indicated.
      a. Contramatics-Watts “10XL8”.
      b. Cla-Val “No. 50 Series”.

D. Pump Control Valve (PCV)
   1. *PCV [D,P]:* Provide diaphragm actuated, single seated, hydraulically operated globe type valve. Valve shall have two operating chambers sealed from each other by a flexible, synthetic rubber, fully supported diaphragm. Valve disc shall be resilient, with a rectangular cross section, and shall be retained on three sides. Control of valve operation shall be by means of an externally mounted, four-way solenoid pilot valve. Self cleaning strainers shall be used to protect the control system. Valve shall utilize line valve to fully open from full closed position over two minute span. On de-energizing of solenoid, valve shall return to full closed position over two minute span. Valve shall be equipped with a built-in lift type check feature to prevent reverse flow. Valve shall operate independently of the solenoid control.
      a. Cla-Val, Model 60-11.

E. Safety Relief (SRV)
   1. *TYPE SRV-(1) [P]:* For compressed air service.
      a. Valves shall conform to ASME Unfired Pressure Vessel Code SECTION VIII and capacities shall be certified by NBBPVI stamp.
      b. Size for required capacity and pressure, set-point for each application 10% or 10 PSI greater than operating pressure, 10% pressure accumulation at maximum flow (90% of theoretical capacity).
      c. Valves in sizes 2 inches and under shall have threaded or flanged connections and valves 2-1/2 inches and larger shall have integral to body or fitted flanged inlet and outlet connections.
      d. Valve body and trim materials shall be bronze, cast iron, cast steel, wrought steel or stainless steel to match fluid piping system service corrosion conditions.
         1) Spence.
         2) Consolidated Div. of Dresser Industries.
         3) O.C. Keckley Co.
         4) Kunkle.
         5) Nicholson.

PART 3 EXECUTION

3.1 GENERAL

A. Execute the WORK in compliance with Division 15 Section “General Mechanical Requirements.”

B. Refer to Division 15 Section “Aboveground Piping Systems” for additional requirements.

C. General Service Valve Locations
   1. Locate shut-off valves to permit isolation of system mains, branches and risers, equipment and piping specialties, from the balance of each connected piping system, without loop or system shutdown. Locate system sectionalizing and equipment isolation valves to permit safe shutdown and convenient maintenance or drainage of equipment without moving equipment.

END OF SECTION

Revision History	
Date	**Rev. No.**
A	0
B	0
C	0
D	0
E	0
F	0
02-19-09	0

LMS/djo
Y:\d\timsdatasf\BROOKHAVEN_NATIONAL_LABORATORY\SF070003\200-PROJEXEC\280-SPEC\15110.doc

SECTION 15120

PIPING SPECIALTIES

PART 1 GENERAL

1.1 SUMMARY

A. Scope
   1. Provide specialties with materials of construction and methods of fabrication, assembly, erection, testing and interim operation in compliance with the requirements specified herein and requirements of applicable codes and authorities having jurisdiction.

B. Description Of Systems
   1. Refer to Division 15 Section “Aboveground Piping Systems” for description of systems and associated valves.

C. Related Work Specified Under Other Sections
   1. Division 15 Section “General Mechanical Requirements.”
   2. Division 15 Section “Aboveground Piping Systems.”
   3. Division 13 Sections for Instrumentation and Control Work.
   4. Division 16 Sections for Electrical Work.

1.2 QUALITY ASSURANCE

A. Refer to Division 15 Section “General Mechanical Requirements.” for applicable requirements.

1.3 SUBMITTALS

A. Refer to Division 15 Section “General Mechanical Requirements.” for applicable requirements.

B. Include piping system layout drawings, piping sizes, calculations and coefficients used, materials and equipment classification and identification, component pressure/temperature rating, piping and equipment supports and restraints, special installation requirements, catalogue data and other data necessary to verify compliance with CONTRACT DOCUMENTS.

1.4 OPERATING AND MAINTENANCE PERSONNEL TRAINING

A. Refer to Division 15 Section “General Mechanical Requirements.” for applicable requirements.

1.5 PROJECT CONDITIONS

A. Refer to Division 15 Section “General Mechanical Requirements.” for applicable requirements.

1.6 GUARANTEE/WARRANTY

A. Refer to Division 15 Section "General Mechanical Requirements." for applicable requirements.

PART 2 PRODUCTS

2.1 PIPING SPECIALTIES

A. 4-Way Valve / Automatic Tube Brushing System (Bid Alternate No. 2)
   1. *4-Way Valve / Automatic Tube Brushing System [D,P]:* Provide an automatic chiller condenser tube brushing system consisting of nylon brushes inserted in each tube with polypropylene catch baskets attached to the end of each tube, pneumatic actuated 4-way valve installed to permit reversing the direction of water flow, and control panel.
   2. Brushes shall have an interference fit not to exceed 0.025" and shall consist of nylon bristles, titanium wire, and polypropylene tips with vanes to cause a spiraling movement through the tube.
   3. 4-Way valve shall be ASTM A 36 carbon steel body, with grooved end connections on the top ports and flanged end connections on the bottom ports, ASME UPVC Section VIII rated for 125 psig with maximum system differential of 35 psig, positive sealing plug type with all internal sealing parts of hard rubber and AISI Type 304 Stainless Steel. Valve shall have parallel flow connections to minimize field installation piping and labor. Valve shall be field adjustable for plug to seat clearance to minimize bypass. Valve shall allow for manual fail safe turning, and have a mechanical position indicator.
   4. Control panel shall include:
      a. Cycle counter
      b. Timer initiated automatic on-load cleaning cycle
      c. Manual override
      d. Power On light
      e. Diverter Position Indicator lights:
         1) Normal Flow
         2) Reverse Flow
      f. Malfunction light
      g. 4-way solenoid valve
      h. Electric Unloading Feature
      i. Flow Switch Bypass
   5. Manufacture
      a. Water Technology Of Pensacola, Inc., ATB System.
   6. Air Hose: Multiple ply nitrile rubber hose with spiral synthetic yarn reinforcement, rated to 250 psi.
      a. Hosecraft USA, Model RM1.
      b. Goodyear.
      c. B. F. Goodrich.
   7. Filter-Regulator-Lubricator Set: Manufacturer's standard with metallic construction and polycarbonate bowls, quick bowl disconnects, manual drain cock, bronze or stainless steel

filter element to remove 15 micron and larger particles, standard relieving type regulator rated for 150 psi, pressure indicating gauge, and adjustable lubricator.

a. Norgren.
b. Numatics
c. Parker.
d. Deltech.

B. Air Vents (MAV) (AAV) (HCAAV)(AVS)

1. *Manual air vents [D,P]:* See System Description and DRAWINGS.
2. *TYPE AAV Automatic Air Vent [D,P]:* For nonpotable water service: Capacity shall be (1) SCFM at 16 PSID with, vent inlet not less than 3/4 inch IPS and outlet not less than 1/8 inch IPS. AISI 300 Series stainless steel trim. Fit with soldered hard copper discharge to point of approved disposal. Contractor shall provide shut-off valve. See detail on Drawings.
   a. Bell & Gossett, No. 87.
3. *TYPE HCAAV High Capacity Automatic Air Vent [D,P]:* For nonpotable water service: Capacity shall be (1) SCFM at 16 PSID with, vent inlet not less than 3/4 inch IPS and outlet not less than 1/8 inch IPS. Cast iron body and bonnet, AISI 300 Series stainless steel trim. Fit with soldered hard copper discharge to point of approved disposal. Contractor shall provide shut-off valve. See detail on Drawings.
   a. Bell & Gossett, No. 107A.
4. *TYPE AVS Automatic Air Vent [D,P]:* For steam service, balanced pressure thermostatic type rated for service temperature and pressure. Bellows shall be non-ferrous. Heads and seats shall be stainless steel.
   a. Armstrong “TTF”.
   b. Sarco.

C. Backflow Preventer (BFP)

1. *Backflow Preventer [D]:* Reduced-pressure backflow prevention device per AWWA C-506 or ASSE requirements, consisting of two tight-closing check valves, two shut-off valves, anti-syphon mechanism, and test ports. Wetted components; bronze or stainless steel selected for service.
   a. Cla-Val “R.P. Series”.
   b. Watts Regulator.
   c. Hersey-Sparling.
   d. Conbraco.
   e. Febco.

D. Dielectric Isolators, Type (DEI)

1. *Dielectric Isolators [P]:* Unions and/or flanges flange kits rated for service fluid exposure, pressure, and temperature conditions, with metal connections on ends to match joints and metallurgy of connecting piping.
   a. Capital Manufacturing & Supply, Columbus, Ohio.
   b. Central Plastics Co., 405-275-6302.
   c. Epco Sales Inc., Cleveland, Ohio.
   d. Maloney.

e. Pipeline Development Co., Cleveland, Ohio.

E. Escutcheons
1. Escutcheons: Nonferrous one-piece or split pattern type shall maintain a fixed position against a surface by internal spring tension or set screws.

F. Flanges, Spectacle
1. (Carbon) (Stainless) Steel for ANSI Class (150) (300) flanges, 1/4 inch thick for sizes thru 4 inch, 3/8 inch thick for sizes 5 thru 6 inch, 1/2 inch thick for 8 inch, 5/8 inch thick for 10 inch, 7/8 inch thick for 12 inch, 1 inch thick for 14 thru 18 inch and 1-1/8 inch thick for 20 inch with ANSI B16.5 standard micro-inch joint surface finish.
   a. RP&C Valve (814-479-1551)
   b. Secondaries Inc. (800-243-2678)
   c. Winston Manufacturing Corp. (214-757-7341)
   d. CONTRACTOR

G. Flexible Connectors (Type FC Series)
1. *TYPE FC-1 Spherical Elastomer Connector [D,P]:* Steel van-stone flanged expansion-vibration joints to absorb movement of the pipe sections with no detrimental effect on joint. Provide control rod or cable assemblies to restrict joint movement under service pressure (positive or negative) application. Provide spherical steel washers at control rods. rubber washers are not acceptable. Provide joints for continuous duty working temperature of not less than 240 degF and pressures to 225 PSI. Factory tag joints with manufacturer's maximum recommended limits for elongation or compression or lateral displacement and do not remove prior to acceptance inspection.
   a. Metraflex Co. "Metra-Sphere/Cablesphere".
   b. Garlock EZF-200.
   c. General Rubber Corp. "Maxi-Sphere" Style 1010.
2. *TYPE FC-2 Braided/Convoluted Metal Hose [P]:* AISI 304 or 316 Series stainless steel externally shielded with wire braid of same or similar alloy, with ANSI Class 150 flat faced flanges, rated for not less than 150 PSI at operating temperature with safety factor of 4 for all sizes.
   a. Minimum live length shall be (per manufacturer's calculations) (as indicated) (for indicated applications).
   b. Maximum permanent offset shall be 1inch or as scheduled.
   c. Maximum offset shall be 1 inch ± greater than maximum permanent offset with zero allowance for misalignment.
   d. (For Gasoline Service, hose shall be UL Listed.)
   e. Manufacturers:
      1) Anaconda.
      2) Boa.
      3) Metraflex Hose and Braid.

H. Gauge Piping
1. Gauge Piping: Annealed, pressure-rated copper tubing or stainless steel to suit media and nonferrous fittings to suit media on remote pressure gauge connections. Provide shut-off

valves, pulsation dampeners and Schedule 40 syphon connections as required by the service.

I. Unions Orifice
   1. *Orifice Unions [D]:* Threaded or socket weld female ends, forged steel rated 3000 PSI WOG minimum, fitted for but furnished without orifices for field drilling.
      a. Clayton-Mark.
      b. Other approved.

J. Pressure/Temperature Test Plug
   1. Brass body, ¼" NPTM, with Neoprene or Nordel probe insertion valve core, brass cap and cap retaining strap. Maximum operating pressure 400 PSIG, operating temperature range 45 – 200 degrees F.
      a. Peterson Equipment Company, Pete's Plug Model 100.
      b. Other Approved.

K. Pressure Indicating (PI) Gauges
   1. Bourdon tube type: With minimum 4-1/2-inch dial. Case shall be of drawn steel with friction fit stainless steel ring. Bourdon tube and socket material shall be as required for the service media. Pointer shall be precision needle type. Range shall be twice design pressure, except where otherwise indicated, and normal operation and accuracy shall be within 1 percent over the middle third of the range. Where not indicated otherwise, provide range such that process readout is nominally at mid-point of middle-third of range. Dial shall indicate in Kg/Cm^2 and PSI.
   2. Furnish gauge complete with manufacturers standard needle type isolation valve and integral-to-stem snubber screw.
   3. Provide compound gauges at pump suction and at vertical locations where pressure/vacuum occurs. Provide/retrofit glycerine filled type gauges at interior to building pumps, air compressors, and wherever pulsation occurs.
   4. Where indicated, furnish gauges complete with 60 inch stem.
   5. Manufacturers:
      a. Trerice.
      b. Marsh Instruments.
      c. U.S. Gauge.
      d. Ashcroft.
      e. Weksler.
      f. Palmer.

L. Differential Pressure Gauges
   1. Rolling diaphragm type: With 6 inch dial, case shall be of drawn stainless steel with friction fit stainless steel ring. Diaphragm shall be Buna. Pointer shall be precision needle type. Range shall be 0-50 psid and accuracy shall be within ±2% ascending.
   2. Furnish gauge complete with manufacturers standard needle type isolation valves and integral-to-stem snubber screws.
   3. Manufacturers:
      a. Ashcroft, Model 1131.

b. Trerice.
c. Marsh Instruments.
d. U.S. Gauge.
e. Weksler.
f. Palmer.

M. Sight Flow Devices
1. Sight flow devices: Cast iron or bronze body, screwed ends in sizes 2 inches and smaller and ANSI B16.1 flanged for 2-1/2 inches and larger. Moving Teflon wheel or moving stainless steel pinned flapper, borosilicate glass, assembly rated at not less than 100 PSI at 240 degF with 1.5 PSI max. pressure drop.
   a. Eugene Ernst Co. — EEP 300-S. through 2 inch, wheel
EEP 960f. through 4 inch, wheel.
   b. Dover Corp./OPW Div. — Vis-Flo. through 4 inch, wheel

N. Strainers
1. *TYPE STR-Y, LINE Y-BODY [D,P]*:
   a. ANSI Class 125 pressure/temperature rating and body materials shall match fluid system in which installed, unless otherwise specified. Strainer screen/back-up to pipe area ratio shall be not less than 3:1 and pressure drop, 25% dirty, shall not exceed 2 PSI at fluid rated flow.
   b. Strainer screen perforated sheet back-up shall be AISI TYPE 304/316 stainless steel or Monel. Start-up screens. Liquids No. 20 mesh; gases/vapors No. 100 mesh. Revise to approved particle separation where mandated by fluid characteristics/ pressure drop.
   c. Cast iron body, screwed ends thru 2 inch, unless otherwise specified; flanged ends in sizes 2-1/2 inches and larger with off-set blow-off connection. Fit with system rated ball blow-down valve with capped outlet, unless otherwise indicated, differential pressure gauge tapped connection parts.
      1) Armstrong
      2) Keckley
      3) Leslie
      4) Mueller Steam Specialty
      5) Metroflex.
2. *TYPE STR-ST SIMPLEX, BASKET [D,P]*:
   a. ANSI Class 125, pressure/temperature rating: wetted metallic and non-metallic materials shall be suitable for fluid contained in system in which installed. Strainer screen/back-up to pipe area ratio shall be not less than 3:1 and pressure drop, 25% dirty, shall not exceed 2 PSI at fluid rated flow.
   b. Strainer screen back-up shall be AISI TYPE 304/316 stainless steel. Start-up screens No. 20 mesh. Revise to approved particle separation where mandated by fluid characteristics pressure drop.
   c. Cast carbon steel body, flanged ends. Body drain in bottom, fitted with ball blowdown valve with capped outlet, unless otherwise indicated. Bolted cover suitable for pressure temperature rating, fitted with two eye bolts suitable for lifting, fitted

with rated pressure vent valve. Provide differential pressure gauge tapped connection ports.

d. Manufacture:
   1) Andale
   2) Elliot
   3) Keckley
   4) Mueller Steam Specialty
   5) S.P. Kinney
   6) Kraissl Co.
   7) Leslie
   8) Metroflex

O. Temperature Indicators And Thermowells
1. GENERAL SERVICE DIAL TYPE (TI):
   a. Bi-metallic or vapor actuated, hermetically sealed, AISI 18-8 cased, 5 inch minimum dial. Fixed stem when located within 6 feet of reading level. Otherwise. Remote Service Type. Furnish with Thermowells. Range as required by service conditions to read at mid-point. Dual scale readout, degC/degF.
      1) Ashcroft.
      2) Marsh Instruments.
      3) Rochester.
      4) Trerice.
      5) Weksler.
      6) Palmer.
2. REMOTE SERVICE DIAL TYPE (TI-RS):
   a. Liquid or vapor actuated, remote element type with armored capillary, hermetically sealed AISI 18-8 cased, 3-1/2 inch minimum dial. Furnish with Thermowells. Range as required by service conditions to read at mid-point. Dual scale readout, degC/degF.
      1) Ashcroft.
      2) Marsh Instruments.
      3) Rochester.
      4) Trerice No. 8000 Series.
      5) Weksler.
      6) Palmer.
3. INDUSTRIAL PATTERN (TI-S):
   a. Non-mercury filled, liquid-in-glass, 9 inch dual scale degC/degF readout, aluminum cased, adjustable stem. Range as required by service conditions to read at midpoint. Furnish with separable thermowells.
      1) Ashcroft.
      2) Marsh Instruments.
      3) Trerice.
      4) Weksler.
      5) Palmer.
4. THERMOWELLS (TW):
   a. Metallurgy to match system wetted valve trim.

b. Brass where suited for neutral pH service media and at less than 200 degF. Otherwise, AISI Type 304 or 316 stainless steel to suit service conditions. Provide extension neck type to accommodate insulated surfaces installations.

P. Vacuum Breakers
1. Rate for the temperatures, pressures and service to be encountered. Provide with isolating valve on inlet side.
a. Crane.
b. Johnson.
c. Hoffman.

Q. Water Hammer Arrestors
1. *Water Hammer Arrestors [D]:* Commercially manufactured with AISI TYPE 18-8 stainless steel bellows arranged to absorb the energy of pressure waves generated by valve closure in a line in which liquid is flowing. Arrestors with inlets sized 1 inch and smaller, per Plumbing and Drainage Institute Standard PDI-WH201. Arrestors for larger system requirements, engineered for the service by the manufacturer.
a. Metraflex "Surge Master".
b. J. R. Smith.
c. Josam.
d. Souix Chief.

2.2 ELECTRIC HEAT TRACING

A. General
1. Provide electric heat tracing system as a CONTRACTOR/manufacturer turnkey design, engineering, manufacturing, installation, start-up, testing responsibility to automatically protect specified/indicated systems from freezing. Provide system in accordance with IEEE Heat Tracing Design Recommended Practice, NFPA-70, UL, and the DRAWINGS.
2. Only one 30 amp, 480 Volt, 3-phase 60 Hertz power supply will be provided to Heat Trace System Control Panel HTCP-2 as part of WORK under Division 16 Series SECTIONS. All other electrical work shall be provided as part of electric heat tracing work, in accordance with specified standards/codes and Division 16 Series SECTIONS, including Ground Leak Circuit Breaker protection with 30 milliamp trip.

B. Description Of Systems
1. Refer to DRAWINGS and SCHEDULE.
a. Heat trace the following surfaces in an Ordinary Hazard Area:
1) Cooling Tower Water Piping, as shown on the DRAWINGS, with each pipe as separate circuits.
b. It shall be the CONTRACTOR'S responsibility to coordinate and ensure that properly insulated piping is provided.

C. Design Conditions
1. System shall energize automatically on sensing of low ambient conditions by duplex sensors. System shall prevent freeze-up by maintaining minimum 40 degF surface

temperature in an ambient of minus 20 degF and 20 MPH wind based on, for design purposes, of one-inch of phenolic foam insulation. Provide 15% design safety factor for aboveground piping and 25% safety factor for underground portion. Surface temperature of heat tracing element shall be limited by maximum allowable temperature of insulation materials.

D. Submittals
   1. *Shop drawing submittals for Heat Tracing Work [D,P]* shall be complete and shall clearly indicate that aboveground work has been completely coordinated with underground work.

E. Materials
   1. General: Power connections, end-seals, splices, ties, etc., made in the field shall be made with heater cable manufacturer's products.
   2. Heater Cable: Shall be self-limiting/regulating type with synthetic resin jacket and tinned copper metallic braid outer shield. Underground service jacket shall be fluoropolymer.
   3. Thermostats: Energize and control heat circuits, as stated, with adjustable set-point.

F. Heat Trace Control Panel (HTCP-2)
   1. Enclosure shall be NEMA 4X for exterior to building mounting.
   2. Panel shall be fitted with main circuit breaker, transformer, and one or two-pole terminal trip ground leak circuit breaker (GLCB) for each heater trace circuit. Provide not less than (two) spare circuits, of nominal ampacity, completely prewired to terminal blocks with corresponding panel face circuit "spare" indication provisions. Minimum short circuit interrupting capacity shall be 10,000 RMS symmetrical amperes at 120/240 VAC.
   3. In addition to white "power on" light, each circuit shall have push-to-test indicating light to visually/audibly alarm any of the following conditions:
      a. GLCB trip on over current.
      b. Loss of power to heat trace circuit.
      c. Loss of heater continuity.
   4. Fit panel with local common alarm with adjustable frequency 105 dbA/10-feet industrial duty horn and Edwards 52 RNS flashing/rotating red beacon, push-to-silence, push-to-test, and "light-on until rectified" feature.

G. Signs/Tags
   1. Provide "Electric Heat Tracing Caution" signs/tags per NEC Section 427-13.
   2. Identify each circuit with data tag.

H. Installation
   1. Install per referenced codes/standards and CONTRACT DOCUMENTS additional requirements to provide a complete functioning system.
   2. Coordinate all work with insulation applicator in a joint meeting.

I. Testing
   1. Perform all pre-post operational testing required to prove system performance and compliance with CONTRACT DOCUMENTS.

J. Follow-Up
   1. After installation/acceptance and when weather first requires system operation, system start-up engineer shall visit site to observe system operation, make any adjustment.

K. Training
   1. Provide training for OWNER'S operating and maintenance personnel.

L. Heat Trace System Source
   1. Raychem.
   2. Thermon.
   3. Nelson Electric.

2.3 MISCELLANEOUS MATERIALS

A. Bolting
   1. General Requirements: Bolting shall be certified "made in USA" and furnished with visually identifiable manufacturing source/quality.
   2. *General Service [S]:* Heavy hex head or stud per ASTM A 307, Grade B and hex nuts per ANSI B18.2.2. Square head bolts and nuts are not acceptable.
   3. *High Strength [S]:* For all ANSI Class 150 or 300 flanged joints per ANSI B31.1 Table 108.52, except where Class 125 and special case Class 250 cast iron flanges occur. Heavy hex head or stud alloy steel per ASTM A 193, Grade B7 and semi-finished heavy hex nuts per ASTM A 194, Grade 2H. Square head bolts and nuts are not acceptable. Color code to be visually identifiable in field.
   4. *Corrosion Resistant [S]:* Stainless steel, Type 304, semifinished regular hex head bolts, ASTM A 193, Grade B8, NC thread with stainless steel, Type 303, semifinished regular hex head nuts, ASTM A 194, Grade 8F, NC thread. Square head bolts and nuts are not acceptable. Certified made in USA, and visually identifiable in field.
   5. High Strength *High Temperature, Bolting High Nickel[C,P,S]*: High nickel (26% Ni/15% Cr) nominal steel, working range to 800 degF, UNC-2A thread full thread studs, ASTM A 453, Grade B660 Class B with, UNC-2B thread, heavy hex head nuts, ASTM A 453, Grade B660 Class B NOTE: This material has a coefficient of expansion similar to that of austinitic stainless steel.
   6. *High Strength High Temperature Bolting, Ferritic [C,P,S]*: Ferritic stainless steel, working range -0 to 900 degF, Type 410, UNC-2A thread full thread studs, ASTM A 193, Grade B6 with ferritic stainless steel, UNC-2B thread, heavy hex head nuts, ASTM A 194, Grade 6.

B. Caulk
   1. TYPE PTR, POLYSULFIDE: Two-part, non-sag polysulfide, with primer for unprimed surfaces.
      a. Pecora Corp. (215-723-6051) "SYNTHACALK" GC-2 and primer.
   2. TYPE RTV, Silicone: Room temperature vulcanizing, with product formulation recommended by manufacturer as suitable for service/application.
      a. Dow-Corning
      b. General Electric

c. Union Carbide Chemical and Plastics
d. Uniroyal
e. TYPE UR, Polyurethane: Single component, marine grade.
f. 3M “5200”

C. Flashing - Counterflashing
1. Sheet copper: Per ASTM B 370, not less than 16 ounces per square foot.

D. Grout
1. TYPE NS Non-Shrink Grout: Premixed, nonshrink grout, consisting of aggregate base, portland cement and sand, with all necessary plasticizers, densifiers and other control ingredients;
   a. Nonmetallic:
      1) Euclid Chemical Co. “Euco N-S Grout”.
      2) L & M Construction Chemicals “Crystex”.
      3) Master Builders “Masterflow 713”
      4) W. R. Meadows, Inc. “588 Grout”.
      5) U. S. Grout Corp. “Five Star Grout”.
2. TYPE EP Chemical/Oil Resistant Epoxy Grout: Premixed, nonshrink grout, consisting of plastic resins base, with appropriate modifiers:
   a. The Ceilcote Co. “648 Grout”.
   b. L & M Construction Chemicals “Epo Grout”.
   c. U.S. Grout Corp. “Five Star Epoxy Grout”.

E. Pipe Thread Compounds
1. Compounds: For potable water service and similar applications utilize compounds acceptable to U.S. Department of Agriculture (USDA) or Food and Drug Administration (FDA). Compounds containing lead are prohibited.
2. Inorganic zinc-rich coatings: Or corrosion inhibited proprietary compounds for GALVANIZED CARBON STEEL SYSTEMS to coat oil-free raw carbon steel surfaces, in lieu of subsequent painting.
   a. Ameron “EZ”
   b. Carboline “Carbo-Zinc 12”.
   c. ZRC.
3. Type GRAF: Proprietary corrosion inhibited and conductive graphite compounds suitable for gasoline/solvent/alcohol/fuel oils/LPG and specified (including hydro-test and flushing) fluid systems, where electrical continuity for anti-static discharge is required.
   a. Flow Control Div./Copper Industries/WKM Products (713-499-8511). “Key Graphite Paste” (non-aqueous service only).
   b. Union Carbide Chemicals & Plastics (800-822-4322) Grafoil GTS (petroleum base).
4. TYPE TFE: Use tetrafluoroethylene (Teflon) tape or sealant compound for other systems. For FRP/PVC/CPVC joints, (use correct thickness tape.)
   a. Cadillac Plastic Tape.
   b. Cajon Co. “SWAK” Part No. MS-PTS-50 Anaerobic/TFE Sealant.
   c. Jomar Seal “Heavyweight” Sealant.
   d. Permacel Tape.

e. Permatex.

F. Sleeves Wall And Floor Fireproof
1. Refer to DIVISION 15 SECTION "GENERAL MECHANICAL REQUIREMENTS."
2. *Pre-fabricated [P]:* Fit insulated piping penetrating fire rated walls or floors with slip-fit Type 360 degree shield/jacket. Up to and through 2 hour rated barrier shall be 24 gage; 3 and 4 hour rated barrier shall be 16 gauge. Jacket shall be flush on both sides of wall and underside of floor and project 2 inches above floor. Insulation shall consist of 360 degree calcium silicate insert 1 inch longer than the shield/jacket for vapor barrier lines with the thickness matching adjacent insulation.
   a. Pipe Shields, Inc. Series F1000, F500, or F8000 as appropriate.
   b. Elcen "Iso-Shield" Type 3, 360 degree insert, fire-rated.
3. *Field Fabricated System [P]:* Consisting of sleeve, packing and calking on both ends:
   a. Standard weight black carbon steel pipe sleeve with anchor lugs where required.
   b. Packing: Refractory fiber or ceramic fiber:
      1) Corborundum "Fiberfrax".
      2) Eagle Picher "Epitherm 1200".
      3) Babcock and Wilcox "Kaowool".
      4) Manville "Cerafelt".
      5) Multi-part polyurethane calk:
      6) Pecora "Dynatrol II".
      7) PRC Rubber Calk "210 and 270 Sealants".
      8) Tremco "Dymeric".
      9) Mameco "Vulkem 227".
   c. As an alternate to packing specified above, and subject to approval, a fire-rated surface silicone foam, not exceeding the foam fire rating, may be proposed.
      1) Dow Corning "3-6548 RTV Foam".
      2) Semco Div. Products Research and Chemical Corp. "PR-855".
      3) Chase Technology Corp. "CTC PR-855".
      4) Intumescent Caulk:
      5) Johns-Manville.
      6) 3M.
      7) Nelson Electric.
      8) Trimco.
4. Three-Hour Rated [P]: Provide wall sleeve and modular floor and wall seal to assure protection against the penetration of flame, smoke, gases, and water for three hours.
   a. Sleeve shall be manufactured from heavy wall welded or seamless steel pipe with full circle, continuously welded water stop plate, to assure positive water sealing on the O.D. of the sleeve and no thrust movement. Sleeve shall be finished with enriched red primer to assure metal surface protection.
      1) Thunderline "Link-Seal, Wall Sleeves".
   b. Modular floor and wall seal shall be constructed of inorganic materials to provide protection against the penetration of flames, smoke, gases, water and temperatures in excess of 1900 degF for three hours. Sealing elements shall be fire resistant silicone rubber with steel pressure plates and shall meet ASTM Standard E-119-76.
      1) Thunderline "Link-Seal, Pyro-Pac".

G. Thermal Joining Filler Materials
   1. TYPE LF, Soft Solder: Tin-antimony “95-5”; ASTM B 32-83 Alloy Grade Sb5, “Lead-Free, 0.2% Pbmax”.
   2. TYPE BA, Brazing Alloy: AWS A5.8, Classification B Cup-5. Use of brazing alloys containing lead or cadmium is prohibited.
   3. Welding Filler Metal: Furnish, store, apply materials per referenced codes and metallurgically compatible with materials being joined. See CONTRACTOR’S Welding Procedures.

H. Solution, Leak Detector Type
   1. Leak Detector Solution. Commercial type for pipe system testing.
      a. American Gas and Chemicals Inc. “Leak Tec”.
      b. Cole-Parmer Inst. Co. Leak Detector.
      c. Guy Speaker Co. Inc., “Squirt ‘n Bubbles”.

PART 3 EXECUTION

3.1 GENERAL

A. Execute the WORK in compliance with Division 15 Section “General Mechanical Requirements.”

B. Refer to Division 15 Section “Aboveground Piping Systems” for additional requirements.

C. Grooved Couplings And Fittings
   1. Use grooved couplings and fittings only in specified piping systems. Select manufacturer’s recommended gaskets for the service.
   2. For straight runs, provide rigid couplings and pipe guides at each end of run. At changes of direction, provide sufficient but not less than two flexible couplings to accommodate pipe movement without imposing bending moments on rigid joints. Grooved system components shall be obtained from a single manufacturing source. At pumps, provide welded piping joints, unless otherwise approved.

D. Air Vents
   1. Install air vent valves at all pressurized liquid piping systems and equipment water box high points and where indicated.
   2. Provide automatic air vent valves with isolation valves in condenser water box, water lines, except potable water lines, and drainage piping to points indicated or to points of disposal approved by the authorities having jurisdiction. Other vents shall be manual type installed in easily accessible locations.

E. Water Hammer Arresters
   1. Prevent hammer in liquid lines; size and locate water hammer arresters per the manufacturer’s published instructions. Submit shop drawings showing details of installation and location for approval.

F. Escutcheons
   1. Provide escutcheons at building surface penetrations of piping into finished areas. Size the plates to fit around insulation and conceal openings in building construction.
   2. Mount one-piece chrome-plated escutcheons on chrome plated pipe or tubing and one-piece or split pattern type elsewhere.

G. Expansion Joints And Flexible Connectors
   1. Install piping supports, anchors and guides related to expansion joints and flexible connectors per manufacturer's instructions.

H. Flashing And Counterflashing
   1. Provide flashing and counterflashing to maintain building weathertightness.

I. Where piping passes through fire rated walls and floors, or walls and floors of buildings more than two stories high, fill voids and cavities around wall and floor penetrations with firestopping and smoke sealing materials to maintain the required fire-rated condition of substrate.

3.2 FIELD QUALITY CONTROL

A. General
   1. Refer to Division 15 Section "General Mechanical Requirements" for additional requirements.

B. Testing Of Equipment
   1. Test equipment per manufacturer's published instructions, and as specified for the system.

END OF SECTION

Revision History	
Date	**Rev. No.**
A	0
B	0
C	0
D	0
E	0
F	0
02-19-09	0

LMS/djo
Y:\d\timsdatasf\BROOKHAVEN_NATIONAL_LABORATORY\SF070003\200-PROJEXEC\280-SPEC\15120.doc

SECTION 15130

PUMPING EQUIPMENT

PART 1 GENERAL

1.1 SUMMARY

A. Scope
   1. Provide pumping equipment as shown, scheduled or specified, complete with components and accessories necessary for fully functional operating systems.

B. Related Work Specified Under Other Sections
   1. Division 15 Section "General Mechanical Requirements."
   2. Division 15 Section "Aboveground Piping Systems."
   3. Division 15 Section "Valves."
   4. Division 15 Section "Piping Specialties."
   5. Division 15 Section "Atmospheric Cooling Equipment."
   6. Division 13 Sections for Instrumentation and Control Work.
   7. Division 16 Sections for Electrical Work.
   8. Division 09 Sections for Finish Field Painting.

1.2 QUALITY ASSURANCE

A. Installation Supervisor
   1. Include the services of a competent engineer to supervise the installation, and at a later date, test and provide technical assistance and instructions with reference to the operation and maintenance of the pumps. The number of days included shall be adequate to cover the installation, test and operation.

B. Vibration Control Design
   1. Under installed, operating conditions, equipment and piping vibration measured at specified or approved points in mils peak-to-peak displacement or velocity in inches/second shall not exceed the following:
      a. Limits specified in the latest edition of the ASHRAE Handbook: HVAC Applications, Sound and Vibration Control Section.
      b. Limits for motors shall be per NEMA MG-1 standards.

C. Noise Control Design
   1. Under installed, operating conditions, equipment and piping vibration measured at specified or approved points in mils peak-to-peak displacement or velocity in inches/second shall not exceed the following:
      a. Limits specified under specific equipment.
      b. Limits specified in the latest edition of the ASHRAE Handbook: HVAC Applications, Sound and Vibration Control Section.
      c. Limits for motors shall be per NEMA MG-1 standards.

d. Refer to Division 15 Section “General Mechanical Requirements” for other specific noise criteria.

1.3 SUBMITTALS

A. Furnish submittals for items that are identified in this SECTION by a different typeface and a bracketed code (e.g., *Item [L]*). Refer to Division 01 Section “Shop Drawings, Product Data And Samples” for definition of codes for types of submittals and the administrative requirements governing submittal procedure. Additional submittal requirements pertaining to this SECTION are specified herein under this Article.

B. Shop drawings for pumping equipment shall include curves, exact selection points, exact impeller diameters, cuts, statements, calculation and data sheets required to verify or clarify the manufacturer’s conformance to requirements specified. Provide sound pressure levels for each pump assemblage, list on attached shop drawing submittal form. Where not otherwise specified, provide manufacturer’s “installed” vibration limits in mils, peak-to-peak displacement, based on G=0.05AF/2. Include:
   1. Plan and elevation views showing dimensions and details required for installation, including anchor bolt locations and total weight of unit assemblage.
   2. Selected views as required to describe accessories and show required connections and dimensions.
   3. Electrical system and instrumentation connections for packaged self-contained equipment.
   4. Piping system connections.

C. For each pump, include materials, performance curves, sizes, catalog data and other data necessary to verify compliance with CONTRACT DOCUMENTS.

D. Test reports. Provide as described under “QUALITY ASSURANCE”.

1.4 OPERATION AND MAINTENANCE DATA

A. Provide installation, operation, lubrication and maintenance instructions and spare parts data manuals, per Division 01 Section “Operating and Maintenance Data.”

B. For packaged self-contained equipment furnish complete sets of instruction books with depth of coverage sufficient for OWNER personnel training and operational use. Include description and an installation man-hours estimate of items shipped loose for field installation. If CONTRACTOR is required to provide supplementary materials, identify same.

C. Include on standard forms from the vibration test equipment manufacturer, for each equipment item tested, dated copies of equipment vibration levels with tabulation of readings, points and direction read to reflect equipment data at the time of acceptance. Provide complete data of test equipment used.

D. Provide one complete set of special tools as recommended by the manufacturer for field maintenance. Tools shall be contained in a locked toolbox and four keys shall be provided.

PART 2 PRODUCTS

2.1 CENTRIFUGAL PUMPS

A. General
   1. Pumps shall be per Standards of the Hydraulic Institute and the requirements specified herein except as otherwise specified for specific pumps.
      a. Base nonoverloading characteristics for pumps upon nameplate horsepower, at any point on performance curve.
      b. Required NPSH less than available NPSH by not less than 3 feet.
      c. Maximum impeller diameter not greater than 90% of maximum published diameter for a given casing and not smaller than smallest published diameter for casing. Do not base acceptable maximum diameter calculation on percentage of impeller diameter range for a given casing.
      d. Proposed pump efficiency not less than that scheduled.
      e. Pump speed limited to 1800 RPM except as specified.
      f. Select at the point of maximum efficiency for a given impeller-casing combination. Deviations within 3% of maximum efficiency on the increasing capacity side of the maximum efficiency point and 3% on the decreasing capacity side of the maximum efficiency point are permissible.
      g. High efficiency motor shall be per Section 15050 General Mechanical Requirements.

B. Selection
   1. *Centrifugal split case pumps [D,P]:* Manufacturer's standard pumps per minimum requirements specified herein. Units shall be horizontal, single-stage, double suction, single or double volute, base mounted centrifugal type.
      a. Peerless Series AE.
      b. ITT Goulds 3400 Series.

C. Construction
   1. Casing. Cast iron with a design working pressure of not less than 185 PSIG at 100 degF. Piping connections in sizes 2 inches and larger shall be flanged per ANSI B16.1. Furnish casing with tapped openings for air venting, priming, draining and for suction and discharge gages. Construct casing so that seals are convertible from mechanical to packing service without machining of casing.
   2. Wearing Rings. Provide in every pump case and on impellers larger than 7 inches diameter.
   3. Impellers. Enclosed, cast bronze, with smooth waterways, keyed to shaft in a fixed axial position by means of lock nuts. Comply with maximum and minimum diameter requirements. Protect impeller against damage due to reverse rotation.
   4. Shaft:
      a. For mechanical seal (water) service, provide solid AISI 300 Series stainless steel shaft. Construct shaft to prevent seal or bearing failure due to vibration. Set first critical speed at least 25% above operating speed but not less than 4000 RPM. Total shaft peak-to-peak dynamic deflection measured by vibrometer at pump seal face not to exceed 2.0 mils under shut-off head operating conditions. Fit with bronze or nylon

water slingers at each bearing and seal at casing interface with a small clearance bronze throttling bushing.

5. *Mechanical Seals [D]:* Balanced or unbalanced, requiring no shaft or sleeve shoulder. AISI 18-8 stainless steel trim. Tungsten carbide to tungsten carbide or to silicon carbide stationary and rotating contacting surfaces. EPT or equivalent elastomer.
   a. John Crane Packing Co..
   b. Durametallic Corp.
   c. Advanced Sealing Technology, Inc.
6. Pump manufacturer shall provide seal chamber flushing water at a pressure, at bushing clearance flow rate, sufficient to satisfy seal lubrication and heat rejection requirements.
7. Centrifugal Abrasives Separators. Pump "Mechanical Seals" shall be flushed with pump discharge water cleansed by centrifugal force in a cyclone abrasives separator. Separator shall be constructed of AISI Type 316 stainless steel. Pipe underflow to hub outlet or other visible point of discharge.
   a. Durametallic Corp..
   b. John Crane Packing Co.
   c. Advanced Sealing Technology, Inc.
8. Bearings and Lubrication.
   a. Heavy duty ball or roller type with provisions for the mechanical and hydraulic radial and thrust loads imposed by any normal service condition. Manufactured from vacuum degassed or processed alloy steel and made in U.S.A. Certified L-10 rated life of not less than 30,000 hours or an average life of 150,000 hours. Provide oil-flood lubricated bearings with oil sumps fitted with 4 ounce constant level sight oilers and positive means of sump drainage and condensate detection. Include spring loaded brass plug cocks connected to lowest part of bearing sump. Bearing housings shall be cast iron, self-aligning on metal to metal surfaces and shall totally enclose bearings.
   b. Heavy duty ball or roller type with provisions for the mechanical and hydraulic radial and thrust loads imposed by any normal service condition. Manufactured from vacuum degassed or processed alloy steel and made in U.S.A. Certified L-10 rated life of not less than 30,000 hours or an average life of 150,000 hours. Grease lubricated, provided with surface ball type grease supply fittings and with grease relief fittings located at bottom of bearing.
9. *Flexible Coupling [D]:* Pump shaft shall be connected to the motor shaft through a flexible coupling. The flexible member shall be a tire shape, in shear, or a solid mass serrated edge disc shape, made of polymer materials suitable for constant or variable speed operation, as Scheduled, and retained by fixed flanges. Flexible coupling shall act as a dielectric connector and shall not transmit sound, vibration or end thrust.
   a. Dodge "Paraflex".
   b. Falk "Torus".
   c. Kop-Flex "Elastomeric".
   d. T. B. Woods "Sureflex".
10. Bedplate. Mount pump and driver on a common bedplate, which shall be hollow cast iron, multi-ribbed for maximum rigidity, with grout holes, grout air vents, drip rim and drain tapping. In lieu of cast iron, bedplate may be a fabricated steel base constructed of a rolled structural steel perimeter frame, reinforced and cross braced internally with pipe or rolled

structural members, capped with 3/8 or 1/2 inch steel plate and provided with grout holes, grout air vents, drip rim or sloped collection chamber construction and drain tapping. Formed or bent steel bedplates are not acceptable.

11. Balancing. Statically and dynamically balance impellers and rotating element, if necessary to comply with specified limits.
12. Guard. Per the applicable requirements of the Occupational Safety and Health Act (OSHA). Enclose coupling and rotating components. Use angle iron frame and enclosing 18 gage sheet steel. Secure in place to be easily removable for access.
13. Nameplates. In addition to standard nameplate data, furnish the following data, modified as necessary, on a 1/16 inch thick brass, deeply stamped, separate nameplate or manufacturer's standard, but extra large nameplate, attached to pump base. Manufacturer's pump serial number; OEM model number of each bearing; recommended lubricant; OEM gasket type and thickness for casing joints and bearing cap cover; OEM mechanical seal identification.

2.2 LINE MOUNTED PUMPS

1. *TYPE A [D,P]:* Single stage, end suction centrifugal line-mounted pump. With casing and seal suitable for operating at pressures up to 125 PSI at temperatures to 250 degF, bronze or stainless steel fitted, AISI 300 Series stainless steel or the manufacturer's standard alloy steel pump shaft with nonferrous sleeve. Couplings shall be elastomer-in-shear type or four-spring type. Provide mechanical seals designed for service with water normal to the system. Bearings shall be permanently lubricated.
   a. Aurora Pump.
   b. American Marsh.
   c. Bell and Gossett.
   d. Grundfos.
   e. Taco.

2.3 CONDENSATE RETURN UNIT

A. *Condensate Return Unit [D,P]:* Close-coupled Centrifugal, duplex packaged self-contained unit, with automatic controls including starter and alternator which will automatically transfer the operation from one pump to the other, and will also operate both pumps in the event of abnormal conditions. Pumps designed to operate at 209 degF without vapor binding and without cavitation under system operating conditions. The only acceptable means of rectification of cavitation shall be by replacement of entire pump assembly. Furnish cast iron or steel receivers with a mechanical alternating float switch, seamless copper float, gauge glass, strainer on the return inlet, and dial thermometer. Furnish receiver with capability to withstand an internal pressure of 50 PSIG and sized for capacity as Scheduled.

1. American Marsh Pumps, Inc. Type CV.
2. Domestic Pump Company, Type CB.
3. Roth Pump Co.

2.4 SUMP PUMP

A. General
   1. *Sump Pump [D,P]:* Packaged duplex non-clog wastewater lift station shall include: submersible pumps; discharge connection; guide bars (3 inch Schedule 40 galvanized pipe); upper guide bracket; cable holder; liquid level sensors; control panel; intercomponent piping and wiring; pump lift chains; chain hook.

B. Pump
   1. *Pump [D,P]:* Totally submersible, sewage type with a 460 volt, 3 phase, 60 Hertz motor and supplied with a mating cast iron discharge connection. Pump capacity shall be as indicated.
      a. Flygt Model CP-3085-MT.
      b. Hydromatic.

C. Controls
   1. Control panel to be NEMA 12 dead front enclosure containing combination starter, with fused disconnect switch, selector switch, control circuit transformer, 120 volt, 60 watt marine type alarm light mounted on top of panel and wired thru control circuit breaker, audible alarm horn with silencing push button, terminal blocks, necessary intercomponent wiring.
   2. Provide a high-water alarm switch complete with actuating mechanism for operation on an electrical circuit other than the pump motor circuit. Design switch to operate indicated and specified alarm devices whenever a predetermined high water level is reached in the sump because of pump failure or fluid inflow that exceeds the capacity of pump.
   3. Manufacturers:
      a. *Control panel [D]*:
         1) Flygt Model FMC-200.
         2) Hydromatic Q Panel.
      b. *Level controls [D,P]*:
         1) Flygt Model ENH-10.
         2) Hydromatic.

D. Lift station galvanized steel guide rail system shall include:
   1. Upper bracket.
   2. Chain hook.
   3. Cable holder.
   4. Anchor bolts.
   5. Lifting chain.
   6. Guide bars.

PART 3 EXECUTION

3.1 INSTALLATION AND RUN-IN

A. Perform installation and related WORK under the direction of an authorized representative of the manufacturer.

B. Pumps mounted on concrete bases or foundation shall be grouted in place in accordance with manufacturers instructions.

C. Provide pump discharge check valves as specified under Division 15 Section "Valves", SPECIAL SERVICE VALVES. Install check valves in horizontal position, not in vertical.

D. Perform field run-in under the direction of an authorized representative of the manufacturer who shall inspect, make critical adjustments, start-up and run-in each pump after installation, to verify a complete, properly functioning, installation with capacity as scheduled.

E. In addition to manufacturer's requirements, the authorized representative shall:
   1. Instruct CONTRACTOR to check for correct direction of motor rotation only after system is full of operating liquid.
   2. Verify that pump casing is free of any external piping loads when piping is full of operating liquid and that installation is correct.
   3. Verify that alignment of centrifugal pumps and motors is within 50% of manufacturer's maximum allowable limits, but in no case shall angularity exceed 1/2 degree and parallel misalignment exceed 0.002 inch.
   4. Verify correct functioning and adjustments of pump controls.
   5. Provide the services of an authorized representative of the manufacturer for start-up and personnel training.
   6. Re-check adjustments after run-in period.
   7. Furnish two record copies of adjustments.

3.2 FIELD QUALITY CONTROL

A. Shop Tests
   1. Perform manufacturer's standard shop tests for each component to ensure compliance with intent of these SPECIFICATIONS.

B. Field Start-Up Vibration Test
   1. At time of start-up, the manufacturer's qualified, authorized representative, shall test, with a certified, calibrated vibrometer, readable to 0.0001 inch displacement, rotating machinery and deliver two copies of readings. Readings shall be taken in the presence of the ARCHITECT-ENGINEER.
   2. Test motors for vibration in excess of NEMA prescribed standard limits or manufacturer's more stringent limits.
   3. Test pumps for vibration within specified limits under shut-off head and design capacity operation.

4. Immediately replace any faulty bearing and rectify any other cause of vibration to bring equipment into compliance with the CONTRACT DOCUMENTS.

C. Field Tests During Guarantee Period
1. GENERAL
   a. If the testing or retesting of the unit furnished should indicate failure to meet the requirements of the CONTRACT DOCUMENTS, provide whatever additions, modifications or replacements may be necessary to provide a unit which fully conforms to these performance requirements. Repair work shall be scheduled at a time convenient to the facility being served.
   b. Testing to determine compliance or lack of compliance with requirements of CONTRACT DOCUMENTS shall be performed per the following:
      1) Testing procedures for items not delineated in CONTRACT DOCUMENTS, shall be mutually agreed upon, in writing, prior to start of testing.
      2) Test procedure participant's costs shall be borne by:
   c. OWNER if compliance is verified.
   d. The CONTRACTOR if testing indicates failure to comply.
   e. Testing will be performed in the presence of the ARCHITECT-ENGINEER.
2. EQUIPMENT VIBRATION
   a. In the event that ARCHITECT-ENGINEER determines that testing is required, specified limits of vibration shall be verified under operating conditions by an independent equipment and testing source.
   b. Entek IRD.
   c. Other approved.
3. PERFORMANCE TESTING
   a. In the event that ARCHITECT-ENGINEER determines that testing is required, the test procedures of the Hydraulic Institute shall be utilized.

END OF SECTION

Revision History	
Date	**Rev. No.**
A	0
B	0
C	0
D	0
E	0
F	0
02-19-09	0

LMS/djo
Y:\d\timsdatasf\BROOKHAVEN_NATIONAL_LABORATORY\SF070003\200-PROJEXEC\280-SPEC\15130.doc

SECTION 15212

COMPRESSED AIR DRYER AND AFTERFILTER

PART 1 GENERAL

1.1 SUMMARY

A. Provide labor, materials and equipment necessary to furnish the indicated factory assembled and tested, packaged, self-contained, ADSORPTION COMPRESSED AIR DRYERS, including accessories as required for a complete, properly functioning, installation.

B. Related Work Specified Under Other Sections
   1. Division 15 Section "General Mechanical Requirements."
   2. Division 15 Section "Aboveground Piping Systems."
   3. Division 15 Section "Screw Type Air Compressor."
   4. Division 16 Sections for Electrical Work

1.2 QUALITY ASSURANCE

A. Requirements Of Regulatory Agencies
   1. Provide materials and equipment and execute the WORK, including test and inspections, per applicable provisions of Federal, State and local Government laws and ordinances and referenced codes and standards. Governing laws, ordinances, codes and standards constitute minimum requirements.

B. Source Quality Control
   1. Perform standard shop tests for each component to ensure compliance with intent of these SPECIFICATIONS.
   2. The dryer shall be given a factory "run-in" at rated load.
   3. Materials and equipment shall be the products of a manufacturer regularly engaged in the manufacture of such products, shall essentially duplicate equipment that has been in satisfactory service prior to issue date of this SPECIFICATION and shall be supported by a service organization that is reasonably convenient to the site.

C. Shop Tests
   1. Give dryer a factory "run-in" at rated load, and calibrate controls and instruments.
   2. Additional shop tests shall be as deemed necessary to assure performance in accordance with the CONTRACT DOCUMENTS, at the OWNER'S facility.

1.3 SUBMITTALS

A. Shop Drawings And Product Data
   1. Furnish submittals for items that are identified in this SECTION by a different typeface and a bracketed code (e.g., *Item [L]*). Refer to Division 01 Section "Shop Drawings, Product Data, and Samples" for definition of codes for types of submittals and the

administrative requirements governing submittal procedure. Additional submittal requirements pertaining to this SECTION are specified herein under this Article.

2. Shop drawings shall delineate provisions for obtaining required performance under project service conditions. Performance data shall be certified to be applicable to project service conditions.
3. Shop drawings submittals shall include clearly delineated verification of compliance with the elements of the CONTRACT DOCUMENTS, performance, details of configuration, construction, support, functional ancillary provisions, utilities including power connections, wiring diagrams and sequence of operations, installation details for construction field conditions, and vibration amplitude limits for rotating equipment.
4. Submit integrated electrical drawings indicating power, control and instrument wiring interfacing with work under separate contracts for field work as well as factory assembled WORK. CONTRACTOR'S electrical drawings are acceptable only when modified and supplemented to exactly reflect CONTRACT conditions. The "system" of drawings shall include overall schematic (elementary) diagram of the entire system of power circuitry detailing the number of and the wire and conduit sizes, wiring diagrams showing the wiring layout of component assemblies or systems, interconnection wiring diagrams showing terminations of interconnecting conductors between component assemblies, systems, control devices, and control panels with interconnections, and sequence of operation for components, assemblies of systems.

B. Test Reports
   1. *Test reports [T]:* Submit air dryer test performance test data.

C. Certificates
   1. Certificate: Submit manufacturer's data report, Form U-1.

D. Guarantee
   1. Guarantee the unit to meet the operating conditions, capacity and performance conditions as specified and to remain serviceable for the following specified period. If either the unit or accessories fail to meet operating requirements or if failure of any part occurs during the guarantee period, rework or replace the affected items promptly to meet the CONTRACT requirements at no cost to the OWNER.
   2. The OWNER reserves the option to request a performance test throughout the warranty period.
   3. Based on no performance test, warranty shall extend for two years from date of initial operation. If a performance test is made and the machine meets its guaranty, the warranty shall be as above. If unit fails to meet its guaranteed performance, then warranty shall extend twenty-four months from date of acceptance of modified unit.

1.4 OPERATING AND MAINTENANCE DATA

A. Furnish, per Division 01 Section "Operating and Maintenance Data", installation, operation, lubrication and maintenance instructions and spare parts data manuals for equipment provided under this CONTRACT.

B. Manuals shall incorporate data to enable operators and maintenance personnel to understand the equipment, its potentialities, limitations and maintenance needs. Data on design, construction, installation and operating features shall be included. Data submitted shall exclude content, which is not applicable to equipment purchased under this CONTRACT. Manuals shall include the following:
   1. Diagrams (See Shop Drawings requirements).
   2. System OEM Components and assembly drawings as-built.
      a. Performance: Normal and abnormal conditions.
      b. Installation.
      c. Operation.
      d. Trouble-shooting.
      e. Safety precautions.
      f. Maintenance and repair.
      g. Nearest authorized representative and stocking spare parts source.
      h. Recommended spare parts.

1.5 PERSONNEL INSTRUCTION

A. Provide necessary instruction to OWNER'S installing contractor.

B. Provide, prior to start-up, not less than 8 "classroom" and necessary field training hours for OWNER'S operating and maintenance personnel, upon mutually satisfactory arrangement with OWNER.

PART 2 PRODUCTS

2.1 COMPRESSED AIR DRYER

A. General
   1. Adsorptive desiccant type compressed air dryer utilizing heat of compression for regeneration. Unit shall be fail-safe, complete with rotating desiccant drum with drying section and regeneration section, water cooled regeneration air cooler, water separator, automatic condensate drain, safety drain, rotating drum drive motor, and all connection parts.

B. Dryer Housing
   1. Tank shall be designed, constructed and stamped in accordance with ASME Boiler and Pressure Vessel Code, Section VIII. Tank shall be fitted with wet air inlet, ejector, regeneration air inlet, regeneration cooler inlet and outlet connections, dry air outlet, condensate drain outlet, built in water separator, and dew point indicator.
   2. Motor driven rotating desiccant drum shall be glass fiber impregnated with silica gel.

C. Cooler
   1. Water cooled regeneration cooler to condense water vapor during regeneration. Provide cooler with: Manufacturers standard admiralty brass, stainless steel or 90/10 copper-nickel

tubes; nonferrous tube sheets and baffles; standard shell construction. Tube bundle shall be removable.

D. Intercomponent Piping
   1. Provide intercomponent air, cooling water, and condensate piping ready for single field connection to each utility service. Piping shall be per ANSI/ASME B31.1.
   2. Provide dry air piping for pilot or control air equipment. Equipment shall include a pilot air filter. Valve operators shall be supplied with permanently lubricated packing. Liquid oil lubricators will not be permitted.
   3. Four-way directional valves shall be manufacturer's standard for the application.

E. Painting And Protection
   1. Prime and finish paint uninsulated surfaces using manufacturer's standard paint. Fit openings with suitable removable protective covers prior to shipping.

F. Manufacture
   1. Atlas Copco, MD 400.
   2. Other approved.

2.2 AFTERFILTER

A. Provide downstream of dryer with capacity as Scheduled on the DRAWINGS.

B. Filter housing shall be constructed of welded carbon steel and stamped in accordance with ASME Code VIII, Div I with a maximum working pressure of 250 psig at 225 ºF. Fit housing with manufacturers' standard electronic zero air loss condensate drain valve.

C. Filter cartridge shall be 99.99% efficient at 0.01 micron meter. Filter media shall be capable of 150 ºF operating temperature.

D. Manufacture
   1. Atlas Copco, PD 1050F.
   2. Other approved.

PART 3 EXECUTION

3.1 GENERAL

A. Fabricate and assemble air dryers and related equipment per specified requirements. Shop test in the presence of the OWNER. Disassemble as required for shipment. At site, supervise installation and test until acceptance by OWNER and supervise and participate in OWNER personnel training.

3.2 FIELD TESTS

A. Verify proper operation and performance of air dryer unit including all operating and safety controls.

B. Record all compressed air dryer instrument readings during testing for inclusion in testing report submitted to the OWNER.

END OF SECTION

Revision History	
Date	**Rev. No.**
B	0
C	0
D	0
E	0
F	0
02-19-09	0

LMS/djo
Y:\d\timsdatasf\BROOKHAVEN_NATIONAL_LABORATORY\SF070003\200-PROJEXEC\280-SPEC\15212.doc

THIS PAGE INTENTIONALLY LEFT BLANK

SECTION 15215

SCREW TYPE AIR COMPRESSOR

PART 1 GENERAL

1.1 SUMMARY

A. Provide labor, materials and equipment necessary to furnish the indicated factory assembled and tested, packaged, self-contained, ROTARY SCREW AIR COMPRESSOR, including accessories as required for a complete, properly functioning, installation.

B. Related Work Specified Under Other Sections
   1. General Mechanical Requirement - SECTION 15050.
   2. Aboveground Piping Systems - SECTION 15105.
   3. Electrical Work - 16000 Series SECTIONS

1.2 QUALITY ASSURANCE

A. Requirements Of Regulatory Agencies
   1. Provide materials and equipment and execute the WORK, including test and inspections, per applicable provisions of Federal, State and local Government laws and ordinances and referenced codes and standards. Governing laws, ordinances, codes and standards constitute minimum requirements.

B. Source Quality Control
   1. Perform standard shop tests for each component to ensure compliance with intent of these SPECIFICATIONS.
   2. The compressor shall be given a factory “run-in” at rated load.
   3. Materials and equipment shall be the products of manufacturers regularly engaged in the manufacture of such products, shall essentially duplicate equipment that has been in satisfactory service at prior to issue date of this CONTRACT and shall be supported by a service organization that is reasonable convenient to the site.

C. Vibration Control Design
   1. Under installed, operating conditions, equipment and piping vibration measured at specified or approved points in mils peak-to-peak displacement or velocity in inches/second shall not exceed the following:
      a. Double amplitude vibration of the rotary screw compressor in any plane measured on each shaft of each bearing housing shall not exceed 0.75 mils.

D. Noise Control Design
   1. Equipment noise in this section shall not exceed 67 level in dBA five feet from the unit measured in the free field per applicable standards.

1.3 SUBMITTALS

A. Shop Drawings And Product Data
   1. Furnish submittals for items that are identified in this SECTION by a different typeface and a bracketed code (e.g., *Item [L]*). Refer to Division 01 Section "Shop Drawings, Product Data, and Samples" for definition of codes for types of submittals and the administrative requirements governing submittal procedure. Additional submittal requirements pertaining to this SECTION are specified herein under this Article.
   2. Shop drawings shall delineate provisions for obtaining required performance under project service conditions. Performance data shall be certified to be applicable to project service conditions.
   3. Shop drawings submittals shall include: Clearly delineated verification of compliance with the elements of the CONTRACT DOCUMENTS, performance, details of configuration, construction, support, functional ancillary provisions, utilities including power connections, wiring diagrams and sequence of operations, installation details for construction field conditions, and vibration amplitude limits for rotating equipment.
   4. Submit integrated electrical drawings indicating power, control and instrument wiring interfacing with work under separate contracts for field work as well as factory assembled work. CONTRACTOR'S electrical drawings are acceptable only when modified and supplemented to exactly reflect CONTRACT conditions. The "system" of drawings shall include: Overall schematic (elementary) diagram of the entire system of power circuitry detailing the number of and the wire and conduit sizes, wiring diagrams showing the wiring layout of component assemblies of systems, interconnection wiring diagrams showing terminations of interconnecting conductors between component assemblies, systems, control devices, and control panels with interconnections, and sequence of operation for components, assemblies or systems.

B. Certificates
   1. Certificate: Submit manufacturer's data report, Form U-1.
   2. *Test reports [T]*: Submit shop tests.

C. Guarantee
   1. Guarantee the unit to meet the operating conditions, capacity and performance conditions as specified and to remain serviceable for the following specified period. If either the unit or accessories fail to meet operating requirements or if failure of any part occurs during the guarantee period, rework or replace the affected items promptly to meet the CONTRACT requirements at no cost to the OWNER.
   2. The OWNER reserves the option to request a performance test throughout the warranty period.
   3. Based on no performance test, warranty shall extend for two years from date of initial operation. If a performance test is made and the machine meets its guaranty, the warranty shall be as above. If unit fails to meet its guaranteed performance, then warranty shall extend twenty-four months from date of acceptance of modified unit.

1.4 OPERATING AND MAINTENANCE DATA

A. Furnish, per Division 01 Section "Operating and Maintenance Data," three copies of installation, operation, lubrication and maintenance instructions and spare parts data manuals for equipment provided under this CONTRACT.

B. Manuals shall incorporate data to enable operators and maintenance personnel to understand the equipment, its potentialities, limitations and maintenance needs. Data on design, construction, installation and operating features shall be included. Data submitted shall exclude content, which is not applicable to equipment purchased under this CONTRACT. Manuals shall include the following:
   1. Diagrams (See Shop Drawing requirements).
   2. System OEM Components and assembly drawings as-built.
   3. Equipment brochures, data and catalog cuts including:
      a. Performance: Normal and abnormal conditions.
      b. Installation.
      c. Operation.
      d. Trouble-shooting.
      e. Safety precautions.
      f. Maintenance and repair.
      g. Nearest authorized representative and stocking spare parts source.
      h. Recommended spare parts.
      i. Certified Bid Evaluation Form.

1.5 PERSONNEL INSTRUCTION

A. Provide necessary instruction to OWNER'S installing CONTRACTOR.

B. Provide, prior to start-up, not less than 8 "classroom" and necessary field training hours for OWNER'S operating and maintenance personnel, upon mutually satisfactory arrangement with OWNER.

1.6 TOOLS

A. Provide one complete set of special tools as recommended by the CONTRACTOR for field maintenance. Tools shall be contained in a locked toolbox and four keys shall be provided.

PART 2 PRODUCTS

2.1 SCREW TYPE AIR COMPRESSOR

A. General
   1. *Packaged, oil-free, screw type air compressor [D]*: Provide with motor and variable speed drive on a common steel base, enclosed in a silencing canopy, with intake filter-silencer, intercooler and aftercooler, outlet silencer, single point inlet and outlet connections, complete pre-piped lubricating oil circuit, built-in oil breather system,

complete pre-piped cooling water circuit, blow-off silencer and control valve, inlet valve and control, by-pass valve, check valve, hot compressed air outlet with horizontal and vertical bellows expansion joints, motor starters, and control panel with micro processor based control and monitoring.

2. Wherever possible, install, wire, pipe, test, and ship all components and accessories as a ready-to-run package.
3. For all components requiring hoisting for installation and/or maintenance, provide suitable lifting attachments.
4. Manufacturers:
   a. Atlas Copco, Model ZR 160.
   b. Ingersoll-Rand.
   c. Sullair Corp.
   d. Gardner-Denver.

B. Controls And Control Panel
1. Panel shall be manufacturer's standard compressor mounted NEMA 1 enclosure modified as necessary to contain specified operating controls and supervisory controls.
2. Control system shall perform the following functions:
   a. Compressor start-stop.
   b. Compressor protection by means of service and warning indications.
   c. Compressor shut down in the event of a fault.
   d. Pressure maintenance for optimum efficiency.
   e. Display the following data:
      1) Working pressure.
      2) Operating temperatures.
      3) Number of motor starts.
      4) Operating hours.
      5) Compressor status during last five shutdowns and emergency stops.
   f. Indicating lights to monitor the following conditions:
      1) Power on.
      2) Permissive compressor start.
3. Safety switches wired to common terminal block to shut down the compressor and sound alarm for any of the following conditions:
   a. Excessive vibration.
   b. Low lubricating oil pressure.
   c. High lubricating oil temperature.
   d. High air temperature between stages.
4. Provide safety switches to sound alarm for high vibration conditions.
5. Single isolated SPDT switch to activate a remote annunciating device in the event of an alarm or safety shutdown.
6. All control circuits shall be 120 volts, 60 hertz.
7. Adjustable motor overload controller capable of limiting compressor capacity to prevent overloading the drive motor.
8. Wiring shall be per ANSI C1 with intercomponent wiring in conduit.

C. Motors
   1. Compressor drive motor: Squirrel cage, open drip-proof, 460 volt, 3 phase, 60 hertz, 1.15 service factor, 90 degC temperature rise over 40 degC ambient per NEMA MG-1.
   2. Auxiliary lubricating oil pump motor: Base mounted, open drip-proof, 460 volt, 3 phase, 60 hertz, design B induction type.
   3. Motor noise shall not exceed limits specified for compressor. Test procedure for determining noise levels shall be in accordance with IEEE No. 85. Ref: 0.0002 Microbars-Microphone distance three feet from source.

D. Motor Starters
   1. Combination across-the-line type, 5kV, fused motor starter [D] in NEMA 12 enclosure.

PART 3 EXECUTION

3.1 EQUIPMENT INSTALLATION

A. Install equipment per scheduled and specified requirements.

B. Install equipment under the direction of the manufacturer's authorized field representative.

C. Perform field start-up and run-in under the direction of an authorized representative of the manufacturer who shall inspect, make critical adjustments of equipment and calibration of controls, to verify a complete, properly functioning installation with capacity as scheduled.

3.2 QUALITY CONTROL

A. Equipment Testing
   1. Demonstrate correct functioning of equipment, controls, safety devices and alarms.
   2. OWNER reserves the right to request a performance test in accordance with CAGI-PNEUROP/ASME Code PTC-9 or PTC-10 as applicable on the unit after installation in the field. Compressor test will not be requested until after a run-in period of approximately 500 hours. If the compressor and related equipment fail to meet the guaranteed performance, the CONTRACTOR shall assume all costs and furnish all necessary labor, material, test equipment, and supervision for the installation and removal of the equipment before and after completion. If compressor and related equipment meets guaranteed performance, OWNER will assume all costs for the field test.

3. In the event the compressor fails to meet the guaranteed performance, furnish labor and materials to make the necessary revisions and re-test the unit until it meets the guarantee and is accepted by the OWNER. The guarantee shall then extend 12 months from the date of acceptance of the modified machine by the OWNER.
4. OWNER reserves the right to engage the services of a qualified independent testing laboratory to check vibration and noise levels.

END OF SECTION

Revision History	
Date	**Rev. No.**
A	0
B	0
C	0
D	0
E	0
F	0
02-19-09	0

LMS/djo
Y:\d\timsdatasf\BROOKHAVEN_NATIONAL_LABORATORY\SF070003\200-PROJEXEC\280-SPEC\15215.doc

SECTION 15218

COMPRESSED AIR RECEIVER

PART 1 GENERAL

1.1 SUMMARY

A. Scope
1. Furnish F.O.B. OWNER'S project site with insurance and freight prepaid the compressed air receiver hereinafter specified.

B. Description
1. Capacity (approximate), diameter, straight side length, and nozzle orientation as shown on the DRAWINGS.
2. Temperature range - 125 degF. max., 65 degF. min.
3. Design pressure - 150 PSIG

C. Related Work Specified Under Other Sections
1. Division 15 Section "General Mechanical Requirements."
2. Division 15 Section "Aboveground Piping Systems."

1.2 QUALITY ASSURANCE

A. Requirements Of Regulatory Agencies
1. Provide materials and execute the WORK, including tests and inspections per applicable provisions of Federal, State and local Government laws and ordinances and referenced codes and standards. Governing laws, ordinances, codes and standards constitute minimum requirements.

B. Shop Test
1. Hydrostatically test to not less than 1.5 times the specified design working pressure.

1.3 SUBMITTALS

A. General
1. Provide certified shop drawings, illustrating construction, weight, and supporting or related facilities interfacing data to permit proper evaluation.
2. Submit certified copies of all factory test data and inspection reports.

B. Shop Drawings And Product Data
1. Furnish submittals for items that are identified in this SECTION by a different typeface and a bracketed code (e.g., *Item [L]*). Refer to Division 01 Section "Shop Drawings, Product Data, and Samples" for definition of codes for types of submittals and the administrative requirements governing submittal procedure. Additional submittal requirements pertaining to this SECTION are specified herein under this Article.

C. Certificates
   1. Certificate: Submit manufacturer's data report, Form U-1.

D. Guarantee
   1. Guarantee the unit to meet the operating conditions, capacity and performance conditions as specified and to remain serviceable for the following specified period. If either the unit or accessories fail to meet operating requirements or if failure of any part occurs during the guarantee period, rework or replace the affected items promptly to meet the CONTRACT requirements at no cost to the OWNER.
   2. The OWNER reserves the option to request a performance test throughout the warranty period.
   3. Based on no performance test, warranty shall extend for two years from date of initial operation. If a performance test is made and the machine meets its guaranty, the warranty shall be as above. If unit fails to meet is guaranteed performance, then warranty shall extend twenty-four months from date of acceptance of modified unit.

1.4 PRODUCT DELIVERY, STORAGE AND HANDLING

A. Inspection
   1. The OWNER'S REPRESENTATIVE shall be granted the right to inspect at the factory, upon any occasion during the manufacture and assembly, air receiver covered by this CONTRACT and to be present during any tests made upon the air receiver. Provide the OWNER with a written notice seven days prior to the scheduled date for conducting all tests required by this SPECIFICATION.
   2. All material and workmanship shall be subject to inspection and test after its delivery to the site. In case any defect is found in material or workmanship or otherwise not in conformity with the SPECIFICATION requirements, OWNER shall have the right to reject such articles or require their correction.
   3. Remove articles requiring correction promptly after notice to do so. If the CONTRACTOR fails to promptly remove such article and proceed promptly with the replacement and/or correction thereof, the OWNER may contract or otherwise replace and/or correct such article and charge to the CONTRACTOR the excess cost incurred by the OWNER.

B. Notification Of Shipment
   1. Upon shipment of equipment, notify, by facsimile or electronic message, the OWNER of said shipment. The following information shall be contained in the message. Shipping date, carrier PRO number, truck number, weight, and item shipped.

C. Shipping
   1. Upon completion, assembly, and testing of the air receiver, provide removable closures for all openings. Unit shall be suitably braced and packed for shipping to prevent damage while in transit.

PART 2 PRODUCTS

2.1 AIR RECEIVER

A. *Compressed Air Receiver [D]*: Designed, constructed and stamped in accordance with ASME Boiler and Pressure Vessel, Code Section VIII, Division 1 for 150 PSIG with inlet, outlet, safety relief valve, pressure indicator and automatic condensate drain valve. Inlet and outlet connections shall be 150 PSIG, flanged per ANSI B16.5. Furnish unit complete with lifting lugs, and vibration isolation supports suitable for suspending receiver on hanger rods.

B. Automatic Condensate Drain:
   1. Pneumatic or electric operated, level actuated automatic condensate drains shall be demand-type, and shall operate without loss of compressed air. Unit shall consist of a reservoir that is drained by a pneumatically or electrically operated stainless steel ball valve or full-port solenoid valve. Body and internals of the trap shall be corrosion-resistant and capable of handling oil-free condensate with a pH of 3, or condensate containing up to 80% oil, without damage. Trap shall be snap-acting, such that the drain valve is either full open or full closed. Operation shall be level activated by a float or a capacitance-type level sensor. Trap shall provide a visible indication of fluid level.
   2. Drains shall be provided with a level switch to alarm on high level, having all stainless steel wetted parts.
   3. Manufacturers:
      a. Atlas Copco, EWD 330
      b. Air Systems Products, “Accu-Drain.”
      c. Beko Condensate Systems, Model “Bekomat CO.”
      d. Drain-All, Model 1700.
      e. Zeks Air Drier Corp. Model SDA-150.

C. Safety Relief Valves:
   1. Safety Relief Valves: Spring loaded, ferrous body, stainless steel trim and lifting levers per ASME Boiler and Pressure Vessel Code, Section VIII.
      a. Consolidated Div., Dresser Industries, Type 1902.
      b. Lonergan Series 43-H-200.
      c. Farris.

D. Painting:
   1. Surface preparation to SSPC SP-3. Epoxy coating for interior, applied per coating manufacturer’s instructions. Exterior prime and finish coating shall be manufacturer’s standard.

PART 3 EXECUTION

(NOT USED)

END OF SECTION

Revision History	
Date	**Rev. No.**
E	0
F	0
02-19-09	0

LMS/djo
Y:\d\timsdatasf\BROOKHAVEN_NATIONAL_LABORATORY\SF070003\200-PROJEXEC\280-SPEC\15218.doc

SECTION 15300

FIRE PROTECTION SYSTEM

PART 1 GENERAL

1.1 SUMMARY

A. Scope
   1. Provide the fire protection system as shown or specified, complete with all accessories for a complete functioning system to meet the Building Code State of New York, Department of Energy (DOE), FM Global Property Loss Prevention Data Sheets, and NFPA requirements.

B. Description Of Aboveground Systems And Equipment
   1. WET PIPE SYSTEM
      a. Piping;
         1) TYPE BCS-FP (STD), BLACK CARBON STEEL - FIRE PROTECTION.
         2) Piping below bottom chord of truss shall be TYPE BCS-FP (STD), BLACK CARBON STEEL.
      b. Valves: Special Service - Fire Protection Valves.

C. Related Work Specified Under Other SECTIONS
   1. Division 15 Section – General Mechanical Requirements.
   2. Division 16 Section - Electrical Work.
   3. Division 16 Section - Fire Alarm Systems.

1.2 DEFINITIONS

A. AHJ: Federal, State, or Local Authority having jurisdiction responsible for approving equipment, materials, installation, or procedure.

B. AISI – American Iron and Steel Institute.

C. ANSI/HI: American National Standards Institute and Hydraulic Institute.

D. ANSI/ASME B31.1 - Power Piping.

E. ANSI/ASME SEC 9 - Welded and Brazing Qualifications.

F. ANSI/AWS D1.1 - Structural Welding Code.

G. ANSI/NFPA 12 - Carbon Dioxide Extinguishing Systems.

H. ANSI/NFPA 72 - Fire Alarm Code.

I. ANSI/NFPA 70 - National Electric Code.

J. ASME – American Society of Mechanical Engineers.

K. AWS – American Welding Society.

L. DOE – Department of Energy.

M. FM - Factory Mutual Global.

N. UL – Underwriter's Laboratories.

O. NFPA – National Fire Protection Association. Current version unless mandated by local authority having jurisdiction.

P. NEC – National Electrical Code.

Q. Hose Connection: Valve with threaded outlet matching fire hose coupling thread for attaching fire hose.

R. Working Plans: Documents, including drawings, calculations, and material specifications prepared according to NFPA 13 and NFPA 14 for obtaining approval from OWNERS Underwriter and authorities having jurisdiction.

S. Fishmouth Connection: Branch pipe end shaped to fit run pipe cross-section.

1.3 QUALITY ASSURANCE

A. Requirements of Regulatory Agencies: Provide fire protection work per the mandatory code requirements, standards of NFPA, and the requirements of the OWNERS Underwriter, except where more stringent requirements are indicated, as modified and supplemented by the CONTRACT DOCUMENTS.
   1. The NFPA requirements include the appendices and supplements.
   2. The provisions and recommendations of the NFPA constitute mandatory minimum requirements for work specified herein. No payment will be made by OWNER for extra charges for work added in order to comply with NFPA Standards and OWNER'S Underwriter requirements.

B. Installer Qualifications: An installer with at least three-years experience, is licensed where required by authorities having jurisdiction, and who has designed and installed fire-protection piping similar to that indicated for this Project and obtained design approval and inspection approval from OWNERS Underwriter and authorities having jurisdiction.

C. Engineering Responsibility: Preparation of working plans, calculations, and field test reports by a qualified professional engineer or NICET Level 3 or 4 Designer. Base calculations on results of fire-hydrant flow test.

D. Design Engineer Qualifications: A professional engineer or NICET Level 3 designer who is legally qualified to practice in jurisdiction where Project is located and who is experienced in providing engineering services of the kind indicated. Engineering services are defined as those performed for installations of fire-protection piping that are similar to those indicated for this Project in material, design, and extent.

E. Manufacturer Qualifications: Firms whose equipment, specialties, and accessories are listed by product name and manufacturer in UL's "Fire Protection Equipment Directory" and FM's "Fire Protection Approval Guide" and that comply with other requirements indicated.

F. Contractor Qualifications: Fire protection system work shall be supervised and performed by personnel regularly engaged in the installation of fire protection systems per Underwriter's and NFPA Standards.
   1. Where allowed, employ for welding, brazing, soldering and cutting work, "qualified" personnel, as defined by applicable code and certified by the National Weld Test Bureau, the Hartford Steam Boiler and Inspection Company, or other approved bureau or agency.

G. Standpipe and Sprinkler Components: Listing/approval stamp, label, or other marking by a testing agency acceptable to authorities having jurisdiction.

H. Electrical Components, Devices, and Accessories: Listed and labeled as defined in NFPA 70, Article 100, by a testing agency acceptable to authorities having jurisdiction.

I. NFPA Standards: Equipment, specialties, accessories, installation, and testing complying with the following:
   1. NFPA 10, "Portable Fire Extinguishers."
   2. NFPA 13, "Installation of Sprinkler Systems."
   3. NFPA 14, "Standpipe and Hose Systems."

J. Hydraulic Design Criteria: Design sprinkler piping according to the following and obtain approval from authorities having jurisdiction:
   1. Base design on hydraulic calculations.
   2. Include hose stream allowance. Add two hose streams at their point of connection to the overhead sprinkler system, 50 gpm each, and 150 gpm at the base of the automatic sprinkler riser.
   3. Include losses through water-service piping, valves, and backflow preventers.
   4. Use 165 deg F rated heads on all sprinkler systems, except in areas where the ambient temperature exceeds 110 deg F. Sprinkler ratings for areas exceeding 110 deg F shall be ambient plus 50 deg F.

K. Piping, Components, and Installation: Capable of producing piping systems with 175-psig minimum working-pressure rating, unless otherwise indicated.

1.4 SUBMITTALS

A. Furnish submittals for items that are identified in this SECTION by a different typeface and a bracketed code (e.g., *Item [L]*). Refer to DIVISION 1 SECTION for definition of codes for

types of submittals and the administrative requirements governing submittal procedure. Additional submittal requirements pertaining to this SECTION are specified herein under this Article.

B. Working plans:
   1. Working plans shall be submitted for approval to the authority having jurisdiction before any equipment is installed or remodeled. Deviation from approved plans shall require permission of the authority having jurisdiction.
   2. Working plans shall be drawn to an indicated scale, on sheets of uniform size, with a plan of each floor, and shall show items from the following list that pertain to the design of the system.
   3. Where the equipment is to be installed as an addition to an existing system, indicate enough of the existing system on the plans to make all conditions clear.
   4. The working plan submittal shall include the manufacturer's installation instructions for any specially listed equipment, including descriptions, applications, and limitations for any sprinklers, services, piping, or fittings.
      a. OWNER'S name, street address, city, and state.
      b. The bay/column location and building number where the installation is proposed.
      c. The scale used on all plans.
      d. Name and address of contractor.
      e. Full height cross section (scaled), or schematic diagram, including details of structural member and ceiling construction. Indicate the type of construction (obstructed or unobstructed) per the definitions in NFPA 13.
      f. Details of lights, HVAC ducts, and other non-structural obstructions to the proposed sprinklers.
      g. Locations of full height walls.
      h. Occupancy class of each room/area.
      i. Location and size of concealed spaces. Include construction and occupancy details.
      j. Any small enclosures/areas where no sprinklers are omitted.
      k. Make, type, model, and nominal K-factor of sprinklers and manufacturers cut sheet(s).
      l. Temperature rating and location of all sprinklers.
      m. Total area protected by each system riser on each floor.
      n. Pipe type and schedule of wall thickness.
      o. Nominal pipe size and cutting lengths of pipe (or center-to-center dimensions). Where typical branch lines prevail, it shall be necessary to size only one typical line.
      p. Location and size of riser nipples.
      q. Type of fittings and joints. Location of all welds and bends. The contractor shall specify on drawing any sections to be shop welded and the type of fittings or formations to be used.
      r. Type and location of hangers, sleeves, braces, and methods of securing sprinklers.
      s. Make, type, model, and size of all control valves, alarm valves, dry pipe valves, preaction valves, deluge valves, check valves, etc. Also include size of drain pipes, and test connections.
      t. Size and location of risers, hose outlets, and related equipment.
      u. For hydraulically designed systems, provide hydraulic data nameplate.

v. Show hydraulic reference points on the plan that correspond with comparable reference points on the detailed hydraulic calculation sheets.
w. Detailed Hydraulic Calculation Forms per section 8-3 of NFPA 13. Also include the minimum rate of water application (density), the design area of water application, in-rack sprinkler demand, and the water required for hose streams both inside and outside calculated to the Base of Riser and back to the available water supplies. Elevations Above Finished Floor of sprinklers, junction points and supply or reference points should be included.
x. The location and proof of the hydraulically most remote area (using the rectangular area having a dimension parallel to the branch lines equal to or greater than 1.4 times the square root of the area of operation).
y. Calculation of loads for sizing and details of sway bracing for Earthquake prone areas.

C. Field Test Reports and Certificates: Indicate and interpret test results for compliance with performance requirements and as described in NFPA 13 and NFPA 14. Include "Contractor's Material and Test Certificate for Aboveground Piping" and "Contractor's Material and Test Certificate for Underground Piping."

D. Maintenance Data and Hydraulic Placard: For each sprinkler system to include in maintenance manuals specified in Division 1.

1.5 RECORD DOCUMENTS

A. Submit as-built drawings and progress prints per DIVISION 1 SECTION.

1.6 OPERATION AND MAINTENANCE DATA

A. Furnish per DIVISION 1 SECTION, operating and maintenance data, special tools, and spare parts list.

B. Include permanent type hydraulic placards, nameplates and instruction plates to identify the system and instruct in its use under emergency conditions.

C. Spares for each type of sprinkler head complete with cabinet and wrench per NFPA No. 13.

1.7 PROJECT CONDITIONS

A. Hazardous Areas
1. Ground piping and equipment in hazardous areas as specified in the DIVISION 16 SECTION.
2. Provide electrically operated equipment suitable for NEC 500 Class I, Division I, Group D Series.

PART 2 PRODUCTS

2.1 ABOVEGROUND PIPING MATERIALS

A. Type BCS-FP (STD.), Black Carbon Steel -Fire Protection

1. Pipe:
   8 and under — Schedule 40 black carbon steel; ASTM A 53, Type E
2. Pipe:
   10 and larger — Schedule 30 black carbon steel; ASTM A 53, Type E or S, Grade B.
3. Couplings:
   All sizes — Extra heavy screwed black carbon steel ASTM A-53.
4. Unions:
   1/8 thru 2 — 300 PSI WSP female screwed malleable iron with ground joint and brass to iron seat.
5. Nipples:
   1/8 thru 2 — Schedule 80 black carbon steel, ASTM A 53.
6. Flanges:
   2-1/2 and up — 175 PSI WOG minimum, cast iron screwed; ASTM A 126, Class B and ANSI B16.1, UL/FM Listed.
7. Fittings: — 175 PSI WOG minimum, cast iron screwed; ASTM A 126, Class B and ANSI B16.4 or flanged; ANSI B16.1, UL/FM Listed.
8. Cut and roll grooved couplings and fittings:
   All sizes — UL/FM Listed, malleable iron, elastomer gasket.
   a. Anvil International
   b. Victaulic
9. Welding fittings:
   4 and up — Steel buttweld; ASTM A 234 and ANSI B16.9 to match pipe wall thickness.
10. Flanges:
    2-1/2 and up — 150 PSI WSP steel; ANSI B16.5 and ASTM A 181, Grade 1 or 2 to match pipe wall thickness.

2.2 PIPING SPECIALTIES

A. Backflow Preventer

1. *Reduced pressure backflow-prevention device [D]*: UL Listed reduced-pressure-type per AWWA C-506, New York State approved for toxic chemicals.
   a. Hersey Products Inc. - AERGAP BEECO Model 6 CM.
   b. Cla-Val Co. “RP Series”.
   c. Febco Model 825.

2.3 ABOVEGROUND VALVES

A. General
   1. Refer to NFPA 13.
   2. Use UL Listed/FM Listed valves.
   3. For overhead, inaccessible, exposed valves, equip with chain wheel and chains of sufficient length to allow operation from the floor.
   4. Valves shall be locked open with chains and locks. Locks to be keyed alike to match site requirements.

B. Description
   1. Ball valves: 2 inches and under.
      a. Jamesbury “Type A-11-TT-22”.
      b. Rockwood “Style M101”.
      c. Worcester “Style 44”.
      d. Grinnell
   2. Gate valves: 2 inches and under.
      a. Crane “No. 459”.
      b. Stockham “B-133”.
      c. Kennedy Valve Div. of MCWANE Inc.
      d. NIBCO “T-104-0”.
      e. Grinnell “No. 66”.
   3. Globe valves: 2 inches and under.
      a. Crane “No. 7”.
      b. Stockham “B-22”.
      c. Grinnell “No. 3240”
   4. Check valves: 2 inches and under.
      a. Crane “No. 34”.
      b. Stockham “B-319”.
      c. Grinnell “No. 3310”.
   5. Gate valves: 2-1/2 inches and larger.
      a. Crane “No. 467”.
      b. Stockham “G-634”.
      c. Kennedy Valve Div. of MCWANE Inc.
      d. NIBCO “T-104-0”.
      e. Mueller, Div. of Grinnell “No. A2079-6”.
   6. Check valves: Rubber faced checks 2-1/2 inches and larger.
      a. Crane No. 375.
      b. Stockham “No. G-940”.
      c. Kennedy Valve Div. of MCWANE Inc. No. 126A.
      d. NIBCO No. F-908-W.
      e. Mueller, Div. of Grinnell No. A2122-6

2.4 SPRINKLER SYSTEM COMPONENTS

A. Sprinkler Heads
   1. *Upright or pendent type [P]*: In all unfinished areas; as required.
      a. Star Sprinkler, Tyco Fire Products, Model SG.
      b. Grinnell, Tyco Fire Products, Model "A".
      c. Reliable Model F1.
      d. Viking Micromatic Model M
      e. Central, Tyco Fire Products, Model GB Series.
   2. Pendent type, chrome plated brass heads: In finished areas below suspended ceilings. Furnish escutcheon plate with baked enamel finish to match ceiling.
      a. Grinnell, Tyco Fire Products, "Model F972".
      b. Viking Micromatic Model M/Model E-1 Escutcheon.
      c. Star Sprinkler, Tyco Fire Products, Model SG
      d. Reliable Model F1.
      e. Central, Tyco Fire Products, Model GB Series.
   3. Temperature rating of heads shall be ordinary temperature, 155 to 165 degF temperature ratings except shall be 50 degF above ambient for temperatures exceeding 100 degF.
   4. Sprinkler head guards: Furnish where damage to sprinkler heads may occur, such as stairways, loading docks or aisles with lift truck operations.

B. Pressure Gauges (Water)
   1. Bronze Bourdon tube: 0-200 PSI range, 3-1/2 inch dial.
      a. Ashcroft Duragauge Model 1005, XUL.
      b. Brecco Corp. Model W-101.
      c. US Gauge Div. Amtek Inc. P-1590.

C. Sprinkler System Control Valves
   1. Wet pipe alarm check valve: Flanged or grooved end inlet and outlet complete with standard accessories and trim including pressure gages, necessary intercomponent piping, fittings and valves.
      a. Grinnell, Tyco Fire Products, Model F200 (Flanged) or F2001 (Flange x Groove) or F20 (Groove x Groove).
      b. Star Sprinkler, Tyco Fire Products, Model E 5900 Series.
      c. Viking Corp. Model H-2.
      d. Reliable Model E.
      e. Central, Tyco Fire Products, Model F.

2.5 ALARM DEVICES

A. Flow Alarm, Vane type: With 2 SPDT contacts which will energize alarm circuit on deflection by flowing water that equals or exceeds the capacity of a single sprinkler head.
   1. Central Sprinkler, Tyco Fire Products, Model VSR-F.
   2. Grinnell, Tyco Fire Products, Model VSR-F.
   3. Potter Electric Signal Co. Model VSR-F.
   4. Reliable Model A.

5. Viking Corp. Model VSR-F.

B. Valve supervisory switch: Unit shall contain one or two single pole, double throw switches, mounting hardware, and accessories necessary to monitor unauthorized closing of water supply to automatic sprinkler system, by actuating a remote signaling device when the water supply valve is turned from the full open position.
   1. Central Sprinkler, Tyco Fire Products.
   2. Grinnell, Tyco Fire Products, Model OSYSU-A2.
   3. Guardian Fire Equip. Co. Model No. 7247.
   4. Potter Electric Signal Co. Model OSYSU-A2.
   5. Potter Roemer Figure 6220.

C. Electric alarm gong: Assembly shall include an U.L. Listed gong with non-staining, weather resistant mounting. Wiring will be provided as part of WORK under DIVISION 16 SECTIONS.
   1. Grinnell, Tyco Fire Products, Model PBA-AC or PBD-DC
   2. Guardian Fire Equip. Co. Model No. 7276.
   3. Potter Electric Signal Co. Model PSB.
   4. Star Sprinkler, Tyco Fire Products.

2.6 FIRE HOSE VALVE

A. Siamese Wall Exposed Type: Cast brass, wall mounted, "Y" type with rough finish, two 2-1/2 inch fire department inlets, double clapper check valves, lug caps and chains and cast-in function lettering. Hose connections shall be compatible with local fire department connections.
   1. Manufacturer:
      a. Badger Powhatan Model No. 21-203.
      b. Croker Div. Fire End and Croker Corp. 6430.
      c. Elkhart Brass Mfg. Co. Inc. No. 156.
      d. Guardian Fire Equipment Co. Model 203.
      e. Potter-Roemer Model 5750.

B. Hose Valve: 2 ½" Angle type, male outlet connection cast brass valve with red hand wheel, with 1½" hose adapter with cap and chain.
   1. Badger Powhatan Model No. 18.157.
   2. Croker Div. Fire End and Croker Corp. 5015.
   3. Guardian Fire Equipment Co. Model 157-U.
   4. Potter-Roemer Model 4065.

2.7 PORTABLE FIRE EXTINGUISHERS (FE-1)

A. Portable Fire Extinguishers (FE-1)
   1. *Pressurized ABC multi-purpose dry chemical [P]*: Red enamel steel tank, 10 pound capacity, ammonium phosphate base, with self-closing hand valve, discharge hose, pressure gauge, and wall mounting bracket where indicated. UL rating 4A:60 B:C for Class A, B, and C fires.
      a. Amerex Model 441.

B. Portable Fire Extinguishers (FE-2)

C. *Pressurized CO_2 [P]*: Red enamel steel tank, 15 pound capacity, with self-closing hand valve, discharge hose, pressure gauge, and wall mounting bracket where indicated. UL rating 10 B:C for Class B, and C fires.
   1. Amerex Model 331.

2.8 ELECTRICAL WIRING

A. Electrical wiring: Install or reconnect load side wiring disconnected for shipment; for replacement or additional wiring required, provide as part of the WORK of this SECTION per applicable requirements of DIVISION 16 SECTIONS.

2.9 SUPPORTING ELEMENTS

A. Supporting elements: Provide UL/FM components per NFPA 13, ANSI B 31.1 and MSS SP-58 and SP-69 except that "C" clamps or any modification thereof are unacceptable.

B. Furnish necessary piping and equipment supporting elements including; building structure attachments; supplementary steel; hanger rods, stanchions and fixtures; vertical pipe attachments; horizontal pipe attachments; anchors; guides.

C. All hanger rods shall connect to approved "I" beam or channel clamps, concrete inserts or expansion shields. Provide all concrete inserts and structural members required for the proper support of fire protection piping. "C" clamps with or without retainer straps may not be used on piping 3" and larger. Top C-clamps with retaining straps (as specified) may be used on pipe sizes up to and including 2-1/2" nominal diameter; install lock nut on hanger rod above retaining strap.

D. "C" clamps without retaining straps are not permitted.

Pipe Size	Manufacturer	Model No.
Clevis Hangers		
Up to & incl. 4" diameter	Anvil International	65
Up to & incl. 8" diameter	Anvil International	260
	B-Line	B3100
	M-Co.	400
	Witch	100
Adjustable Swivel Rings		
Up to & incl. 8" diameter	Anvil International	69
	B-Line	B317ONF
	M-Co.	100
	Witch	800

Beam Clamps

Up to & incl. 8” diameter	Anvil International	218 with extension piece No. 157
		B-Line B3054
Up to & incl. 12” diameter	Anvil International	134
		B-Line B3050

Top C-Clamps with Retaining Straps

Up to & incl. 2-1/2” diameter	Anvil International	92 or 93 with retaining strap equal to or greater than B-Line B3367.
	B-Line	B3033 or B3034 with B3367.
Up to & incl. 2-1/2” diameter	M-Co.	300 or 310 with 301 retaining strap.
		Witch 192 with retaining strap.
		Persing 35, 36 or 37 with 1/8” thick # 35RS retaining strap.

1. Hangers for overhead piping shall comply with NFPA 13 Standard as to size, load capacity and spacing. Special supports and hangers shall meet with the approval of the OWNER’S REPRESENTATIVES.
2. Suspension from roof deck will not be permitted.
3. Vertical piping supports within the column web shall consist of a strut with mechanical type fastening to the column flanges, and pipe clamp attached to the strut. Pipe clamps shall be U.L. labeled, FM approved. Minimum strut section modulus shall be equal to or greater than that listed in NFPA 13 for trapeze hangers.
   a. Pipe clamp shall be B-Line Systems, Inc. B2400 Series or equal by Grinnell.
   b. Strut column support shall be B-Line Systems, Inc. Model No. B613A or equal by Grinnell.

2.10 MISCELLANEOUS MATERIALS

A. Painting:
   1. Refer to DIVISION 9 SECTION for requirements.

B. System Identification:
   1. Refer to DIVISION 15 SECTION for requirements.

C. *Fireproof Wall and Floor Sleeves [P]*:
   1. Aboveground sleeves:
      a. Provide standard weight black carbon steel pipe sleeves where piping passes through roofs, floors and concrete or masonry walls. Location of sleeves shall be coordinated with other DIVISIONS for incorporation into the WORK as construction progresses.
      b. Provide cast-in-place sleeves, fabricated from pipe with welded anchor lugs.
      c. Sleeves through steel decks shall be welded with a continuous weld to the deck.
      d. Where sleeves are placed in existing concrete or masonry, use pipe size core drills and secure sleeve watertight with EPOXY BONDING COMPOUND. Do not load sleeves without approval of OWNER'S REPRESENTATIVE.
      e. Set sleeves flush with walls, under sides of suspended slabs and top surface of floors in finished spaces. Set sleeves flush with walls and 2 inches above finished floor in manufacturing and equipment room spaces, unless otherwise indicated. Set sleeves a minimum of 9 inches and a maximum of 12 inches above finished roof.
      f. Refer to DIVISION 7 SECTION for requirements, packing and sealing of space between the piping and the inside of sleeve.
   2. Below grade sleeves:
      a. Provide below grade wall sleeve and modular floor and wall seal to assure protection against the penetration of flames, smoke, gases, and water for three hours.
      b. Sleeve shall be manufactured from heavy wall welded or seamless steel pipe with full circle, continuously welded water stop plate, to assure positive water sealing on the O.D. of the sleeve and no thrust movement. Sleeve shall be finished with enriched red primer to assure metal surface protection.
         1) Thunderline "Link-Seal" Wall Sleeves.
      c. Modular floor and wall seal shall be constructed of inorganic materials to provide protection against the penetration of flames, smoke, gases, water and temperatures in excess of 1900 degF for three hours. Sealing elements shall be fire resistant silicone rubber with steel pressure plates and shall meet ASTM Standard E-119-76.
         1) Thunderline "Link-Seal, Pyro-Pac".

D. Escutcheons:
   1. Nonferrous, chrome plated, except if fabricated from AISI 300 Series Stainless Steel, one-piece or split pattern type shall maintain fixed position against a surface by internal spring tension or set screws.

E. Flashing: Refer to DIVISION 7 SECTION for requirements.

F. Epoxy Bonding Compound: Refer to DIVISION 7 SECTION for requirements.

G. *Bituminous Coating [P]*: Refer to DIVISION 7 SECTION for requirements.

H. Splash Blocks:
   1. Precast concrete splash blocks.

PART 3 EXECUTION

3.1 ABOVEGROUND PIPING INSTALLATION

A. Fabrication, Assembly, Erection
   1. Install piping per NFPA 13, OWNER'S Underwriters and governmental authorities having jurisdiction.
   2. Clean pipe, tubing, fittings, valves, equipment and accessories of extraneous foreign material and dry the components before installation into their respective systems. During construction, protect open ends of pipe, fittings and valves to prevent the admission of foreign matter. Place plugs in the ends of installed work at the end of the day and whenever work stops. Use commercially manufactured plugs. Fabricate pipe to measurements established on the project site; work pipe into place without springing or forcing. Provide for absorbing movement without undue stress in any part of the system.
   3. Install piping straight and true, with approved offsets to increase headroom and avoid obstructions. Provide specified drainage and venting where piping offsets are required.
   4. Use standard pipe fittings for changes in direction. No mitered joints or field fabricated pipe bends will be permitted. Short radius elbows may be used where specified or specifically authorized by the OWNER'S REPRESENTATIVE. Copper tubing may be bent in the field with the use of approved tube bending equipment.
   5. Make tee connections with screwed tee fittings or specified welded connections. Make welded branch connections with either welding tees or forged branch outlet fittings per ASTM A 234, ANSI B16.9 and ANSI B16.11. For forged branch outlets, furnish forged fittings flared for improved flow where attached to the run, reinforced against external strains and to full pipe-bursting strength requirements. "Fishmouth connections" are not acceptable.
   6. Provide unions, grooved couplings, or bolted flanges to permit removal of equipment, valves and piping accessories from the piping system. Make final connections to equipment with unions or flanges located between equipment and valves.

B. Joints
   1. Ream pipe ends. Make up screwed joints with joint compound. Apply joint compound to the male thread only; prevent compound from reaching the interior of the pipe. Provide leak-tight joints without stressing fittings.
   2. Make up screwed joints with Teflon tape per manufacturer's instructions.
   3. Hot work permit shall be approved by the site Security before any hot work is started. Perform field welding and cutting in approved areas per referenced codes and standards. Provide welded joints utilizing chill rings in black carbon steel piping systems sized 2-1/2 inch and larger, except where consumable insert rings, flanges and unions are specified or

indicated. The CONTRACTOR may use socket or butt welded joints in lieu of screwed joints, sizes 2 inches and under.

4. Assemble flanged joints with fresh-stock gasket and hex head nuts, bolts or studs. Make clearance between flange faces such that the connections can be gasketed and bolted tight without strain on the piping system. Align flange faces parallel and bores concentric; center gaskets on the flange faces without projection into the bore.
5. Lubricate bolts with oil and graphite before assembly to insure uniform bolt stressing. Draw up and tighten bolts in staggered sequence to prevent unequal gasket compression and deformation of the flanges. Do not mate a flange with a raised face to a companion flange with a flat face; machine the raised face down to a smooth matching surface and use a standard ring gasket. After the piping system has been tested and is in service at its maximum temperature, check bolting torque to provide required gasket stress.
6. Silicone components are not allowed.

C. Joints Of Dissimilar Metals

1. At connections between piping systems, hangers and equipment of dissimilar metals, insulate, using dielectric insulating material, nonferrous piping against direct contact with the building steel by insulating the contact point of the hanger and pipe or the hanger and building steel. Test each point of dielectric insulation with an ohmmeter to insure proper isolation of dissimilar materials. Test shall be observed by the OWNER'S REPRESENTATIVE.

D. Grooved Couplings And Fittings

1. Grooved pipe couplings and fittings shall be as specified and indicated. Select manufacturer's recommended gaskets for the piping contents.

3.2 SPRINKLER HEADS

A. Space heads per lighting, building equipment layout and NFPA 13. Because the sprinkler heads may be installed before the lighting, ducts, piping and equipment are installed, locate heads referring to CONTRACT DRAWINGS to prevent conflicts. Equipment location shall have priority over sprinkler head and piping location. No sprinkler pipe shall pass through air ducts.

B. Aesthetically locate sprinkler heads in finished administrative function spaces with respect to ceiling patterns, tile patterns, masonry bonds and similar construction lines. Locate sprinklers on center of tile or quarter point of ceiling tile.

C. Upon completion of installation and prior to any painting work, protect heads with rubber band secured plastic or paper bags. Removal of bags is specified as part of work of Division 09 Section "PAINTING."

3.3 BUILDING SURFACE PENETRATION SLEEVES AND CALKING

A. Sleeves are required where piping passes through roofs, floors and concrete or masonry walls. Provide sleeves required for this WORK in cooperation with the work provided under other DIVISIONS for incorporation into the WORK as construction progresses.

B. Provide cast-in-place sleeves, fabricated from pipe with welded anchor lugs.

C. Sleeves through steel decks shall be welded with a continuous weld to the deck.

D. Where sleeves are placed in existing concrete or masonry, use pipe size core drills and secure sleeves watertight with EPOXY BONDING COMPOUND. Do not load sleeves without approval of OWNER'S REPRESENTATIVE.

E. Set sleeves flush with walls, under sides of suspended slabs and top surface of floors in finished spaces. Set sleeves flush with walls and 2 inches above finished floor in manufacturing and equipment room spaces, unless otherwise indicated. Set sleeves a minimum of 9 inches and a maximum of 12 inches above finished roof.

F. Pack space between bare or insulated pipe and the inside of sleeve with mineral wool or fibrous glass. Where vapor barrier is required, add 3/8 inch deep calking on both sides of packing.

G. Seal piping passing through aboveground sleeves weathertight with packing and calking. Calk expandable inserts exposed to weather.

H. With OWNER'S REPRESENTATIVE'S approval, silicone foam may be used in lieu of the foregoing for interior applications.

3.4 ESCUTCHEONS

A. Provide escutcheons at all surface penetrations of piping into finished areas. Where finished areas are separated by partitions through which the piping passes, provide escutcheons on both sides of the partition. Where suspended ceilings are installed, provide escutcheons at the underside only.

3.5 FLASHING AND COUNTERFLASHING

A. Provide flashing and counterflashing to maintain building weathertightness.

3.6 PAINTING

A. Refer to DIVISION 9 SECTION "Painting."

3.7 SYSTEM IDENTIFICATION

A. Refer to DIVISION 15 SECTION "General Mechanical Requirements."

3.8 FIELD QUALITY CONTROL

A. General
   1. Test equipment per the manufacturer's published instructions, NFPA and as specified for the system.

B. Piping Systems Testing

1. Test piping systems per NFPA 13 and 14, applicable governing codes, such as State, local or insurance codes, and the requirements of OWNER'S insuring agency.
2. Provide the necessary equipment and materials and make necessary test connections required to properly execute tests. Tests shall be witnessed by OWNER'S REPRESENTATIVE and authorized inspectors (or representatives) having jurisdiction, who shall be timely notified by the CONTRACTOR to insure their being present during the testing.
3. Perform tests before piping is painted or concealed. Immediately correct defects discovered during the tests and retest the systems to the complete satisfaction of the OWNER'S REPRESENTATIVE and the inspectors (or representatives) authorized to approve the piping installation. Correct any piping system, or any portion thereof, which does not conform to the best current installation practices of the trade. Such corrections shall be at no additional cost to the OWNER.

3.9 FLUSHING AND DISINFECTING

A. Disinfect piping if required to comply with applicable codes.

B. Flush piping per NFPA 13 at a velocity of not less than 10 FPS.

C. Provide additional system controlled or uncontrolled openings necessary to achieve specified velocity.

D. If sufficiently high velocities cannot be practically obtained, "lance" piping prior to flushing with high pressure water or oil-free compressed air jets.

E. Submit for approval proposed means of disposing of flushing water.

3.10 COMMISSIONING

A. Verify that specialty valves, trim, fittings, controls, and accessories are installed and operate correctly.

B. Verify that specified tests of piping are complete.

C. Verify that damaged sprinklers and sprinklers with paint or coating not specified are replaced with new, correct type.

D. Verify that sprinklers are correct types, have correct finishes and temperature ratings, and have guards as required for each application.

E. Verify that potable-water supplies have correct types of backflow preventers.

F. Verify that hose connections and fire department connections have threads compatible with local fire department equipment.

G. Fill wet-pipe sprinkler piping with water.

H. Energize circuits to electrical equipment and devices.

I. Adjust operating controls and pressure settings.

J. Coordinate with fire alarm tests. Operate as required.

3.11 DEMONSTRATION

A. Demonstrate equipment, specialties, and accessories. Review operating and maintenance information.

B. Schedule demonstration with OWNER, OWNERS Underwriter, and authorities having jurisdiction with at least seven days' advance notice.

END OF SECTION

Revision History	
Date	**Rev. No.**
A	0
B	0
C	0
D	0
E	0
F	0
02-19-09	0

LMS/djo
Y:\d\timsdatasf\BROOKHAVEN_NATIONAL_LABORATORY\SF070003\200-PROJEXEC\280-SPEC\15300.doc

THIS PAGE INTENTIONALLY LEFT BLANK

SECTION 15400

PLUMBING

PART 1 GENERAL

1.1 SUMMARY

A. Scope
1. Refer to Division 15 Section “General Mechanical Requirements”.
2. Provide all plumbing as shown or specified, including components, accessories and trim for a complete installation.

B. Description Of Systems And Equipment
1. PLUMBING FIXTURES AND TRIM
a. Carriers, supports, fixtures, trim, supplies and drains with connection to rough-in work for supplies and drainage.
2. DRAINAGE SPECIALTIES
a. Roof drains, floor drains, cleanouts and P-traps.
3. PLUMBING EQUIPMENT
a. Water coolers, water heaters, hose bibbs, wall hydrants and backflow preventers with hangers or supports and connections to rough-in work for supplies, drainage and vent as required for equipment use.

C. Related Work Specified Under Other Sections
1. Division 15 Section “General Mechanical Requirements.”
2. Division 15 Section “Underground Piping Systems.”
3. Division 15 Section “Aboveground Piping Systems.”
4. Division 15 Section “Valves.”
5. Division 15 Section “Piping Specialties.”
6. Division 15 Section “Pumping Equipment.”
7. Division 15 Section “Thermal Insulation.”

1.2 QUALITY ASSURANCE

A. Requirements Of Regulatory Agencies
1. Provide plumbing work per (International Plumbing Code)(BOCA Basic Plumbing Code)(Verify code used for each project), except where superseded by State or Local authorities.

1.3 SUBMITTALS

A. Furnish submittals for items that are identified in this SECTION by a different typeface and a bracketed code (e.g., *Item [L]*). Refer to Division 01 Section “Shop Drawings, Product Data and Samples,” and Division 15 Section “General Mechanical Requirements” for definition of codes for types of submittals and the administrative requirements governing submittal

procedure. Additional submittal requirements pertaining to this SECTION are specified herein under this Article.

B. Certificate: Submit Manufacturer's Data Form U-1 for water cooler storage tank.

PART 2 PRODUCTS

2.1 PLUMBING FIXTURES AND TRIM

A. General
1. Provide fixtures with trim necessary for a complete assembly and functioning installation, including supplies, risers, stops, drains, escutcheons, couplings, gaskets, nuts, fasteners, seats and fittings.
2. Provide fixtures basically selected from a single manufacturing source and of like quality and material.
3. Provide rough-in per manufacturers published instructions.
4. For exposed to view trim, including surface penetration escutcheons, support escutcheons and fasteners, furnish chromium-plated or nickel-plated brass with polished, bright surfaces, normally referred to as "chrome-plated".
5. All plumbing fixtures in barrier free environment shall be in compliance with ADA. Where lavatories are indicated with the symbol (HCP), furnish unit complete with thermostatic tempering valve in faucet supply piping, and cover hot water and drain piping with a molded closed cell vinyl insulation from lavatory to wall.
6. Vitreous china fixtures shall be color as selected by the ARCHITECT from the manufacturer's standard color schedule, except where otherwise specifically noted.

B. Fixture Supports
1. Ferrous metal carriers: Support wall hung fixtures; furnish and select for the particular installation conditions. Securely bolt carriers to the supporting surface.
2. Enameled iron support: For fixtures specified with support surfaces not concealed by support escutcheons.
3. Concealed adjustable arm carriers: With steel pipe uprights and buttress foot block bases; to support lavatories. Conceal lavatory fixture support arms by means of secure, deep drawn, chrome plated escutcheons.
4. Carriers: With adjustable fittings, drain connections and buttress foot block bases; to support water closets.
5. Carriers: With mounting plates, steel pipe uprights and buttress foot block bases; to support urinals.
6. High extension type carriers: Furnish for water closets and urinals, for the handicapped.
7. Chair carriers: To support medical sinks except as otherwise specified.
   a. Josam.
   b. J. R. Smith.
   c. Wade.
   d. Zurn.

C. Lavatories
   1. TYPE L-1:
      a. Wall hung vitreous china lavatory, wheelchair, nominal 20 x 27 inches with drilled holes on 4 inch centers for gooseneck supply faucet, front overflow, concealed arm support, and integral perforated strainer drain fitting .(ADA Compliant)
         1) American Standard, “Wheelchair” 9141.011.
         2) Crane “Wheelchair” 1H360.
         3) Kohler “Morningside” K-12636.
      b. Faucet:
      c. Supply trim:
      d. Drain trim:
      e. Trap:
   2. TYPE L-2 (HCP)(Countertop):
      a. Countertop vitreous china lavatory, self-rimming oval lavatory, complete with faucet holes on 8 inch centers, fitting ledge, front overflow, nominal 20 x 17 and integral perforated strainer drain fitting. (ADA Compliant)
         1) American Standard, “Aqualyn” 0475.020.
         2) Crane “Sonnet” 1-283-S.
         3) Eljer “Donna” 051-3328.
         4) Kohler “Pennington” K-2196-8.
      b. Faucet:
      c. Supply trim:
      d. Drain trim:
      e. Trap:

D. Lavatory Faucets
   1. TYPE LF-1: Widespread Faucet with drain, grid strainer tailpiece, 8”centers, lever handles, polished chrome.
      a. American Standard4802.00 with #342 handles.
      b. Chicago Faucet 404A-E12 with No. 950 handles and No. 327A drain.
      c. Kohler K-7443-4A with K-7715 drain and K-16012-2 Handles..
   2. *TYPE LF-9 [C]*: Sensor operated 4 inch center-set electronic hand washing faucet, with long grid drain, vandal-proof, 0.5gpm aerated spray head, sensor range adjustment screw, 120 VAC/24 VAC transformer, polished chrome.(ADA Compliant). Where sensor operated faucets are used for (HCP) lavatories, furnish complete with a thermostatic tempering valve option.
      a. Delta “Inovations” Series.
      b. Delany “Sensor-Faucet” Series.
      c. Sloan “Optima” Series.

E. Lavatory Supply Trim
   1. TYPE TTV: Where (HCP) lavatories are indicated, furnish complete with a thermostatic tempering valve having heavy cast bronze body, corrosion resistant internal components, and brass stem with screwdriver adjustment, designed to compensate for temperature fluctuations induced by water temperature and pressure changes in the supply line.
      a. Powers Process Controls, ”Hydroguard”.

b. Conbraco.
c. Lawler Manufacturing Co.
d. Leonard Valve Co.

2. TYPE ST-1: Supply with loose key stops.
   a. American Standard 2303.105.
   b. Chicago Faucet 1016MM.
   c. Elkay LK-2680.
   d. Kohler K-7607 Mod.

F. Lavatory Drain Trim
1. TYPE DT-1: Polished chrome drain with perforated strainer and 1-1/4 inch tailpiece.
   a. American Standard 2411.015.
   b. Chicago Faucet 327A.
   c. Kohler K-7715.
   d. Elkay LK-9
2. TYPE DT-2: Polished chrome offset drain with perforated strainer and 1-1/4 inch tailpiece.
   a. American Standard 7723.018.
   b. Eljer 803-0530.
   c. Kohler K-13885.

G. Lavatory Traps
1. TYPE LT-1: 1-1/4 inch cast brass P-trap with cleanout and waste to wall.
   a. American Standard 4401.014.
   b. Crane 8-5260.
   c. Kohler K-9000.

H. Water Closets
1. TYPE WC-1(HCP): Floor mounted syphon jet elongated type with 1-1/2 inch top spud for exposed flush valve, 1.6 gpf.. Furnish china bolt caps.
   a. American Standard “Madera” 2305.100.
   b. Crane “Whirlton” 3-325.
   c. Kohler “Anglesey” K-4386.
   d. Eljer “Sanus” 111-1115.

I. Seats
1. TYPE WCS-1: White, solid plastic, with extended back, without cover for elongated bowl, with open front and self sustaining hinges.
   a. Kohler, K-4670 SC.
   b. Church 9400KN SSC Series.
   c. Olsonite 10-CC/SS.
   d. Sperzel 50-E.

J. Flush Valves

1. TYPE WV-1: Diaphragm type, top spud, exposed, chrome plated, hand operated, with vacuum breaker, screw driver stop and with wall and spud flanges, 1.6 gallon per flush low consumption, ADA compliant.
   a. Delany “Flushboy” 402-1.
   b. Sloan “Royal” 111.
2. TYPE WV-3: Diaphragm type, top spud, exposed, chrome plated, sensor operated, with vacuum breaker, screw driver stop and with wall and spud flanges, 1.6 gallon per flush low consumption, ADA compliant. Furnish unit complete with 110 to 24 VAC transformer for hard wire installation.
   a. Delta “Teck” 81T201HW.
   b. Delany “Sensor-Flush.”
   c. Sloan “Optima.”

2.2 DRAINAGE SPECIALTIES

A. Floor Drains (FD)

1. Floor drains shall conform to applicable portions of ANSI/ASME A112.6.3. Provide floor drains with: Traps, except where otherwise indicated; running traps below ground floor shall have extension cleanouts on house side; inside caulk outlets on ground floor; threaded or caulk outlets to match piping for suspended slabs; bottom outlets except where otherwise indicated or required; seepage pans and weepholes and clamping collars for slabs with membrane or metal pan waterproofing. BITUMINOUS COATING, factory or field applied to all surfaces before rusting occurs except grate. Provide hopper drains with grates.
2. Provide following types, where indicated. Series numbers given represent basic style only and do not necessarily include required modifications or sizes.
3. TYPE FD-1: Cast iron body, with double drainage flange, weepholes, adjustable 5 inch polished nickel-bronze round strainer, removable sediment bucket, trap seal primer connector.
   a. Josam 30000-5C.
   b. Smith 2000 Series.
   c. Wade W-1100-STD.
   d. Zurn Z-415-5” B.
4. TYPE FD-2: Cast iron body, adjustable top, 8-1/2 inch minimum diameter, heavy deep set grate, removable sediment bucket.
   a. Josam 31600.
   b. Smith 2320.
   c. Wade W-1340-TD.
   d. Zurn Z-520.
5. TYPE FD-3: Cast iron body, removable sediment bucket, minimum 12 inch diameter heavy duty loose set grate.
   a. Josam 36210.
   b. Smith 2140.
   c. Wade W-1200-TD.
   d. Zurn Z-509.

B. Trap Seal Primer Connectors
   1. Fitting for inserting trap primer connection in outlet of conventional floor drain. ½ inch NPT primer inlet tapping; threaded, spigot or No-Hub inlet and outlet.
      a. Smith 2695, 2696 or 2697.
      b. MIFAB MI-600.
      c. Josam Series 88350.
      d. Zurn Z-1023.

2.3 CLEANOUTS (CO)

A. Raised head cleanout plugs: Provide cast brass, except as indicated.

B. Gasketed gas and liquid tight cleanouts: Provide where under pressure or required for space function.

C. Cleanouts and access: Provide in finished spaces as approved by the ARCHITECT-ENGINEER.

D. Seepage flange and weephole: Provide in cleanouts in slabs not on ground floor.

E. Inside caulk outlets: Provide on the ground floor.

F. Seepage flanges, weep holes and flashing clamp: Provide in cleanouts in floors with membrane or metal water proofing.

G. TYPE CO-1: Scoriated bronze alloy cover with cast iron body, threaded bronze plug; secure to plug with countersunk screw.
   1. Josam 56010.
   2. Smith 4023.
   3. Wade 6000.
   4. Zurn Z-1400.

H. TYPE CO-2: Heavy duty scoriated bronze alloy cover with cast iron body, threaded bronze plug; secure to plug with countersunk screw.
   1. Josam 56060.
   2. Smith 4103.
   3. Wade 8000Z.
   4. Zurn Z-1400-HD.

I. TYPE CO-3: Round, coated cast iron access frame with anchor flanges, galvanized cast iron parts, and heavy duty scoriated secured cover with “SAN” wording cast in cover.
   1. Josam 58680.
   2. Wade 8300-MF.
   3. Smith 4250.
   4. Zurn Z-1474.

2.4 P-TRAP

A. Extra heavy cast iron: For connection to type CISP piping.

2.5 HUB OUTLET (HO)

A. Hub: End of TYPE CISP pipe.

2.6 ROOF DRAINS (RD)

A. TYPE RD: Free flow type, heavy pattern cast iron body construction, with clamping surfaces not less than 2 inches wide, dome shaped aluminum strainer approximately 12 inch diameter, deck clamp assembly with weir and gravel stop, and sump receiver. Drain body and bolting shall be corrosion protected with manufacturer's standard enamel and electro-deposited coating.
   1. Josam 21500 Series.
   2. Smith 1010 Series.
   3. Wade W-3000 Series.
   4. Zurn Z-100 Series.

B. TYPE ORD: Overflow type, heavy pattern cast iron body construction, with clamping surfaces not less than 2 inches wide, dome shaped aluminum strainer approximately 12 inch diameter, deck clamp assembly with weir and 2 inch water dam, and sump receiver. Drain body and bolting shall be corrosion protected with manufacturer's standard enamel and electro-deposited coating.
   1. Josam 21500 Series.
   2. Smith 1080 Series.
   3. Wade W-3000-D Series.
   4. Zurn Z-100-89 Series.

2.7 PLUMBING EQUIPMENT

A. Domestic Water Heater (Steam)
   1. *Domestic Water Heater (Steam) [D]*: Packaged, self-contained, horizontal, instantaneous type steam fired water heater, low pressure design for use with 15 psig steam pressure. Unit shall consist of integrally piped ductile iron heat exchanger and copper coil mounted on a heavy duty angle iron frame with assembled control package. Heater shall supply 15 gallons per minute of hot water when heated from 40 °F to 120 °F without the use of thermostatic control devices or storage tanks. Heater shall be capable of maintaining the temperature at ± 3 degrees over a flow range of a few percent to 100 percent. The water shall flow in the tubes and steam in the shell. System shall be equipped with a re-circulation system with non adjustable valve to set the re-circulation temperature. The re-circulation system (except for pump) shall be integrally mounted. Unit shall include control valve, steam/water heat exchanger, trap, and thermostatic air vent.
      a. Leslie, Constantemp, Model E1500L.
      b. Armstrong, Flo-Rite.
      c. Other approved.

B. Emergency Eye Wash

1. *Emergency Eye Wash [D]*: Wall mounted aerated eye wash fountain, stainless steel bowl, wall bracket, chrome plated tail piece, 1/2 inch full-port ball valve with stay-open feature when valve is actuated. Furnish unit with dual spray heads with aerated ABS plastic spray outlets and flip top caps.
   a. Speakman SE-582.
   b. Haws.
   c. Western Emergency Equipment.
   d. Guardian.

C. Emergency Fixture Tepid Water Supply (EWH)

1. *Instantaneous Tepid Water Heater (EWH) [D]*: UL Listed point of use, tankless heater with flow switch activation, replaceable cartridge Ni Chrome heating element, 1-1/4 inch NPT fittings, and ABS splash proof enclosure. Thermostatic control shall continuously monitor outlet temperature and adjust output for variation in flow and pressure to accurately maintain outlet temperature to +/- 1 deg. F. Unit shall meet tepid water requirements of ANSI Z 358.1.
   a. Eemax EX60T EE.
   b. Chronomite Laboratories Inc.

2.8 PLUMBING SPECIALTIES

A. Hose Faucets (Hose Bibbs Inside Building)

1. Brass or bronze with 1/2 inch male inlet threads, hexagon shoulder, and 3/4 inch hose connection, per FS WW-P-541b, Type 65. Hose coupling screw threads per ANSI B2.4. Provide with vandalproof atmospheric type vacuum breaker.
   a. Chicago No. 5T.
   b. Woodford Model 24.

B. Water Hammer Arrestors

1. Water hammer arrestors: Commercially manufactured products with resilient members arranged to absorb the energy of pressure waves generated by valve closure in a line in which liquid is flowing. Rate and certify arrestors with inlets sized 1 inch and smaller per the Plumbing and Drainage Institute Standard PDI-WH201. Arrestors for larger system requirements shall be engineered for the service by the manufacturer.
   a. Josam 75000 Series.
   b. Smith 5005.
   c. Wade W-5.
   d. Zurn Z-1700 series.

C. Trap Primer

2. Provide ASSE Standard 1018 automatic trap seal primer suitable for use with up to four floor drains, bronze or brass body, with anti-siphon ports, ½ inch NPT female.
   a. Josam Series 88300.
   b. MIFAB MI-500 with MI-DU.

2.9 STALL SHOWERS

A. Shower Head
   1. TYPE SH- (HCP): Hand held shower with 1/2 inch inlet, integral automatic flow control of 2.5 GPM, adjustable spray pattern, plated metal hose with rubber liner, and 24 inch slide bar.
      a. Kohler K-9674.
      b. Powers P413-8-W.
      c. Speakman VS1000-123.
   2. TYPE SCV-1: The valve shall sense and correct for pressure changes in the water supply system and shall include anti-scald and anti-chill safety stops. It shall be chrome plated, with screw driver check stops, manual shut-off, 1/2" inlets and outlets for concealed piping and with a temperature range of 65degF to 115degF. Valve shall conform to requirements of ASSE 1016.
      a. Bradley, Equa-Flow 478 ACK.
      b. Delta, Scald Guard 1603-HDF.
      c. Powers, Hydroguard P-413-D
      d. Speakman, SM-1420-SS-VR-M.
      e. Symmons, Safetymix 4-500-X

2.10 MISCELLANEOUS MATERIALS

A. Escutcheons: Manufactured from nonferrous metals and chrome plated, except when AISI 300 Series stainless steel is provided.

B. Flashing: Lead for floor drains shall be fabricated from 4 pound, 36 inch square sheet lead.

C. Bituminous Coating:
   1. Koppers "Bitumastic 50".
   2. Porter Coatings Div. of Porter Paint Co. "Tarmastic 101".

D. Calking: Silicone, white, Type RTV.
   1. Dow.
   2. General Electric.

2.11 EXTENSION OF PIPING SYSTEM

A. Piping fittings and valves: Chrome plated, polished surface red brass or bronze.

B. Piping: Schedule 40 red brass per ASTM B 43.

C. Pipe fittings: Threaded brass or bronze per ANSI B16.15.

D. Stop valves and check valves: Straight or angle, cast or bar stock body and trim brass, bronze or stainless steel, rated for system service conditions. Compression type service rated valves are acceptable for water service through 1/2 inch IPS. Other valves per SECTION 15110 except

that body and trim finish may be “brushed” in lieu of “polished”. Valve wheels shall be “four lever” type for compression type valves and round or “four lever” type for other valves.

PART 3 EXECUTION

3.1 DRAINAGE SPECIALTIES INSTALLATION

A. Cleanouts
1. Provide cleanouts where indicated and as required by the applicable codes. Aesthetically locate cleanouts with respect to tile patterns, masonry bond and alignment. Coordinate installation with concrete and masonry work.
2. Connect underground system cleanouts by means of long sweep 1/4 bends or two 1/8 bends. Cleanouts in connection with threaded pipe, where indicated and accessible, shall be cast iron drainage, T-pattern, 90-degrees branch fittings with extra-heavy brass screw plugs of the same size as the pipe up to and including 4 inches.
3. Where cleanout plugs extend beyond the wall finish, furnish machine finished brass plates of sufficient depth to fit against the wall and cover the plug. Paint cleanout cover plates to match adjacent wall finish in lieu of being plated or polished.
4. Remove each threaded cleanout plug from the assembly and make free turning. Reassemble plugs with tetrafluorethylene tape applied to threads or lubricated with waterproof grease. Cleanout surfaces, which remain accessible after installation, shall be protected by plastic films during concrete placing operations.
5. Prior to acceptance of the system, demonstrate that cleanout plugs are easily removable and that cleanouts can be easily rodded with standard rodding tools in the space or clearance provided.

B. Floor Drains
1. Coordinate installation of floor drains with the work of placing concrete to assure proper drain elevation and floor slope.
2. Cast floor drains into the concrete at the time the floors are placed and make watertight.
3. Check drainage of surfaces by flooding with hose.
4. Where indicated, or required by code, furnish floor drains complete with trapseal primer and fitting.

C. Hub Outlet
1. At soil pipe stacks, vent stacks and roof conductors install hub end of TYPE CISP pipe flush with finished floor.
2. Where indicated, terminate hub outlet 2 inches above finished floor.

D. Roof Drains
1. Coordinate installation of roof drains with the work of installing built-up roofing to assure proper drain elevation.
2. Lubricate roof drain associated expansion joint slip surfaces with graphite and oil prior to installation, unless otherwise required by the manufacturer. Adjust packing.

E. Vertical Roof Conductor Expansion Joints
   1. Install at all roof drains with bottom outlet, except otherwise indicated on the DRAWINGS.

F. Flashing
   1. Flash floor drains in aboveground slabs with separate finish with 16 oz. copper, 24 inch square sheet. However, floors on ground, provided with membrane or metal pan waterproofing do not require lead flashing but shall have two additional layers of the waterproofing specified at the floor drains. Flashing shall not obstruct the weepholes.
   2. Flash and clamp cleanouts in floors provided with membrane or metal pan waterproofing as specified for floor drains.
   3. Roof sumps used with metal deck construction shall have deck clamps and shall be flashed with 4 pound lead, 36 inch square sheet.
   4. Roof sumps set in concrete construction shall have anchoring flanges and shall be flashed with 16 oz. copper, 36 inch square sheet.

3.2 PLUMBING SYSTEMS INSTALLATION

A. Plumbing Fixtures Equipment And Specialties
   1. Connect exposed to view supply and drainage trim for fixtures and equipment to the rough piping systems at the wall, unless otherwise specified under the item or indicated.
   2. Wall sleeves are not required at plumbing fixture supply and drainage piping in above grade building surface penetrations, unless otherwise indicated.
   3. Each lavatory shall be set 2 inches from the wall.
   4. Install fixtures per manufacturer's published instructions and as indicated. Calk plumbing fixtures adjacent to walls or floors to which they are attached to preclude dirt and vermin entry. In dietary areas, in lieu of escutcheon plates, calk piping penetrating building surfaces at point of surface penetration to prevent entry of dirt and vermin.
   5. Fixture Supports: Conceal lavatory fixture support arms with secure deep drawn chrome plated escutcheons. Securely bolt and anchor supports to the supporting surfaces.
   6. Supporting elements surface finish shall match that of supported piping systems as specified in SECTION 15100.
   7. Chrome plated piping fittings and valves shall be fabricated and installed with strap wrenches and padded tools to preclude injury to chrome plated surfaces.
   8. Testing and disinfection shall be performed as specified in SECTION 15100.
   9. Handicapped water closets shall be mounted so that the seat height is between 16 and 17 inches above the floor. For unusually low roughing problems, provide a 2 inch lift seat.
   10. Handicapped water closet flush valves shall be installed with operator on the stall wide side and not more than 44 inches above finished floor.
   11. Handicapped urinals shall be mounted so that the lip is 15 inches above the floor.
   12. Domestic water heaters for non-circulating systems shall be installed with a heat trap piping configuration located at the inlet and outlet of the water heater per requirements of ASHRAE 90.1, 2001, Article 7.2 b.

END OF SECTION

Revision History	
Date	**Rev. No.**
A	0
B	0
C	0
D	0
E	0
F	0
02-19-09	0

LMS/djo
[Y:\d\timsdatasf\BROOKHAVEN_NATIONAL_LABORATORY\SF070003\200-PROJEXEC\280-SPEC\15400.doc]

SECTION 15652

REFRIGERATION-HERMETIC CENTRIFUGAL CHILLER

PART 1 GENERAL

1.1 SUMMARY

A. Provide labor, materials and equipment necessary to furnish the indicated factory assembled and tested, packaged, self-contained, HERMETIC CENTRIFUGAL CHILLERS, including accessories as required for a complete, properly functioning, installation.

B. Related Work Specified Under Other Sections
   1. General Mechanical Requirement - SECTION 15050.
   2. Aboveground Piping Systems - SECTION 15105.
   3. Electrical Work - 16000 Series SECTIONS

1.2 QUALITY ASSURANCE

A. Standards
   1. The equipment and installation shall comply with the applicable portions of current editions of the following standards.
      a. ARI 550/590 for performance rating of centrifugal and rotary chillers.
      b. ANSI/ASHRAE Standard 15, Safety Code for Mechanical Refrigeration.
      c. Evaporator and condenser shall include am ASME “U” stamp and nameplate certifying compliance with ASME section VIII, Division 1 Code for Unfired Pressure Vessels as applicable for construction and testing of centrifugal chillers
      d. Controls shall comply with the requirements of FCC rules and Regulations Part 15, subpart 1 for radio frequency emissions of Class ‘A’ devices
      e. ASHRAE Standard 34 – Number Designation and Safety Classification of Refrigerants.
      f. ARI Standard 575 – Method of Measuring Machinery Sound and Vibration within Equipment Rooms.
      g. ARI Standard 740 – Refrigerant Recovery/Recycling Equipment.
      h. UL Listed and labled.

B. Requirements Of Regulatory Agencies
   1. Provide materials and equipment and execute the WORK, including test and inspections, per applicable provisions of Federal, State and local Government laws and ordinances and referenced codes and standards. Governing laws, ordinances, codes and standards constitute minimum requirements.

C. Source Quality Control
   1. Perform manufacturer’s standard shop tests for each component to ensure compliance with intent of these SPECIFICATIONS.

2. Each chiller shall be factory performance tested by the chiller manufacturer, in accordance with ARI-550-92. Zero tolerance in energy consumption and capacity will be required. Readings shall be taken at steady state conditions under 100%, 75%, 50%, 25%, and minimum load. Coordinate scheduling of tests with the sufficiently in advance to enable the OWNER to schedule witnessing of the tests.

CHILLER PERFORMANCE – ZERO TOLERANCE kW / Ton				
ECWT	% FULL LOAD			
	100	75	50	25
90.9				
90				
85				
65				

3. Shaft vibration shall be limited to 1 mil peak-to-peak displacement and a record of shop tests shall be included in Operating and Maintenance Manual.
4. Compressor surging during operation at design conditions will not be permitted.
5. Materials and equipment shall be the products of manufacturers regularly engaged in the manufacture of such products, shall essentially duplicate equipment that has been in satisfactory service prior to issue date of this CONTRACT and shall be supported by a service organization that is reasonably convenient to the site.
6. Chiller shall operate at full scheduled capacity with condenser water temperatures to 90°F. Unit shall be factory tested at condenser water temperatures of 90.9°F and normal operating conditions of 85°F. All capacities and efficiencies shall be provided before acceptance of chiller. The chiller shall start with 65°F condenser water and remain operational at condenser temperatures to 90.9°F.

D. Noise Control Design
1. Equipment noise in this section shall not exceed 90 level in dBA five feet from the unit measured in the free field per applicable standards. A record of shop tests shall be included in Operating and Maintenance Manual.

1.3 SUBMITTALS

A. Shop Drawings And Product Data
1. Furnish submittals for items that are identified in this SECTION by a different typeface and a bracketed code (e.g., **Item [L]**). Refer to Division 01 Section "Shop Drawings, Product Data and Samples," for definition of codes for types of submittals and the administrative requirements governing submittal procedure. Additional submittal requirements pertaining to this SECTION are specified herein under this Article.
2. Shop drawings submittals shall bear the CONTRACT DOCUMENTS identifying project name and number, shall be sequentially item numbered. Submit two (2) certified for construction prints and one legibly reproducible copy.
3. Shop drawings submittals shall include clearly delineated verification of compliance with the elements of the CONTRACT DOCUMENTS, including, but not limited, to a manufacturer's catalog cut and product data, performance data, details of configuration, construction (including machine dimensions and nozzle locations), support, functional ancillary provisions, utilities including power connections, wiring diagrams and sequence

of operations, installation details for construction field conditions, vibration amplitude limits for rotating equipment. Performance data shall be certified based upon a computer selection with the specified conditions and utilizing ARI approved computer selection procedures.

4. Submit integrated electrical drawings indicating power, control and instrument wiring interfacing with work under separate contracts for field work as well as factory assembled work. Manufacturer's electrical drawings are acceptable only when modified and supplemented to exactly reflect CONTRACT conditions. Wiring diagrams shall clearly identify starter interlocks, wiring by the manufacturer and wiring required by others at the project site. Clearly identify items such as pump interlocks, cooling tower interlocks, refrigerant leak detection, proof of flow sensors, system control panels and interfaces with the site monitoring and control system, where applicable. The "system" of drawings shall include: overall schematic (elementary) diagram of the entire system of power circuitry detailing the numbers of wire and conduit sizes, wiring diagrams showing the wiring layout of component assemblies of systems, interconnection wiring diagrams showing terminations of interconnecting conductors between component assemblies, systems, control devices, and control panels with interconnections, sequence of operation for components, assemblies or systems.
5. Include documentation clearly identifying equipment options and auxiliary devices being provided.
6. Furnish recommended spare parts lists for equipment.
7. Identify areas to be insulated; specify materials, thickness, and how to be applied.

B. Certificates
1. *Certificate [C]*: Submit manufacturer's data report, Form U-1, if subject to ASME code.

C. Guarantee
1. Guarantee [G] the unit to meet the operating conditions, capacity and performance conditions as specified and to remain serviceable for the following specified period. If either the unit or accessories fail to meet operating requirements or if failure of any part occurs during the guarantee period, rework or replace the affected items promptly to meet the CONTRACT requirements at no cost to the OWNER.
2. The OWNER reserves the option to request a performance test throughout the warranty period.
3. If no performance test is made, warranty shall extend for one year from date of initial operation. If a performance test is made, then warranty shall extend one year from date of OWNER'S acceptance of the performance test.
4. If unit fails to meet its guaranteed performance, then warranty shall extend twelve months from date of OWNER'S acceptance of modified unit.
5. Warranty shall include parts and labor replacement for the entire unit for the duration of the guarantee period.
6. Provide an alternate cost for an additional four year warranty for parts and labor.

1.4 OPERATING AND MAINTENANCE DATA

A. Furnish, per Division 01 Section "Operating and Maintenance Data," installation, operation, lubrication and maintenance instructions and spare parts data manuals for equipment provided under this CONTRACT.

B. Manuals shall incorporate data to enable operators and maintain personnel to understand the equipment, its potentialities, limitations and maintenance needs. Data on design, construction, installation and operating features shall be included. Data submitted shall exclude content which is not applicable to equipment purchased under this CONTRACT. Manuals shall include the following:
   1. Diagrams (See Shop Drawing requirements).
   2. System OEM components and assembly drawings as built.
   3. Equipment brochures, data and catalog cuts including:
      a. Performance: Normal and abnormal conditions.
      b. Installation.
      c. Operation.
      d. Trouble-shooting
      e. Safety precautions.
      f. Maintenance and repair.
      g. Nearest authorized representative and stocking spare parts source.
      h. Recommended spare parts.
      i. Certified Bid Evaluation Form.

1.5 PERSONNEL INSTRUCTION

A. Provide, prior to start-up, not less than 8 "classroom" and necessary field training hours for OWNER'S operating and maintenance personnel, upon mutually satisfactory arrangement with OWNER.

1.6 TOOLS

A. Provide one complete set of special tools as recommended by the manufacturer for field maintenance. Tools shall be contained in a locked toolbox and four keys shall be provided.

PART 2 PRODUCTS

2.1 HERMETIC CENTRIFUGAL WATER CHILLER

A. General
   1. *Hermetic centrifugal water chiller [D]*: Packaged assembly, self-contained; including but not limited to motor, centrifugal compressor, condenser, cooler (refrigerant evaporator), main disconnect switch, motor starter(s), microprocessor control center, oil pump, lubrication system, spring vibration isolation, insulation, noise control, accessories, marine water boxes, complete intercomponent piping and wiring ready for minimal field terminal

connections, and gage taps necessary for testing and maintenance. Provide lifting lugs conforming to requirements of ASME B30.20-2003 and ASME BTH-1-2005.

2. Units shall be per ARI Standard 550/590, latest edition, with the exception that zero tolerance in capacity will be required, in lieu of the allowable tolerances stated in Standard 550/590 Article 5.6.
3. Refrigerant shall be non-flammable, high thermodynamic efficiency, with lowest direct effect global warming potential, and conforming with ARI and ASHRAE Standards. Acceptable refrigerants are HCFC refrigerant R-123 and HFC refrigerant R-134a. (CFC refrigerants 11, 12 and 500 are not acceptable)
4. Manufacturers:
   a. Trane.
   b. Carrier.

B. Compressor Assembly

1. *Compressor Assembly [D]*: Provide single or multi-stage high performance, direct-driven or gear driven, centrifugal type with hermetically sealed compressor-motor assembly. Provide refrigerant cooled motor windings. Multi-stage designs shall include an inter-stage, flash refrigerant economizer.
2. Rotor shall be cast, high strength aluminum, statically and dynamically balanced and tested at least 25% above maximum operating speed. There shall be no critical speed within the operating range of the compressor.
3. Fit shaft with replaceable sleeve-insert type main bearings.
4. Provide a self-contained, forced-feed lubrication system with oil sump, mechanically driven positive displacement lube oil pump, heater, oil cooler, level gauge, thermostatically controlled oil temperature, pressure regulator, and all required filters, strainers, piping, fittings, and control valves. Lubrication system shall supply the proper oil pressure to bearings under all conditions of operation including total loss of power. Provide interlock and differential oil pressure cutout with starting equipment to allow the compressor to operate only when the required oil pressure is available at the bearings. Provide oil pump starter factory mounted and wired.
5. Provide stable operation, modulating capacity control from 100% to 10% of design capacity utilizing multiple radial vane or butterfly damper control and automatic hot gas bypass if required to maintain stable operation. Control shall include automatic stopping when load falls below 10% capacity point and automatic, unloaded, starting on load demand.
6. Capacity modulation shall be controlled by chilled water leaving temperature. The unit controller shall maintain chilled water leaving temperature to plus or minus 1/2 degF of the set point.
7. Provide compressor discharge line isolation valve.

C. Motors

1. *Motors [D,P]*: Motors shall be high efficiency type. Motors sized 1/2 HP and under shall be rated for 115 VAC power supply and motors sized larger than 1/2 HP shall be rated for 460 Volt, 3 phase, 60 Hz power.
2. Motor speeds shall not exceed 3600 RPM.

3. Prime mover motor enclosure shall be squirrel cage, induction type. Ancillary motors shall be per manufacturer's standard.
4. Provide motor winding RTD's located within each winding or motor casing temperature sensing and connect to the control circuit.
5. Provide reverse phase rotation protection as necessary to preclude damage to any component due to reverse rotation.
6. Provide motor bearing temperature sensing connected to the control circuit.

D. Motor Starter
1. Motor starter: Reduced voltage auto transformer type, 4160V, free standing.
2. NEMA 1 enclosure with lockable hinged doors and electrical lugs for incoming wiring.
3. Starter shall provide stepless compressor motor acceleration.
4. Starter shall include three leg sensing overloads, control transformer for all unit controls, three phase voltage and current readings, ground fault protection, high and low line voltage protection, phase rotation protection, lightning/surge protection, single-phase failure protection, momentary power interruption protection with controlled restart under synchronized conditions, and a non-fused lockable disconnect switch.

E. Refrigerant Condenser
1. *Refrigerant condenser [D]*: Shell-and-tube cleanable type. Provide condenser per ASME Unfired Pressure Vessel Code Section VIII regarding quality of materials used, methods of construction, design of components, and testing of materials, assemblies, connections, and appurtenances.
2. Minimum waterside working pressure shall be 150 PSI and minimum refrigerant side working pressure shall be saturation pressure at 125 degF of refrigerant used. Test vessels, not subject to ASME Code due to size or other limitations, at 1-1/2 times working pressure and full vacuum.
3. Seamless 3/4 inch minimum diameter copper tubing with integral fins, a minimum tube wall thickness of 0.035 inches at the valleys and individually removable from either end of shell. Tubes shall be 0.05-inch tube wall thickness at the plane lands and rolled or provided with a mechanical leak proof seal into the tube sheet. Provide and fit intermediate tube supports to preclude corrosion, vibration, and abrasion.
4. Furnish unit complete with marine type water boxes with separate cover and provision for venting and lifting. Provide vents and drains with valve for each pass. The highest pass shall be fitted with a ball valve isolated, one-inch stainless steel automatic air vent. Interior water box surfaces of condenser shall be finished with a two part epoxy coating.
5. Provide heat exchanger tubes individually removable from either end of shell.
6. For connections sized 2-1/2 inches and larger on chilled water and condenser water; provide mechanical grooved couplings as manufactured by Victaulic or Gruvlok and specified elsewhere in these specifications.
7. Provide isolation valve between condenser and evaporator.

F. Cooler (Refrigerant Evaporator)
1. *Cooler [D]*: Shell-and-tube cleanable type. Provide evaporator per ASME Unfired Pressure Vessel Code Section VIII regarding quality of materials used, methods of

construction, design of components, and testing of materials, assemblies, connections, and appurtenances.

2. Minimum waterside working pressure shall be 150 PSI and minimum refrigerant side working pressure shall be saturation pressure at 125 degF of refrigerant used. Test vessels, not subject to ASME Code due to size or other limitations, at 1-1/2 times working pressure or 45 psig, whichever is greater and full vacuum.
3. Seamless 3/4 inch minimum diameter copper tubing with integral fins, a minimum tube wall thickness of 0.035 inches at the valleys and individually removable from either end of shell. Tubes shall be 0.05-inch tube wall thickness at the plane lands and rolled or provided with a mechanical leak proof seal into the tube sheet. Provide and fit intermediate tube supports to preclude corrosion, vibration, and abrasion.
4. Design cooler to prevent liquid refrigerant from entering the compressor. Include a suction baffle or mesh eliminator, located above the tube bundle, to prevent refrigerant carry-over to the compressor.
5. Furnish unit complete with marine type water boxes with separate cover and provision for venting and lifting. Provide vents and drains with valve for each pass. The highest pass shall be fitted with a ball valve isolated one inch stainless steel automatic air vent. Interior water box surfaces of condenser shall be finished with a two part epoxy coating.
6. Provide heat exchanger tubes individually removable from either end of shell.
7. For connections sized 2-1/2 inches and larger on chilled water and condenser water; provide mechanical grooved couplings as manufactured by Victaulic or Gruvlok and specified elsewhere in these specifications.
8. Provide liquid refrigerant line isolation valve.

G. Electrical Requirements

1. Refer to SECTION 15050 “General Mechanical Requirements” for applicable general provisions.
2. Furnish UL Listed electrical components which include one or more control panels provided with: Power and control transformers; combination motor controllers, interlocks, relays, push buttons, pilot lights and other control devices; overload protection devices; audible and visual alarm, intercomponent and interassembly power and control wiring harnessed in bundles to and between terminal blocks per NEC and NEMA requirements. Equipment mounted panels shall be factory furnished and wired to equipment. Provide an installation diagram for interassembly wiring required for field connections.
3. All enclosures shall be NEMA 12 type, unless otherwise specified.

H. Control System

1. *Control System [D]*: Provide specified control system components and control devices normally furnished for best operation of chiller under specified conditions.
2. Control system shall be completely factory assembled and tested and shall include NEMA 1 control panel and intercomponent piping and wiring ready for minimal field terminal connections.
3. Microelectronics controller shall be provided that will include an alphanumeric display for operator interface with chilling unit with the following minimum information to be transferred through BACnet control interface to WonderWare:
   a. Date and time of day.

b. Operating hours.
c. Temperature of water entering condenser.
d. Temperature of water leaving condenser.
e. Temperature of water entering evaporator.
f. Temperature of water leaving evaporator.
g. Motor winding temperature.
h. Bearing Temperature.
i. Refrigerant temperature in condenser.
j. Refrigerant temperature in evaporator.
k. Refrigerant pressure in condenser.
l. Refrigerant pressure in evaporator.
m. Differential oil pressure or supply oil pressure.
n. Oil temperature.
o. Compressor discharge temperature.
p. Control Point Settings.
q. Number of motor starts.
r. Percent full load motor current.

4. Provide a BACnet compatible control interface with RS-485 connection to BACnet network.
5. Provide safety interlocks to protect the machine against starting when damage may occur with improper conditions. These conditions shall include the following list as a minimum:
   a. Low water flow in condenser.
   b. Low water flow in evaporator.
   c. Low oil pressure or low differential oil pressure.
   d. High oil temperature.
   e. High motor winding temperature.
   f. Low evaporator refrigerant temperature.
   g. High condenser refrigerant pressure.
   h. High bearing oil temperature.
   i. High compressor discharge temperature.
   j. Prolonged surge.
   k. Power/starter faults
      1) Motor over-current.
      2) Over voltage.
      3) Under voltage.
      4) Phase failure.
      5) Phase unbalance.
      6) Phase reversal.
      7) Distribution fault.
      8) Ground fault.
6. Provide for the following remote functions:
   a. One contact for all alarm conditions.
   b. One contact for unit operating status.
   c. Remote start-stop, except on safety shutdown.
   d. Remote chilled water temperature reset.

I. Vibration Control
   1. *Vibration control [D]*: Spring type for on-grade location.
   2. *Vibration switch [C]*: Furnish unit complete with manufacturer's standard vibration switch for chiller protection.

J. Noise
   1. Design the chiller(s) to generate a noise level not exceeding 90 dB(A) when measured in accordance with ARI 575. If the chiller noise level exceeds the specified level, wrap all the necessary components, not limited to the motor, compressor, and gearbox, with leaded vinyl, high density, non-wicking fiberglass or solid sheet metal adequate to achieve the specified level.

K. Insulation
   1. *Insulation and Vapor Seal [C,P]*: Insulate and vapor-seal surfaces, which are at 60 degrees F or less surface temperature at normal operating conditions. At a minimum, the evaporator shell, water box and compressor suction line shall be insulated. For areas requiring "burn" protection on hot surfaces, thermal insulate only, vapor seal not required.
   2. Insulation-vapor-seal material shall be non-wicking, cellular elastomer in manufacturer's standard thickness or ¾ inch, whichever is thicker, to preclude condensation on any surface under site operating conditions.

L. Refrigerant Relief Valves
   1. Provide refrigerant relief valves factory sized and installed on each chiller per ASHRAE Standard 15. For low pressure refrigerant chillers, provide a combination reverse buckling, non-fragmenting rupture disk and resetting relief valve in series. For positive pressure refrigerant chillers, provide redundant, resetting relief valves in lieu of the rupture disk and resetting relief valve.
   2. Provide a refrigerant leak detection monitor pick-up point on the relief valve discharge line.

M. Refrigerant And Oil Charge
   1. Provide a complete initial charge of refrigerant and oil and make-up any losses resulting from faulty manufacture or malfunction of equipment during the length of the warranty.
   2. Each unit shall be tested for leaks under pressure and shall be evacuated and dehydrated to 35 degF wet bulb or an absolute pressure of not over 0.15 inch of mercury.

N. Painting And Protection
   1. Prime and finish paint uninsulated surfaces using manufacturer's standard paint. Fit openings with suitable protective covers prior to shipping.

2.2 REFRIGERANT LEAK DETECTION

A. Refrigerant Leak Detection And Alarm
   1. *Refrigerant leak detection monitor [D]*: Refrigerant leak detection monitor system: Provide a refrigerant leak detection system of the continuous monitoring type for each mechanical equipment room where refrigeration equipment will be located. Detection system shall be compatible with the specific refrigerants to be present in the cooling equipment and shall comply with the requirements of ASHRAE Standard 15. Locate

detector sensing pick-up points a maximum of 18 inches above the floor. Upon detection of a refrigerant leak, the system shall indicate an audible and visible alarm and start the equipment room "emergency ventilation" exhaust. System shall be 120 VAC, single phase, 60 Hz and be U.L listed.

PART 3 EXECUTION

3.1 FIELD QUALITY CONTROL

A. Check, Test And Start-Up
   1. Provide all labor and materials for equipment check out and testing by a factory trained and authorized representative of the refrigeration machine manufacturer prior to starting the machine. Upon successful check out and testing, machine shall be started by the manufacturer's Service Technician. The report of check, test and start-up shall be documented and certified in writing on the manufacturer's standard forms.

B. Installation And Run-In
   1. Installation and related work shall be performed under the direction of an authorized representative of the manufacturer.
   2. Start-up and run-in shall be performed under the direction of an authorized representative of the manufacturer who shall inspect, make critical adjustments of equipment and calibration of controls, to verify a complete, properly functioning installation with capacity as scheduled.

C. Field Start-Up Vibration Test
   1. At time of start-up, the manufacturer's qualified, authorized representative shall test with a certified calibrated vibrometer, readable to 0.0001 inch displacement, prime mover related rotating machinery to deliver to OWNER, two copies of readings taken in the presence of the OWNER'S REPRESENTATIVE.
   2. Readings shall be taken at steady state conditions under 100%, 75%, 50%, 25%, 10%, 5% and zero loads, as well as under transient load change conditions.
   3. Reading shall be compared with those of factory shop tests.

D. Field Tests During Guarantee Period
   1. General
      a. Testing to determine compliance with requirements of CONTRACT DOCUMENTS shall be performed per the following:
         1) Testing procedures for items not delineated in CONTRACT DOCUMENTS, shall be mutually agreed upon, in writing, prior to start of testing.
         2) Test procedure participant's costs shall be borne by:
            a) The OWNER if compliance is verified.
            b) The CONTRACTOR if testing indicates failure to comply.
      b. Testing will be performed in the presence of the OWNER'S REPRESENTATIVE.
      c. If the testing or retesting of the unit furnished under this CONTRACT should indicate failure to meet the requirements of the CONTRACT DOCUMENTS, the CONTRACTOR shall be responsible for whatever additions, modifications or

replacements may be necessary to provide the OWNER with a unit which fully conforms to these performance requirements. Repair work shall be scheduled at a time convenient to the facility being served.

2. Equipment Vibration
   a. In the event that OWNER determines that testing is required, specified limits of vibration shall be verified under operating conditions by an independent equipment and testing source such as Entek IRD.
3. Performance Testing
   a. In the event that OWNER determines that testing is required, the test procedures of the ARI Standard 550 shall be utilized.

END OF SECTION

Revision History	
Date	**Rev. No.**
A	0
B	0
C	0
D	0
E	0
F	0
02-19-09	0

LMS/djo
Y:\d\timsdatasf\BROOKHAVEN_NATIONAL_LABORATORY\SF070003\200-PROJEXEC\280-SPEC\15652.doc

THIS PAGE INTENTIONALLY LEFT BLANK

SECTION 15700

ENVIRONMENTAL EQUIPMENT

PART 1 GENERAL

1.1 SUMMARY

A. Scope
   1. Provide labor materials and equipment to provide environmental equipment installation, as shown or specified, and as required for fully operational, complete installations.

B. Description Of System

C. Related Work Specified Under Other Sections
   1. Division 15 Section “General Mechanical Requirements.”
   2. Division 15 Section “Thermal Insulation.”
   3. Division 15 Section “Aboveground Piping Systems.”
   4. Division 15 Section “Steam and Condensate Specialties and Equipment.”
   5. Division 15 Section “Air Distribution and Exhaust.”
   6. Division 16 Section “Electrical Work.”

1.2 QUALITY ASSURANCE

A. Vibration Control Design
   1. Under installed, operating conditions, equipment and piping vibration measured at specified or approved points in mils peak-to-peak displacement or velocity in inches/second shall not exceed the following:
      a. Limits specified under specific equipment.
      b. Limits specified in the latest edition of ASHRAE Handbook: HVAC Applications, Sound and Vibration Control Section.
      c. Limits for motors shall be per NEMA MG-1 standards.
      d. Limits specified by Owner’s standards.
   2. Provide vibration isolation according to ASHRAE Handbook: HVAC Applications or Owner’s standards.
   3. Provide shop and field balancing and testing as required to show compliance.

B. Noise Control Design
   1. Equipment noise in this section shall not exceed 80 level in dBA five feet from the unit measured in the free field per applicable standards.
   2. The intent is to meet OSHA requirements and space requirements according to the noise criteria.
      a. Refer to Division 13 Section “Noise Control” for other specific noise criteria.

1.3 SUBMITTALS

A. Refer to Division 15 Section “General Mechanical Requirements.” for applicable requirements.

B. Submit shop drawings showing details of unit construction, supports, reinforcement, access doors, configuration and accessory installation for construction where these are field conditions.

C. Submit shop drawings for fans with complete information on fan construction and performance. Include a complete set of performance curves for each fan.

D. Submit shop drawings for coils which show coil compliance with specified and indicated requirements, which include actual air leaving conditions compared to indicated requirements and applicable drawings showing installation position for coil to be drainable as specified.

E. Submit shop drawings which include tabular or graphic performance covering usable range for the system unit filters provided.

F. *Test report [R]*: Submit three copies of final belt tension tabulation for belt drives.

1.4 RECORD DOCUMENTS

A. Refer to Division 15 Section “General Mechanical Requirements.” for applicable requirements.

1.5 OPERATION AND MAINTENANCE DATA

A. Refer to Division 15 Section “General Mechanical Requirements.” for applicable requirements.

1.6 PROJECT CONDITIONS

A. Delivery Of Materials
   1. If helicopters are used as the lifting means when placing roof mounted units, make arrangements, obtain approvals, schedule the work to preclude interference with other work, take necessary safety precautions, and assume complete responsibility for the results of this activity.

PART 2 PRODUCTS

2.1 FAN POWER TRANSMISSION

A. General
   1. *Fan drives [D]*: V-belt type per Engineering Standard Specification for Drives Using Multiple V-Belts, sponsored by the Mechanical Power Transmission Association and the Rubber Manufacturer’s Association.
   2. A given manufacturer’s V-belt drive, as applied to specific equipment provided under the SPECIFICATION, shall conform to that manufacturer’s published recommendations, except as otherwise provided herein.

3. Base horsepower rating of drive on minimum pitch diameter of smaller sheave.
4. For drives with motors up to and including 10 horsepower, use “STANDARD” belt section, adjustable or variable sheave type, with a service factor of not less than 1.4. For drives with motors over 10 horsepower up to and including 40 horsepower use “STANDARD” section, fixed sheave or variable sheave type, with a service factor of not less than 1.5. Drives with motors over 40 horsepower shall be fixed sheave, high capacity “SUPER” belt section with a service factor of not less than 1.25.
5. Locate belt drives outboard of bearings. Align drive and driven shafts by the four-point method.
6. Adjust belt tension per the manufacturer’s recommendations.
7. Furnish power transmission equipment complete with OSHA compliant guards and screens.

B. Sheaves
1. Sheaves: Machined cast iron or carbon steel, bushing type of fixed bore, secured to the shaft by key and keyway.
2. Set pitch diameters of fixed pitch and adjustable or variable pitch sheaves when adjusted as specified herein, at not less than that recommended by NEMA Standard MG1-14.42.
3. For companion sheaves for adjustable or variable pitch drives, furnish wide groove spacing to match driving sheaves except that standard fixed pitch spacing may be used for two-groove and three-groove drives whose center to center distances equal or exceed the following:

BELTS	DISTANCE INCHES
A and B	20
C	28
D	36

C. Belts
1. Endless type of dacron reinforced elastomer construction, with cross-section to suit sheave grooves. Determine the number of V-belts from the motor horsepower to apply the service factor to obtain the design horsepower. Divide the design horsepower by the corrected horsepower per belt to obtain the number of belts required. In any case, furnish not less than two belts for each drive.
2. Furnish belts, factory or factory-authorized distributor matched and measured on a belt-matching machine. Selection by “code numbers”, “sag numbers” or “match numbers” is not acceptable. Bind each belt set with wire and tag with equipment identification.

D. V-Belt Drive Motor Bases
1. Furnish adjustable pivoted bases with fan motors wherever equipment configuration permits proper installation. Otherwise, provide adjustable slide bases.

E. Air Handling System Balancing Provisions
1. Provide facilities for the adjustment of fan speed for each air handling system during air quantity balancing operations. Furnish any of the following:
   a. A variable-pitch drive of variability range to produce the fan speed necessary for proper air balance.

b. A continuously variable drive or power unit to produce the fan speed necessary for proper air balance.
c. A series of fixed-pitch pulleys which can be interchanged until the proper fan speed has been determined.

F. Flexible Coupling (Direct Drive)
1. Flexible coupling: Use to connect fan shaft to the motor shaft. The flexible member shall be a tire shape, in shear, or a solid mass serrated edge disc shape, made of chloroprene materials and retained by fixed flanges. Flexible coupling shall act as a dielectric connector and shall not transmit sound, vibration or end thrust.
a. Dodge “Paraflex”.
b. Koppers “Elastomeric”.
c. T. B. Woods “Sureflex”.

G. Motor Requirements
1. Motors: Furnish per Division 15 Section “General Mechanical Requirements.” for applicable requirements.
2. Motors located in airstream shall be totally enclosed.
3. Brake horsepower input shall not exceed rated motor horsepower.
4. Manual disconnect switches shall be provided for all motors. Switches shall be of visible blade type, with padlocking handles.

2.2 FANS

A. General
1. *Fans [D]*: Comply with the following:
a. Performance Data - AMCA Standard 210.
2. Sound Power Level Ratings:
a. Ducted Fans: Rate per AMCA 301, when tested per AMCA 300.
b. Nonducted Fans: Rate in Sones at 5 feet from acoustic center of fan rated per AMCA 301, tested per AMCA 300 and converted per AMCA 302.
3. Sound power for fans: Not to exceed values listed on the DRAWINGS by more than 3 dBA.
4. Unit Construction: AMCA Standards and Seals.
5. Safety Provisions: Include guards and screens for power transmission equipment, but do not negate vibration isolation provision. Refer to “DRIVE AND COUPLING GUARDS”.
6. Nameplate: Affix metallic, corrosion-resistant data plate for each fan in a conspicuous location. Include selection point capacity conditions.
7. Field Rigging: Do not negate balancing. Do not bend shaft. Use lifting eyes.
8. Bearings: Anti-friction ball or roller type with provision for self-alignment and thrust load. Made in U.S.A. with L10 minimum life of 50,000 hours for low pressure fans (under 1-1/2” S.P.) and 120,000 hours for fans with static pressures greater than 1-1/2” at maximum operating conditions. Use cast iron housings and dusttight seals for lubricant pressures.
a. Lubrication Provisions - Use surface ball check type supply fittings. Provide extension tubes to allow safe maintenance while equipment is operating. Provide

manual or automatic pressure relief fittings to prevent overheating or seal blow-out due to excess lubricant or pressure. Arrange relief fittings opposite supply but visible for normal maintenance observation.

b. Bearings on Equipment with less than 1/2 horsepower rating - Permanently sealed, prelubricated anti-friction bearings per specified materials and L10 life requirements.

9. Bird Screens: Of material to match adjacent contact construction, 1/2 inch mesh or equal expanded metal. Use on inlet or outlet of each fan if not ducted.
10. Manual Disconnects: On Roof Mounted Supply or Exhaust Fans; Mount on casing exterior. Use on motors up to and including 10 HP with provision for padlocking in open position. Disconnect switch shall be visible blade type. Use for single or three phase motors, single or three pole. Mount in NEMA 12 for indoor locations or NEMA 4 for outdoor. Use Type XHHW stranded conductors in flexible metallic, liquid-tight conduit and extend to four feet below underside of roof for power supply connection.
11. Roof Curb Sealant Tape: Sealant tape, one inch wide minimum, 1/8 inch thick, applied at loads not exceeding 5 PSI.
    a. 3M “Weatherban 1201T”.

B. Power Wall Ventilator (EF-2)
1. *Wall ventilator [D]*: Propeller type, constructed of heavy gauge steel, with square panel, spun inlet venturi to wheel, and baked enamel finish. Fan inlet guard shall be constructed of heavy duty zinc-plated steel rings and conform to OSHA standards. Provide flanging and reinforcing to stiffen panel. Weld corners. Phosphatize panel and stiffeners and finish with manufacturer’s standard finish.
2. Propeller shall be cast aluminum or steel construction. Belt drives shall be sized for a minimum of 150 percent of driver horsepower. Belts shall be nonstatic oil-resistant type. Motor shall be mounted on sliding mounts.
3. Fan shall be complete with motor side guard, wall collar, closure angles, motorized low leakage damper with end switch to open damper before fan is energized, factory-mounted and-wired nonfused disconnect switch.
4. Manufacture:
    a. Aerovent Model “BP”.
    b. Greenheck “Sidewall Propeller Fans” Model “SBE”.
    c. Penn Ventilator “Breezeway” Model “FB”.
    d. American Coolair “PFB”.
    e. Acme “Propeller Fans”.
    f. Hartzell “Propeller Fans” Series.
    g. Cook “Propeller Fans” Model “SWB”.

C. Roof Exhaust Fans (EF-6)
1. *Centrifugal roof type ventilator [D]*: Direct or belt-drive as indicated, nonoverloading backward inclined wheel with drive vibration isolated with elastomer.
2. Mount drive components in a compartment isolated from airstream.
3. Fabricate weather exposed housing materials of aluminum. Provide hood type weatherproof housing with integral deep flange curb flashing and manufacturer’s standard gravity back draft dampers and bird screen.

4. Manufacture,
    a. Penn Ventilator, Domex
    b. Acme, PNN
    c. Cook, ACE
    d. Hartzell, BDD
    e. Greenheck, GB Series
    f. Aerovent, FACX

D. Tubeaxial Fan (EF-7 and EF-8)
1. Tubeaxial fan [D]: Provide AMCA certified and UL listed inline fans of the axial type with fabricated steel airfoil propellers with belt drive and capacity as scheduled. Fan tube and curb cap shall be constructed of heavy gauge steel with heavy gauge welded steel reinforcing gussets. Curb cap shall have prepunched mounting holes. Windband shall be constructed of heavy gauge painted steel with reinforced edges. Bearing support, and motor base shall be constructed of structural members to prevent vibration and rigidly support the shaft, bearings, and motor. Steel housings, propellers, and structural components shall be protectively coated with minimum 1.5 mil thickness electrostatically applied thermosetting polyester urethane.
2. Propeller blades shall be airfoil design. Blade gussets shall be die formed and welded to the blade stem. Propellers shall be statically and dynamically balanced to G6.3. A standard square key or tapered bushing shall lock the rotor to the fan shaft. Bearings shall be cast iron pillow block, grease lubricated and self aligning, air handling quality and tested for reduced swivel torque, bore size, noise, and vibration. Bearings shall be selected for an L(10) life of 40,000 hours.
3. Turned, precision ground and polished steel shafts shall be sized so the first critical speed is at least 125% of the maximum operating speed for each level of construction.
4. Manufacture:
    a. Greenheck, TBI-FS.
    b. Aerovent.
    c. Joy.
    d. Hartzell.
    e. Woods.

E. Axial Vertical Discharge Exhausters (EF-9 and EF-10)
1. *Up-blast belt-drive propeller type fans [D]*: For noncorrosive service with gravity butterfly dampers and a flanged cylindrical casing with provisions for support requirements indicated.
    a. Fabricate throat and curb assembly as a one piece spinning or a continuously welded assembly with stiffeners continuously welded to curb and throat.
    b. Fabricate wind band joints either continuously welded, flanged and bolted, spot welded or riveted on 3 inch centers minimum.
    c. Construct the unit to permit easy removal of the wind band and access from roof to fan and motor unit for servicing and removal. Bottom of wind band shall be 24 inches minimum above finished roof.

2. *Butterfly gravity dampers [D]*:
   a. Construct of galvanized carbon steel, 20 gage minimum, stiffen by cross-braking, with beading reinforced to prevent oil-canning and excessive vibration during operation.
   b. Extend damper axle shaft the full width of damper and securely fasten by rolling or riveting.
   c. Furnish shaft bearings of oil impregnated, bronze, nylon or tetrafluorethylene located out of airstream.
   d. Furnish spring or counterweight loaded dampers with a 165 deg F fusible link release to open in event of fire. Aluminum dampers are unacceptable.
3. Propeller: Provide with a minimum of four blades, V-belt drive, adjustable motor sheave and adjustable motor base mounted outside the air stream.
   a. Construct propeller of one piece aluminum casting or of die formed sheet steel, or continuously welded or riveted construction and with taper-lock bushings.
   b. The propeller shall be statically and dynamically balance in accordance to AMCA Standard 204-05.
   c. The propeller and fan inlet shall be matched and shall have precise running tolerances for maximum performance and operating efficiency.
4. *Unit [D]*: Fabricate of sheet metal and structural parts of galvanized iron or steel. Paint areas burned by welding and exposed raw edges with a two coat application of inorganic zinc rich protective coating.
5. *Motor [D,P]*: TEAO type two speed motor, 460 VAC, 3 phase, 60 hertz with heavy duty sealed bearings containing a lubricant suitable for continuous service and temperatures up to 150 degF. Refer to Division 15 Section “General Mechanical Requirements” for additional requirements. Securely bolt motor to its mounting, using lock washers, locking nuts or castellated nuts and cotter keys. Use largest diameter bolts that can be used with holes in motor frame feet. If frame feet are slotted, elongated or out-of-round, dowel motor feet in at least two places on a diagonal.
6. *Manual disconnects [D]*: Provide as specified under “GENERAL”.
   a. Aerovent Fan Company, Inc.
   b. Penn Ventilator Hi-Ex.
   c. Greenheck Model RBU.
   d. Hartzell Series 63.
   e. Cook Model LEU.

2.3 FAN DRIVE AND COUPLING GUARDS

A. General
   1. Guards: Furnish mechanical power transmission apparatus per applicable requirements of OSHA except where superseded by other governing codes, and except as modified and supplemented herein. Requirements specified herein apply to all types of fans.
   2. Fabricate mechanical power transmission device guards such that the completed structure is capable of withstanding a load of at least 200 pounds applied in any direction.
   3. Furnish a guard enclosure for each V-belt drive, coupling and rotating component. Secure guards in place, easily removable for maintenance. For guard fasteners used for maintenance access furnish “captive type”. Locate holes on each guard for tachometer

readings on both the motor and fan shafts. Fabricate guard of 16 gage sheet metal with hemmed edges at openings for shafts. Weld four mounting lugs or feet of 10 gage material to the guard. Fabricate guards for couplings five inches in diameter and larger of 12 gage sheet metal. Furnish holes in mounting feet sized for suitable machine screws.

B. Belt Drive Guards
   1. Belt drive guards: Fabricate guards to completely enclose moving parts of the particular drive. Design and construct guards of such rigidity as to contain a belt which breaks during operation. Minimum material thickness, 16 gage sheet metal. Where ventilation is required, perforated metal as described below shall be used for the sides. Fabricate top of solid sheet metal.

C. Perforated Metal Panels
   1. Perforated metal panels: Construct panels of a minimum of 16 gage sheet steel with staggered 0.375 inch round holes on 0.531 inch centers; openings not to exceed 46% of the panel area. Reinforce edges with 1/8 x 1 inch flat iron on both sides of the perforated panels, welded or bolted together on 10 inch centers.

2.4 ROOF CURBS

A. *Roof curb [D]*: Factory fabricated, fan matched 14 inches high or more, 14 gage steel, with cant strip, gravity damper, wood nailer, and 2 inch thick mineral fiber insulation for sound attenuation. Install per manufacturer's instructions.
   1. Penn "Unibeam".
   2. Jenn-Air "AC Series".
   3. Greenheck "Model GPR".
   4. Aerovent.
   5. Pate.

2.5 ELECTRIC UNIT HEATER (EUH-3 THRU EUH-6)

A. *Electric unit heater (EUH-3 and EUH-4) [D]*: Remote thermostat; Heavy gage bonderized steel casing with baked enamel finish, direct drive aluminum fan, prewired and resiliently mounted fan motor, heating elements and mounting devices. Power supply voltage/24 V control transformer, magnetic contactor, automatic reset high temperature limit and motor winding temperature limit and prewired terminal board for field wiring space thermostat. Thermostat furnished and installed under Division 13 Series Sections.
   1. Markel Electric.
   2. Modine.
   3. Qmark.

2.6 STEAM UNIT HEATER (SUH-7 THRU SUH-12)

A. *Steam unit heater (SUH-7 thru SUH-12) [D]*: Suspended vertical type steam unit heaters arranged for discharge of air with adjustable outlet as indicated, rated per AMCA Standards. Manufacturer's standard nonferrous construction heating element, rated for service at not less than 300 degF at 75 psig. Construct casings of not less than 20 gage cold rolled black carbon

steel. Casing surface finish shall include phosphate pretreatment, prime coating and baked enamel finish. Furnish propellers, manufacturer's standard, dynamically balanced. Provide and resiliently mount motors per Division 15 Section "General Mechanical Requirements."

1. Trane, P Series.
2. Modine.
3. Air Therm.
4. Sterling.

2.7 STEAM FINNED TUBE RADIATION

A. Finned Tube Radiation

1. Furnish with heating elements and supports.
2. Rate finned tube assemblies for not less than indicated capacity per IBR "Testing and Rating Code for Finned Tube Radiation", and CS-140-47.
3. Rate system pressure components including heating elements for the service expansion. Rate accessories for service at not less than 300 degF and 50 PSIG.
4. Steel single row 1-1/4" heating element with steel fins shall deliver heat output as indicated; fins 3-1/4 x 3-1/4 inch with thickness of 0.032-inch minimum and spaced 20 fins per foot minimum. Length as shown on DRAWINGS.
5. Provide minimum 18 gauge cold rolled steel enclosures with sloped top and electrostatically applied, baked enamel finish, color as selected by the architect from the manufacturer's standard color schedule. Discharge openings shall be die cut into the enclosure. Review drawings to identify where wall-to-wall cover is required. Field measure actual construction prior to manufacturing enclosure to assure good fit. Field cutting to fit will not be permitted. For finished end installations, provide necessary end caps for a complete installation. Include access doors in the enclosure as necessary to allow ready access to manual and automatic valves for maintenance and inspection.
6. Refer to 13800 Series Sections for control valves and thermostats.
   a. Sterling, JVA-S-14 with S-132 element.
   b. Dunham-Bush.
   c. Standard.
   d. Webster.
   e. Vulcan.

2.8 HEATING VENTILATING AND AIR CONDITIONING UNIT (ACU-2)

A. General

1. *ACU-2 [D]*: "Packaged" central station type, air handling unit, factory fabricated and sectionally or fully assembled, including components and auxiliaries as indicated and specified elsewhere herein, and classified and defined, as applicable, under ARI Standard 430-66 Section 3, 4 and 5.
   a. Trane "Climate Changer" T Series.
   b. McQuay.
   c. TMI.
2. Performance test and rate air handling unit and components, where applicable, per AMCA Bulletin 211a and AMCA Bulletin 210, except as otherwise specified. Provide air handling

ratings per Section 7 of ARI 430 and classify total static pressure per AMCA Standard 1401.

3. Provide auxiliary equipment including but not limited to: Piping, coils, fan, motors, variable frequency drives where indicated, motor starters where indicated, disconnect switches in NEMA 1 enclosures, drives, filters, thermal insulation and dampers, per CONTRACT DOCUMENTS.

B. Unit panels shall be solid double-wall construction. All exterior wall panels shall be made of galvanized steel. The casing shall be able to withstand up to 1.5 times design static pressure, or 8" WC, whichever is less, with no more than 0.005 inch deflection per inch of panel span. The unit base design shall allow unit to rest on top of roof curb when field installed.

C. Unit shall be factory insulated. Panels and unit roof shall be of double-wall construction with interior and exterior panels and insulation. Panel insulation system shall provide a minimum R value of 12. Insulation shall conform to NFPA 90 requirements.

D. Unit roof shall be constructed of two pieces. Inner roof shall be installed in such a manner as to prevent air bypass between internal components. Outer roof shall be sloped a minimum .25" per foot either from one side of unit to other, or from center to sides of the unit.

E. Access doors shall be constructed with a double-wall of solid G90 galvanized steel interior panel. Automotive style gasketing around the full perimeter of the access door shall be used to prevent air leakage. Door gasketing shall be mounted to the perimeter of the door and shall seal against a raised door frame. Door frame shall channel water away from gasket. Door shall have a protective flange to shield gasket from exposure. Preferred door handle shall not penetrate door casing. Door shall have a single handle latch.

F. Fan Section

1. Fan shall be double-width, double-inlet, multiblade type minimum class II regardless of static pressure. Fan shall be curved, backward inclined, as required for stable operation and optimum energy efficiency. Fan shall be equipped with self-aligning, antifriction bearings with an L-10 life of 200,000 hours. Fan performance shall be certified as complying with ARI Standard 430-89.
2. The vibration levels of the complete fan assembly shall be checked and excessive vibration shall be eliminated in the factory. Fan shaft shall be properly sized and protectively coated with lubricating oil. Fan wheels shall be keyed to fan shaft to prevent slipping. Fan shafts shall be solid and designed so that fan shaft does not pass through its first critical speed as the unit comes up to its rated rpm. Fan shafts shall not exceed 75 percent of their first critical speed at any cataloged rpm. Fan shall be provided with an access door on the drive side of the fan.
3. Fan connection shall be isolated from unit casing by a flexible canvas duct. One-Inch Spring Isolators — Fan and motor assembly shall be internally isolated from the unit casing with 1-inch deflection spring isolators, furnished and installed by the unit manufacturer.

G. Cooling Section

1. Coils shall be installed such that headers and return bends are enclosed by unit casings. Coils shall be removable by unbolting the wall panels in the coil section. Coil connections shall be clearly labeled on outside of units. Coils shall have aluminum plate fins and seamless copper tubes. Fins shall have collars drawn, belled and firmly bonded to tubes by mechanical expansion of the tubes. Soldering or tinning shall not be used in the bonding process. Fin surfaces shall be cleaned prior to installation in the unit to remove any oil or dirt that may have accumulated on the fin surfaces during manufacturing of the coil. Capacities, pressure drops and selection procedure shall be certified in accordance with ARI Standard 410. Coil casing shall be a minimum 16-gauge 304 stainless steel with formed end supports and top and bottom channels. If two or more coils are stacked in the unit, intermediate drain channels shall be installed between coils to drain condensate to the main drain pans without flooding the lower coils or passing condensate through the airstream of the lower coil.
2. Coils shall be burst tested to 450 psig and proof tested to 300 psig air pressure under water. After testing, coil circuiting will be air dried, charged with dry nitrogen, and sealed to ensure that circuiting is free of any water or contaminants. Liquid and suction headers shall be constructed of copper and shall penetrate unit casings to allow for sweat connections to refrigerant lines. Coils shall have equalizing vertical distributors sized according to the capacities of the coils.
3. Cooling coils and moisture eliminators shall be provided with a galvanized or stainless steel, two-way sloping IAQ drain pan to allow for proper condensate removal. Access or blank sections may be provided with an IAQ drain pan when specified.

H. Heating Section

1. Steam heating coils shall be of the nonfreeze inner steam distributing type permitting counter flow of steam and condensate. Outer tubes to be a minimum of 1 inch OD x 0.035 inch wall thickness; inner tubes to be of minimum 5/8 inch OD x 0.025 inch copper. The headers shall be constructed of Schedule 40 steel. The casings shall be of heavy gage hot rolled steel with adequate space for expansion and contraction of the coil, flanged and punched for easy mounting in the air handling unit. The coil face velocity shall not exceed 700 FPM. Horizontally mounted steam coils shall have the supply and return connections on one end and shall be limited to a maximum coil length of six feet. The tubes shall be fitted with pure copper or aluminum extended fins. Spiral fins shall be copper soldered to tubes. Plate type fin coils may have tubes mechanically expanded into fins or may be soldered.
2. Provide ultra low-leakage face and bypass dampers with minimum 14-gauge galvanized steel double-skin airfoil blades and minimum 16-gauge galvanized steel damper frames. Blades shall be of opposed blade action, with metal compressible jamb seals and extruded vinyl blade edge seals. Blades shall rotate on stainless steel sleeve bearings. Face damper and bypass damper shall be mechanically linked together and provide end driven control shafts.

I. Filter Section

1. Filter section shall have filter racks, an access door for filter removal and block-offs as required to prevent air bypass around filters.

2. Provide viscous impingement type filters with filtering media of nominal 2 inch thickness industrial type glass fiber with an initial resistance of no more than 0.28” WG, rated at MERV 7 with face velocity of 500 FPM when tested per ASHRAE Standard 52.2, 1999. Furnish filtering media in filter manufacturer furnished galvanized steel, 16 gage holding frames with a UL Class 2 rating.
3. Filter Gauge:
   a. Filter bank shall be equipped with a 0 to 2 inch W.G. pressure differential gauge connected across each filter media to provide a visual check of the filter loading.
      1) Dwyer Magnehelic.

J. Dampers
1. Dampers shall modulate the volume of outside, return or exhaust air. Dampers shall be double-skin ultra low-leak airfoil design or equivalent with metal compressible jamb seals and extruded blade edge seals on all blades. The dampers shall be rated for a maximum leakage rate of less than 1 percent of nominal airflow at 1 inch wg. Blades shall rotate on stainless steel sleeve bearings. Dampers shall be arranged in opposed blade configuration.

K. Electrical Provisions
1. Mount the main electrical panel directly on the unit or in a service compartment and include motor starters, fused disconnect switches, transformers, and the like.
2. Provide power wiring in conduit from main cabinet through floor and terminate with screwed caps. Install steel sleeves to accommodate conduit entry. Where unit construction is such that wiring must be disconnected for shipment, provide terminal blocks in an accessible enclosure at the sectional points for field wiring.
3. Completely interwire the electrical cabinet and properly wire all connections to the equipment. Extend wiring to properly coded terminal strips with all wires identified with approved marking strips.
4. Provide a factory mounted, 120 volt, weather resistant, UL listed wet location fluorescent light fixture in each section. Fixture shall be complete with junction box, Lexan housing and lens, magnetic ballast and 70 watt bulb. Provide lighting circuit in conduit from main cabinet to a single switch, and GFI weatherproof convenience outlet, mounted on the unit exterior.

2.9 ROOF MOUNTED HEATING AND VENTILATING UNIT (AHU-3 AND AHU-4)

A. General
1. *AHU-3 AND AHU-4 [D]*: Provide factory assembled, packaged, self-contained, factory built air handling units consisting of indicated components including: Complete insulated and weatherproofed housing on a base; dampers; filter section; steam coil heating section; supply fan section; return fan section where indicated; main fusible disconnect switch; variable frequency drives; disconnect switches; transformers. Units shall be arranged for roof top curb mounting.
   a. Trane “Climate Changer” T Series.
   b. TMI.
2. Each unit section shall be shipped complete with all interconnecting piping, wiring, and accessories, necessary for final installation and requiring minimal field terminal

connections. Design and fabricate the units to provide mating of sections with proper structural and service reconnection considerations.

3. Fabricate units of sizes, capacities, and configuration as indicated.

B. Unit panels shall be solid double-wall construction. All exterior wall panels shall be made of galvanized steel. The casing shall be able to withstand up to 1.5 times design static pressure, or 8" WC, whichever is less, with no more than 0.005 inch deflection per inch of panel span. The unit base design shall allow unit to rest on top of roof curb when field installed.

C. Unit shall be factory insulated. Panels and unit roof shall be of double-wall construction with interior and exterior panels and insulation. Panel insulation system shall provide a minimum R value of 12. Insulation shall conform to NFPA 90 requirements.

D. Unit roof shall be constructed of two pieces. Inner roof shall be installed in such a manner as to prevent air bypass between internal components. Outer roof shall be sloped a minimum .25" per foot either from one side of unit to other, or from center to sides of the unit.

E. Access doors shall be constructed with a double-wall of solid G90 galvanized steel interior panel. Automotive style gasketing around the full perimeter of the access door shall be used to prevent air leakage. Door gasketing shall be mounted to the perimeter of the door and shall seal against a raised door frame. Door frame shall channel water away from gasket. Door shall have a protective flange to shield gasket from exposure. Preferred door handle shall not penetrate door casing. Door shall have a single handle latch.

F. Fan Sections

1. Fans shall be double-width, double-inlet, multiblade type as produced by the unit manufacturer. Fan shall be forward curved or backward inclined, as required for stable operation and optimum energy efficiency. Fan shall be equipped with self-aligning, antifriction bearings with an L-50 life of 200,000 hours. Fan performance shall be certified as complying with ARI Standard 430-89.
2. The vibration levels of the complete fan assembly shall be checked and excessive vibration shall be eliminated in the factory. Fan shaft shall be properly sized and protectively coated with lubricating oil. Fan wheels shall be keyed to fan shaft to prevent slipping. Fan shafts shall be solid and designed so that fan shaft does not pass through its first critical speed as the unit comes up to its rated rpm. Fan shafts shall not exceed 75 percent of their first critical speed at any cataloged rpm. Fan shall be provided with an access door on the drive side of the fan.
3. Fan connection shall be isolated from unit casing by a flexible canvas duct. Two-Inch Spring Isolators — Fan and motor assembly shall be internally isolated from the unit casing with 2-inch deflection spring isolators, furnished and installed by the unit manufacturer.

G. Variable Frequency Drives

1. Provide separate electronic variable frequency drives for supply and return air fans. Each unit shall consist of an adjustable frequency controller, three contactor bypass with a key operated drive-off-bypass selector switch, and fusible disconnect switch, complete with

control transformer and control devices as indicated and specified, with all power and control wiring and mounted in a common NEMA 1 enclosure.

2. Include the following features of self-protection and reliable operation:
   a. Pulse Width Modulated Drive w/IGBT transistors
   b. LCD display and keypad
   c. English language electrical values, parameters, self test, faults and diagnostics
   d. Power, pending fault, and fault LED indicator lights
   e. Form C fault contacts
   f. 4-20 mA or 0-10 V speed input signal
   g. Hand-Off-Auto (HOA) selector switch
   h. Current limiting NEMA Class T fuses
   i. Auto restart after momentary power loss
   j. Critical frequency avoidance
   k. Voltage and FLA shall be factory-set for the exact motor used in the air handler

H. Filter Section
1. Filter section shall have filter racks, an access door for filter removal and block-offs as required to prevent air bypass around filters.
2. Provide viscous impingement type filters with filtering media of nominal 2 inch thickness industrial type glass fiber with an initial resistance of no more than 0.28” WG, rated at MERV 7 with face velocity of 500 FPM when tested per ASHRAE Standard 52.2, 1999. Furnish filtering media in filter manufacturer furnished galvanized steel, 16 gage holding frames with a UL Class 2 rating.
3. Filter Gauge:
   a. Filter bank shall be equipped with a 0 to 2 inch W.G. pressure differential gauge connected across each filter media to provide a visual check of the filter loading.
      1) Dwyer Magnehelic.

I. Motorized Damper
1. Dampers shall modulate the volume of outside, return or exhaust air. Dampers shall be double-skin ultra low-leak airfoil design or equivalent with metal compressible jamb seals and extruded blade edge seals on all blades. The dampers shall be rated for a maximum leakage rate of less than 1 percent of nominal airflow at 1 inch wg. Blades shall rotate on stainless steel sleeve bearings. Dampers shall be arranged in opposed blade configuration.

J. Heating Section
1. Steam coils shall be of the nonfreeze inner steam distributing type permitting counter flow of steam and condensate. Outer tubes to be a minimum of 1 inch OD x 0.031 inch wall thickness; inner tubes to be of minimum 5/8 inch OD x 0.031 inch copper. The headers shall be constructed of seamless copper. The casings shall be of minimum 16 gage G-90 galvanized steel with adequate space for expansion and contraction of the coil, flanged and punched for easy mounting in the air handling unit. The coil face velocity shall not exceed 700 FPM. Horizontally mounted steam coils shall have the supply and return connections on one end and shall be limited to a maximum coil length of six feet. The tubes shall be fitted with aluminum extended fins. Plate type fin coils may have tubes mechanically expanded into fins or may be soldered.

2. Where Scheduled on the DRAWINGS, furnish coil complete with face and bypass dampers.
3. Provide extended pipe cabinet for steam and chilled water coil piping.

K. Electrical Provisions
1. Mount the main electrical panel directly on the unit or in a service compartment and include fused disconnect switches, transformers, and the like.
2. Provide power wiring in conduit from main cabinet through floor and terminate with screwed caps. Install steel sleeves to accommodate conduit entry. Where unit construction is such that wiring must be disconnected for shipment, provide terminal blocks in an accessible enclosure at the sectional points for field wiring.
3. Completely interwire the electrical cabinet and properly wire all connections to the equipment. Extend wiring to properly coded terminal strips with all wires identified with approved marking strips.
4. Provide a factory mounted, 120 volt, weather resistant, UL listed wet location fluorescent light fixture in each section. Fixture shall be complete with junction box, Lexan housing and lens, magnetic ballast and 70 watt bulb. Provide lighting circuit in conduit from main cabinet to a single switch, and GFI weatherproof convenience outlet, mounted on the unit exterior.

L. Automatic temperature controls will be field installed as part of the Work furnished under Division 13 Series Sections.

PART 3 EXECUTION

3.1 INSTALLATION

A. General
1. Furnish, install and apply equipment and materials per the manufacturer's published instructions, and approved shop drawings.

B. Lubrication
1. Lubricate equipment and fill lubrication systems per manufacturer's published instructions.
2. Roof Mounted Fans And Hoods

C. Start-Up Service
1. Provide a field engineer for air conditioning units for start-up service for temporary construction use, final inspection and adjustment and instruction of the OWNER'S personnel regarding operation and maintenance of the units. Include labor, materials, travel, per diem and any other costs as part of the "field engineer" work. Provide copies of operation and maintenance manuals as specified.

3.2 FIELD QUALITY CONTROL

A. Test units per manufacturer's published data.

END OF SECTION

Revision History	
Date	**Rev. No.**
A	0
B	0
C	0
D	0
E	0
F	0
02-19-09	0

LMS/djo
Y:\d\timsdatasf\BROOKHAVEN_NATIONAL_LABORATORY\SF070003\200-PROJEXEC\280-SPEC\15700.doc

SECTION 15710

STEAM AND CONDENSATE SPECIALTIES AND EQUIPMENT

PART 1 GENERAL

1.1 SUMMARY

A. Scope
1. Provide labor, materials and equipment to provide the steam and condensate specialties, including accessories as required for a complete installation.

B. Description Of Equipment
1. Silencers
2. Condensate Return Unit
3. Condensate Return Tank and Pumps

C. Related Work Specified Under Other Sections
1. General Mechanical Requirements."
2. Aboveground Piping Systems."
3. Thermal Insulation."
4. Environmental Equipment."

1.2 QUALITY ASSURANCE

A. Requirements Of Regulatory Agencies

B. Manufacturer And Contractor Personnel Qualifications
1. Employ for welding, brazing, soldering and cutting work, qualified personnel as defined by specified code and certified by the National Weld Test Bureau, the Hartford Steam Boiler and Inspection Company or other approved bureau or agency.
2. Manufacturers' field representatives shall be technically qualified personnel who are regularly employed by the respective manufacturers for the task for which their participation is specified.

1.3 SUBMITTALS

A. Refer to Division 15 Section "General Mechanical Requirements" for applicable requirements.

B. Include noise level data for steam PRV valves and sound attenuation data for supplementary sound control provisions. Submit valve data for approval on valve manufacturer's Application-Engineering Data Form. Include recommended installation details for proposed valves where they deviate from installation details indicated.

C. Sequentially list traps by "ST" prefix with a tabulation of model number, body pressure rating, inlet pressure, back pressure, "lock-up" pressure, normal condensing rate, actual continuous

condensing rate, safety factor, lift in feet, orifice size, and trap location. See "STEAM TRAPS".

D. For condensate pumping equipment include curves, selection points, impeller diameters, cuts, statements, calculation and data sheets required to verify or clarify conformance to requirements.

E. Submit complete shop drawings for attachment of supporting elements to building structure if supporting elements are other than the specified commercially available types.

F. Submit integrated electrical drawings indicating power, control and instrument wiring interfacing with work under separate contracts for field work as well as factory assembled work. Manufacturer's electrical drawings are acceptable only when modified and supplemented to exactly reflect CONTRACT conditions. The system of drawings shall include: Overall schematic (elementary) diagram of the entire system of power circuitry detailing the number of and the wire and conduit sizes; wiring diagrams showing terminations of interconnecting conductors between component assemblies, systems, control devices, and control panels complete with conductor identification, number of conductors, conductor and conduit size of interconnections; sequence of operation for components, assemblies or systems.

G. Test reports: Submit copies of certified test data.

1.4 RECORD DOCUMENTS

A. Refer to Division 15 Section "General Mechanical Requirements" for applicable requirements.

1.5 OPERATION AND MAINTENANCE DATA

A. Refer to Division 15 Section "General Mechanical Requirements" for applicable requirements.

PART 2 PRODUCTS

2.1 PIPING MATERIALS

A. Piping materials and fittings: Refer to Division 15 Section "Aboveground Piping Systems."

B. Special service valves: Refer to Division 15 Section "Valves."

2.2 PIPING SPECIALTIES

A. General
   1. Refer to Division 15 Section "Piping Specialties" for additional applicable piping specialties.

B. Vacuum Breakers (Steam)
   1. Vacuum breakers: Stainless steel ball and spring, threaded outlet, rated for 365°F, at 25 psig. Provide with isolating valve on inlet side. Size as indicated on the DRAWINGS.
      a. Johnson VB8.
      b. Crane.
      c. Hoffman.

C. Thermostatic Air Vent
   1. Thermostatic air vent: Rate for the temperatures, pressures and service to be encountered. Provide with isolating valve on inlet side.
      a. Spirax/Sarco AV13.
      b. Other approved.

D. Silencers
   1. *Silencers or noise suppressors [D]*: Provide in discharge of steam pressure reducing valves where pressure reducing valves furnished do not meet noise criteria, provide. Furnish expanded outlet type with internal construction consisting of energy absorbing slots and vanes. Submit valve data for approval on valve manufacturer's Application-Engineering Data Forms.
      a. Leslie.
      b. Spence.

E. Drip Pan Elbows
   1. *Drip pan elbows [D]*: Provide cast iron drip pan elbows at steam relief valves.
      a. Consolidated (Manning, Maxwell and Moore) Type 1665.

F. Steam Traps
   1. Provide thermodynamic traps for high pressure steam mains and F&T traps for low pressure steam mains and branches at: Low points; ahead of riser; end of mains; 300-foot maximum intervals in straight pipe. For air heating coils and hot water convertors, furnish F&T traps.
   2. Size steam main, branch and riser traps for not less than 3 times actual condensing rate normal to the system.
   3. TYPE F & T - Float and thermostatic trap: With AISI Type 300 Series stainless steel heliarc welded floats and operating mechanism and hardened 13% chrome stainless steel seat and valve. Balanced pressure type thermostatic element with stainless steel caged corrosion resistant alloy bellows charged with a fluid suitable for service with condensate pH of 6.0. Traps shall permit removal and replacement of operating and wearing parts without disturbing piping connections to trap body. Shield bellows from direct blast of steam and condensate. Fit body with drain plug.
      a. Spirax Sarco.
      b. TLV.

4. Thermodynamic type trap shall be in-line renewable zero steam loss disc type, having stainless steel body and trim, with threaded end connections. Trap shall have replaceable capsule. Trap shall have an integral strainer, stainless steel strainer screen, and integral blowdown valve.
    a. Yarway 721.

G. Moisture Separator
1. ANSI B 16.5 Class 150 flanged carbon steel baffle type moisture separator with threaded drain and air vent, and one piece high temperature insulation jacket with strap and buckle fasteners, silicone rubber coated glass fiber inner and outer facing, polyester stitching and nylon draw cords.
    a. Spirax Sarco, Type S5 with IJ-S5 Jacket.

H. Steam Pressure Reducing Stations
1. *Pressure reducing stations [D]*: Provide each pressure reduction stage with pressure reducing valve, valved bypass, strainer and pressure gage on up-stream side. Provide relief valve and pressure gage on downstream side. Rate the first valve downstream of the pressure reducing valve with the same pressure rating as the upstream valve. Furnish bypass globe valve around each pressure reduction stage, fitted with 500 Brinell seat and disc. Valve size shall be approximately as large as pressure reducing valve orifice. Piping downstream of station inlet shutoff valve and upstream of station outlet valve shall be Schedule 80. Other reducing station piping shall be system standard pipe.
2. Noise control accessories: Pressure reducing valves shall preclude noise levels exceeding 80 dBA measured 4 feet downstream of valve and 3 feet from pipe. The CONTRACTOR shall be responsible for sound attenuation necessary to obtain specified noise criteria. The required diffusers, silencers and other supplementary noise control provisions to comply with specified noise criteria, shall be the responsibility of the CONTRACTOR, who shall determine the extent of “acoustical lagging” required, upstream and downstream of the PRV. Approved modifications to piping shown on DRAWINGS, necessary to accommodate sound attenuation provisions, shall be provided.
3. *Pressure Reducing Valve [D]*: Self operated, direct piston balanced type with AISI Type 420 stainless steel plug and AISI Type 410 stainless steel, stellited seat rings capable of 100 : 1 turndown.on flow.
    a. Spence, Type E.
4. *Pressure Regulator Pilot [D]*: 250 db. Class, cast ironl
    a. Pressure Reduction for first and second stage: Spence Type D.

I. Pressure Safety Valves – Steam (PSV)
1. *TYPE PSV [D]*: Spring loaded single disc type with bronze body and disc, side outlet and lifting lever with MPT inlet per ASME Code, with stamp, for a maximum service of 250 PSIG saturated steam. Safety relief valve shall be submitted together with the first and second stage PRV’s as a single submittal.
    a. Spence, Model 41.
    b. Consolidated Div. of Dresser Industries.
    c. O.C. Keckley Co.
    d. Kunkle.

e. Nicholson.

2.3 EQUIPMENT

A. Condensate Return Unit
1. *Condensate return unit [D]*: Centrifugal, duplex type unit with pumps vertically mounted below 24 inches, receiver, mechanical alternator and 3-position control switch to automatically transfer the operation from one pump to the other, and to operate both pumps in the event of abnormal conditions. Pumps designed to operate at 209 degF without vapor binding and without cavitation under all system operating conditions. If cavitation occurs replacement of entire pump assembly is required.
2. *Flow control valve [D]*: Provide equivalent to Griswold and Hart valve, and nonslam check valve at discharge of each pump.
3. *Receivers [D]*: Of cast iron or steel with control panel, starters, a mechanical alternator, float switch, seamless copper float, gauge glass and strainer on the return inlet. Furnish receiver for an internal pressure of 25 PSI sized for indicated storage capacity.
   a. Domestic Pump Company, Type CBE.
   b. Roth Pump Co.

PART 3 EXECUTION

3.1 EQUIPMENT INSTALLATION

A. Drip Pan Elbows
1. Run drains from pan to hub outlet or floor drains. Run vent through roof. Drip pan elbows shall not carry weight of discharge piping.

B. Condensate Return Unit
1. Install unit per manufacturer's instructions.
2. Perform start-up, adjustment of equipment and calibration of controls per manufacturer's instructions to verify a complete, properly functioning, installation with capacity as scheduled.

3.2 EQUIPMENT TESTING

A. Demonstrate satisfactory performance of equipment to the ARCHITECT-ENGINEER. Demonstrate correct functioning of controls.

END OF SECTION

Revision History	
Date	**Rev. No.**
E	0
F	0
02-19-09	0

LMS/djo
Y:\d\timsdatasf\BROOKHAVEN_NATIONAL_LABORATORY\SF070003\200-PROJEXEC\280-SPEC\15710.doc

SECTION 15770

ATMOSPHERIC COOLING EQUIPMENT

PART 1 GENERAL

1.1 SUMMARY

A. DESCRIPTION OF EQUIPMENT
1. Provide labor, materials and equipment necessary to furnish the indicated cooling tower, including accessories as required for a complete, properly functioning, installation.
2. Provide work specified herein per governing ordinances, codes, laws and regulations.

B. Related Work Specified Under Other Sections
1. General Mechanical Requirement - SECTION 15050.
2. Aboveground Piping Systems - SECTION 15105.
3. Electrical Work - 16000 Series SECTIONS

1.2 QUALITY ASSURANCE

A. Requirements Of Regulatory Agencies
1. Materials and equipment shall be provided and work shall be executed, tested and inspected per applicable provisions of Federal, State and Local Government laws and ordinances and referenced codes and standards. Governing laws, ordinances, codes and standards constitute minimum requirements and strict compliance therewith is required, except more stringent requirements of the CONTRACT DOCUMENTS shall modify, supplement and supersede applicable portions of governing laws, ordinances, codes and standards.

B. Design Criteria
1. Motor nameplate horsepower shall exceed the required brake horsepower at any point on the fan curve at maximum pitch.

1.3 SUBMITTALS

A. Shop Drawings And Product Data, Etc.
1. Furnish submittals for items that are identified in this SECTION by a different typeface and a bracketed code (e.g., *Item [L]*). Refer to SECTION 01340 for definition of codes for types of submittals and the administrative requirements governing submittal procedure. Additional submittal requirements pertaining to this SECTION are specified herein under this Article.
2. Furnish the following drawings:
a. Plan and elevation views showing dimensions and details required for interfacing, installation, including anchor bolt locations and total weight of unit for each atmospheric cooling system assembly.

b. Selected views as required to describe accessories and show required connections and dimensions.
c. Electrical system and instrumentation connections.
d. Piping system connections.
e. Fan performance curves.

3. Submit pertinent data on CTI Inquiry and Bid Form Standard 181-1 through 181-4 or the manufacturer's equivalent form. In addition to fan performance curves and the following required information, include supplemental verification of proposed component or construction compliance with the CONTRACT DOCUMENTS:
   a. Brake horsepower required for maximum fan pitch setting — BHP/ degrees
   b. Fan pitch setting for project cap. conditions — degrees
   c. Fan first critical speed — RPM
   d. Fan deck live load — PSF max.
   e. Tower weight
      1) dry — lb.
      2) flooded — lb.
4. Include equipment and system characteristics and performance, sizes, calculations coefficients used, catalogue data and other data necessary to verify compliance CONTRACT DOCUMENTS.
5. *Test Reports [T]*: Submit performance data.

1.4 RECORD DOCUMENTS

A. Submit as-built drawings and progress points per SECTION 01720.

1.5 OPERATION AND MAINTENANCE DATA

A. Submit, per SECTION 01730, operating and maintenance data, special tools and spare parts list.

1.6 DELIVERY OF MATERIALS

A. Upon completion, assembly, and testing by the manufacturer of the equipment specified, if it is found necessary for shipping and/or installation purposes to disassemble, parts shall be match-marked to facilitate erection in the field. Units shall be braced and packed for shipping to prevent breakage or distortion while in transit.

B. Crates, boxes, and cartons shall be clearly marked to identify the equipment. Shipping invoices shall show the crate, box, or carton identification number.

PART 2 PRODUCTS

2.1 INDUCED DRAFT, CROSSFLOW COOLING TOWER

A. General

1. *Induced draft, crossflow cooling tower [D]*: Induced mechanical draft, vertical discharge, cross-flow, factory assembled cooling tower, constructed of noncombustible materials throughout. Cooling tower performance shall be tested and certified in accordance with CTI Standard 201. Each cooling tower cell shall cool 3,750 gpm from 100°F to 90°F under extreme wet bulb temperatures up to 84.5°F.
   a. Baltimore Aircoil Co., Series 3000
   b. Marley, NC Series

B. Construction

1. Design structure of predrilled, through-bolted, steel members with diagonal bracing, and horizontal ties in both directions. Design columns, stringers, bracing, accessory supports and mechanical connections to withstand maximum stresses imposed. Design and construct steel members per AISC Specifications for the Design, Fabrication and Erection of Structural Steel for Buildings and the AISI Light Gage Cold Formed Steel Structural Members.
   a. Manufacturer's standard completely enclosed gravity type hot water distribution system.
   b. Provide an FM approved noncombustible inorganic honeycomb fill, with louvers formed as part of each fill sheet, fabricated of minimum 3/4-inch honeycomb construction polyvinyl chloride (PVC) impervious to rot, decay, fungus or biological attack and have a flame spread rating of 5 or less per ASTM E84-77a. Material shall be structurally stable under loads imposed over the service temperature range, including thermal shock and icing. Continuously support fill, and replace cracked or otherwise damaged fill. Construct fill in units providing removal for inspection, cleaning, or replacement.
   c. Provide eliminators formed from polyvinyl chloride (PVC), impervious to rot, decay fungus or biological attack and have a flame spread rating of 5 or less per ASTM E84-77a. Assemble eliminators in removable racks. Eliminators shall limit drift loss to less than 0.005% of the design circulating flow rate.
   d. Provide casing constructed with galvanized steel panels. Tower shall be suitable for applications requiring anchorage up to wind loads of 30 psf.
   e. Furnish a factory fabricated, welded, rigid basin structure of not less than 12 gage AISI Series 300 stainless steel with overflow provisions, screen and outlet location as noted on the drawings. Where multiple cells are shown to be located adjacent to each other, provide connections for direct inter-connection of tower basins. Design and construct basin to accommodate loads of indicated support elements.
   f. Furnish fan stacks of manufacturer's standard corrosion resistant material and fit with screens.
   g. Hot water distribution system: Manufacturer's standard completely enclosed spray nozzle or serrated edge trough type. Nozzles: Mechanically attached nonclogging

nonferrous metal. Hot water distribution basin shall be constructed of heavy gage dot-dip galvanized steel.

2. *Fans [D]*: Furnish airfoil twisted taper adjustable pitch blades, constructed of solid aluminum alloy. Corrosion protect hub and furnish with anti-recirculation hub cover. Statically and dynamically balance fan at the factory. Fan performance curves shall accompany shop drawing submittal.
3. *Gear Reducer [D]*: Provide close-coupled motor to gear reducer.
4. *Motor [D,P]*: Per SECTION 15010 shall be premium efficiency, totally enclosed fan cooled with 120 volts AC resistance heaters and enclosure drain, suitable for use with variable frequency drive per NEMA MG1, Part 31, Definite Purpose Inverter-Fed Motors. At time of acceptance tests, perform motor horsepower measurement with calibrated wattmeter or power analyzer furnished by the CONTRACTOR. Motor nameplate horsepower shall exceed brake horsepower required at any point on the fan curve at maximum pitch.
5. *Vibration [D]*: Vibration switch shall shut off power to driver in case of excessive vibration in gear and fan assembly. Switch shall be manufacturer's standard, manually resettable type.
6. Sound level: The sound pressure level with unit in full operation shall not exceed 80 dBA measured at any point 50 feet from the major surfaces of the cooling tower at a height of 3 to 5 feet above the supporting surface.
7. Access provisions: Design and construct cooling tower to provide access for maintenance servicing and repair. This requirement includes inspection plates and panels, access doors, ladders, landings or platforms, catwalks and similar devices. Tower safety provisions for openings, railings, platforms and ladders per ANSI A12.1. Provide heavy-duty metal guards or enclosures per ANSI B15.1. Provide steel pipe perimeter hand rail and knee rail on fan deck of tower. Provide OSHA compliant steel ladder, man-access doors, and walkways to tower interior.
8. Hardware: Regular bolting, anchor bolting, weldments, and fasteners shall be of AISI 300 series stainless steel.
9. Corrosion protection: Hot-dip or mill galvanize ferrous materials used in the construction of any portion of the cooling tower or supporting member. Design and fabricate components to preclude field drilling or cutting during assembly. Fabricate hot-dip galvanized materials per ASTM A 384, ASTM A 385, and ASTM A525 with coating Designation G-165 or G-90 plus an approved proprietary corrosion protective coating. Gray iron castings shall be heat treated if used. Solvent clean or vapor degrease zinc-coated steel surfaces to be painted or coated to remove grease, oil, dirt, and other foreign matter. Field repair damaged galvanized surfaces with inorganic zinc rich coating.
   a. Amerion "EZ".
   b. Ceilcote.
   c. Carboline.

2.2 COOLING TOWER REMOTE BASIN HEATER

A. *Over the side basin heater [D]*: One controller shall control two heaters. Each heater shall be 7'-0" long and 8kW. Set point shall be 45F. Provide UL listed, AISI Type 304 stainless steel, welded construction, over the side electric immersion heaters as indicated with liquid proof

NEMA 4 outlet box, reinforced riser, extension arm, 250°C rated high temperature lead wire, low water cutout probe, and large diameter heating elements. Unit shall be rated for 250°F operating temperature. Furnish units complete with UL listed control panel housed in NEMA 4X enclosure with 23 feet of direct immersion rated cord, probe set transformer, printed circuit board, and 50 amp, 3 pole, contactor. Units shall accept a single 480v, 3ph, 60HZ power feed as part of Div. 16 Series Sections Work.

1. INDEECO, Model 762U heater with Model 874Z-Series control panel.
2. Other approved.

PART 3 EXECUTION

3.1 FIELD QUALITY CONTROL

A. CHECK, TEST AND START-UP

1. Provide all labor and materials for equipment check out and testing by a factory trained and authorized representative of the cooling tower manufacturer prior to starting the machine. Upon successful check out and testing, tower shall be started under the supervision of the manufacturer's field representative. The report of check, test and start-up shall be documented and certified in writing on the manufacturer's standard forms.

B. INSTALLATION AND RUN-IN

1. Installation and related work will be performed under other contracts, under the direction of an authorized representative of the manufacturer.
2. Start-up and run-in shall be performed under the direction of an authorized representative of the manufacturer who shall inspect, make critical adjustments of equipment and calibration of controls, to verify a complete, properly functioning installation.

C. TEST

1. Should the OWNER request testing to determine compliance with performance requirements, the costs of testing shall be borne by:
   a. The OWNER, if compliance is demonstrated by the tests.
   b. The Manufacturer, if testing indicates failure to fully comply with performance requirements of the CONTRACT DOCUMENTS.
2. The test procedures of ASME Power Test Code PTC 23 11 be used in determining compliance with the CONTRACT DOCUMENTS performance requirements. If testing or retesting of the cooling tower furnished under this CONTRACT indicates failure to meet the performance requirements of the CONTRACT DOCUMENTS, the Manufacturer shall be responsible for whatever additions, modifications or replacements necessary to provide the OWNER with a cooling tower which conforms to these performance requirements. Schedule repair work at a time convenient to the facility being served.

END OF SECTION

Revision History	
Date	**Rev. No.**
A	0
B	0
C	0
D	0
E	0
F	0
02-19-09	0

LMS/djo
Y:\d\timsdatasf\BROOKHAVEN_NATIONAL_LABORATORY\SF070003\200-PROJEXEC\280-SPEC\15770.doc

SECTION 15800

AIR DISTRIBUTION AND EXHAUST

PART 1 GENERAL

1.1 SUMMARY

A. Scope
   1. Provide labor, materials and equipment to provide air distribution and exhaust systems, including accessories as necessary to provide properly functioning installations.

B. Description Of Systems
   1. ABOVEGROUND SYSTEMS
      a. Galvanized sheet metal ductwork, 2” WG, positive or negative, except as otherwise indicated on the DRAWINGS, minimum Seal Class B, per SMACNA HVAC Duct Construction Standards.
      b. Aluminum sheet metal ductwork, 2” WG, positive or negative, except as otherwise indicated on the DRAWINGS, minimum Seal Class B, per SMACNA HVAC Duct Construction Standards.
      c. Acoustically lined galvanized sheet metal ductwork, 2” WG positive or negative, except as otherwise indicated on the DRAWINGS, minimum Seal Class B, per SMACNA HVAC Duct Construction Standards.

C. Related Work Specified Under Other Sections
   1. Division 13 Section “Environmental Systems Control.” including duct probe access fittings.
   2. Division 15 Section “General Mechanical Requirements.”
   3. Division 15 Section “Environmental Equipment.”
   4. Division 15 Section “Testing and Balancing”.
   5. Division 16 Sections “Electrical Work.”

1.2 QUALITY ASSURANCE

A. Reference Standards
   1. Standards of SMACNA:
      a. HVAC Duct Construction Standards (DCS), Second Edition, 1995.
      b. Manager’s Guide for Welding.
      c. Testing, Balancing and Adjusting of Environmental Systems.
   2. NFPA 90A, Air Conditioning & Ventilating Systems.
   3. NFPA 91, Blower & Exhaust Systems.
   4. ACCA, Air Conditioning Contractor’s Association.
   5. ACGIH “Manual of Recommended Practice for Industrial Ventilation”.
   6. ADC, Air Diffusing Council.
   7. ASHRAE Fundamentals Handbook and Product Directory.
   8. AISI, American Iron and Steel Institute.

9. ANSI, American National Standards Institute.
10. ASTM, American Society for Testing and Materials.
11. AWS, American Welding Society.
12. FS, Federal Specifications.
13. NBS, National Bureau of Standards.
14. Wherever the words “should”, “recommended”, “it is recommended”, “preferred” or “must” appear in the text of the referenced standards, interpret them as the word “shall”, to indicate mandatory conformance. Where the words “can” and “may” are similarly used in conjunction with an option which would result in superior quality or strength construction, interpret them as “shall”.

1.3 SUBMITTALS

A. Refer to Division 15 Section “General Mechanical Requirements” for applicable requirements.

B. Submit shop drawings of ductwork and plenums. Show details of joint construction, supports, reinforcement, access doors, fitting configuration and accessory installation for construction where these are field conditions or specified options.

C. Submit a schedule of proposed air diffusion devices, indicating type, location, air quantity, neck or jet velocity, pressure drop, throw and diffusion range. Identify air diffusion devices using CONTRACT DRAWING DESIGNATIONS. Include sound data for supply air diffusion devices in terms of sound power level in octave bands 2 through 8, and NC Index for the capacity range of the device. Where no room attenuation is indicated, 8 dB shall be assumed. Where no noise criteria data is indicated, NC-40 shall be assumed.

D. Furnish data regarding loads and forces imposed on building structure by proposed work sufficiently in advance of the required work to permit analysis of structure for proposed loads and forces.

E. *Test report [R]*: Submit test reports of each system as described under FIELD QUALITY CONTROL.

PART 2 PRODUCTS

2.1 DUCTWORK MATERIALS

A. Sheet Metal - Galvanized

1. Sheet Metal: Mill galvanized steel of lock forming quality per ASTM A 653/A 653M; Coating Designation G-90 (Z275).

2. Reinforcing and Supports: Structural steel per ASTM A 36; Mill galvanized per ASTM A 123. Fabricated sheet steel per ASTM A 653/A 653M, Coating Designation G-90 (Z275). Equivalent, proprietary design rolled steel structural support systems may be used in lieu of mill rolled structural steel.
3. Bolts and Fasteners: Carbon steel; zinc coated per ASTM A 153.
4. Gaskets: Chloroprene elastomer, 40 Durometer, 1/8 inch thick, full face, one piece vulcanized or dovetailed at joints.

B. Sheet Metal - Aluminum
1. Sheet Metal: Aluminum alloy per ASTM B 209, Alloy 3003, Temper H-14.
2. Reinforcing and Supports: Mill extruded aluminum shapes conforming to ASTM B 221 or galvanized steel shapes per ASTM A 36 and mill galvanized per ASTM A 123.
3. Gaskets: Chloroprene elastomer, 40 Durometer, 1/8 inch thick, full face, one piece vulcanized or dovetailed at joints.

C. Sheet Metal - Galvanized Spiral
1. Duct and fittings: Galvanized sheet steel lock forming quality per ASTM A 653, Coating Designation G-90, factory fabricated, lock seam or welded design per SMACNA (HVAC Construction Standards)(Round Industrial Duct Constructions Standards)(Rectangular Industrial Duct Constructions Standards).
   a. United McGill Corp.
   b. Semco Mfg. Co.

D. Brazing Materials
1. Silicon bronze: Per AWS A5.6 or A5.7.

E. Welding Materials
1. Welding materials: Refer to SMACNA “Manager’s Guide for Welding” for applicable requirements.

F. Packing
1. Mineral fiber: Per FS HH-I-558, Form B, Class 8.

G. Caulk
1. Elastomer caulk: UL Listed and per NFPA 90A.
   a. Benjamin Foster No. 30-02.
   b. McGill “Duct Sealer”, Div. of United McGill Corp.
   c. Miracle Adhesives Corp. “Miracle D615”.

H. Inorganic Zinc Rich Paint
   1. *Inorganic zinc rich paint [P]*:
      a. Carboline, “Carbo-Zinc”.
      b. Tnemec.
      c. Koppers.

2.2 DUCTWORK SPECIALTIES

A. Acoustic Lining
   1. Duct Acoustic Lining: Provide acoustic lining, per SMACNA HVAC Duct Construction Standards, in sheet metal ductwork where indicated. Minimum 1 inch thickness, except as otherwise indicated on DRAWINGS. Increase size of ductwork to maintain original inside design dimensions. Density of the insulation including surface coating or facing shall be minimum 1.5 pounds per cubic foot, maximum 2 pounds per cubic foot. Liner shall be impregnated on the surface exposed to air stream per ASTM C 1071 and NFPA 90A. Air stream side of the liner shall withstand air velocities of 4000 FPM without delamination or erosion.

	DENSITY, PCF
a. Owens-Corning “Quiet R” (Flexible).	2
b. Manville “Linacoustic” (Flexible).	1-1/2
c. Certainteed Corp. “Ultralite” (flexible).	1-1/2 or 2
d. Knauf Duct Liner M (Flexible).	1-1/2

B. Acoustic Lining Accessories
   1. *Adhesive [P]*:
      a. Foster 85-00.
      b. Insul-Coustic Div., Berma Products Corp.
      c. Vimasco Corp.
   2. *Sealants and edge sealing mastic [P]*:
      a. Foster 40-10.
      b. Insul-Coustic Div., Berma Products Corp.
      c. Vimasco Corp.
   3. Mechanical fasteners: Per (HVAC Duct Construction Standards)(Round Industrial Duct Constructions Standards)(Rectangular Industrial Duct Constructions Standards).

C. Duct Probe Access
   1. Duct probe access: Provide plugs with threaded or twist-on cap fittings.
   2. Duct probe access fittings will be provided as part of the WORK under another CONTRACT.

D. Flexible Connectors - For Indoor Use
   1. *Fabric [P]*: UL Listed and conforming to NFPA 90A, 30 ounce, waterproof and non-combustible, air-tight, glass fabric double coated with fire-retardant polychloroprene. Minimum clear width, not including clamping section, shall be 6 inches.
      a. Ventfabrics, Inc., “Ventglas”.

E. Flexible Duct
   1. Flexible duct connectors: Rated and tested under UL-181 Class 1 Material, and comply with NFPA 90A. Maximum length shall be 5 feet unless otherwise indicated.
   2. Galvanized spring steel or aluminum spiral helix and glass cloth duct: Insulated with fibrous glass and vapor barrier jacketing to provide a C factor of 0.23. Working pressure 1-1/2" WG. Diameter as indicated.
      a. Owens-Corning "Fiberglas" INL-25.
      b. Flexmaster Type 5.

F. Flexible Duct Fittings
   1. *Flexible duct fittings [D]*: Galvanized steel, twist-in design with damper. Size as indicated.
      a. Clevaflex, Spin-Collar.
      b. Flexmaster Type FLDE.

G. Manual Dampers Up To 2" WG
   1. *Balancing dampers [P]*: Butterfly, or multi-blade type per SMACNA HVAC Duct Construction Standards and as specified, to balance each respective main and branch duct under operating conditions encountered.
      a. Round Ducts: Provide single blade type for sizes up to 12" dia., and multiblade type for sizes 13" dia. thru 50" dia.
      b. Rectangular Ducts: Provide single blade type for sizes 6" width x 4" height thru 12" width x 10" height, and multiblade type for sizes 12" width x 12" height and larger.
         1) American Warming & Ventilating, Inc., Model VC.
         2) Pottorff.
         3) Ruskin, Model MD35.
         4) C.E. Sparrow Co.
   2. Indicating quadrant regulator: Equip dampers with regulator with an external locking feature adjustment. Where damper rod lengths exceed 30 inches, furnish a regulator at each end of damper shaft which shall have two end bearings. For insulated ductwork regulators shall have elevated dial above insulation thickness.
      a. Ventfabrics Inc.
      b. Young Regulator Co.
      c. American Warming & Ventilating, Inc.
   3. *Damper rod and end bearings [P]*: For dampers.
      a. Ventfabrics, Inc., "Ventlok No. 607".
      b. Young Regulator Co.
      c. American Warming & Ventilating, Inc.
   4. *Regulator [P]*: Concealed for dampers regulated through ceilings, box mounted in ceiling with plain cover.
      a. Ventfabrics, Inc. "Ventlok No. 666".
      b. Young Regulator Co.
      c. American Warming & Ventilating, Inc.
   5. Where ceiling is removable construction, install regulators above ceiling, and mark location on ceiling in a manner approved by the ARCHITECT-ENGINEER.
   6. Make splitter damper minimum sheet metal gage two gage numbers heavier than duct in which installed, i.e., 20 gage splitter in 22 gage duct, up to 16 gage maximum. Make

hinges full length piano type of 1/8 inch thick door type. Make minimum gage of balancing damper sheet metal equal to: Up to 18 inch blade length parallel to pivot rod - 20 gage; 19 to 48 inches blade length parallel to pivot rod - 16 gage. Verify duct gage before fabrication. Furnish full length damper shaft which extends beyond damper blade. Use 3/8 inch square shaft for damper lengths 21 inches and larger. To prevent damper vibration or slippage, furnish adjustable support rods at damper blade end with locking provisions for installation external to duct.

H. Pressure Relief Damper
   1. *Pressure relief damper [P]*: Counterbalanced or spring-loaded damper with blades linked together to open at indicated preset pressure.
      a. American Warming and Ventilating Co.
      b. Ruskin Mfg. Co.

I. Pressure Relief Access Door
   1. *Round duct type access section [P]*:
      a. United McGill Corp. Type AR-W.

J. Access Doors
   1. Duct access door: Construct per (HVAC Duct Construction Standards)(Round Industrial Duct Constructions Standards)(Rectangular Industrial Duct Constructions Standards), minimum size 10 x 16 inches unless otherwise precluded by duct dimensions. Insulated doors shall be double panel type.
   2. Commercial equivalent doors: May be used on approval of proposed product samples.
      a. Air Balance Inc.
      b. American Warming and Ventilating Inc.

K. Gravity Backdraft And Relief Dampers
   1. *Frame [P]*: Construct of not less than 1-1/2 by 4 inch reinforced 16 gage galvanized carbon steel. Mount frames and mullions in place and seal with elastomer calking. Fabricate blades with maximum width of 9 inches and maximum length 36 inches. Blade material 16 gage galvanized steel, 14 B & S gage 6063 or 5052 alloy aluminum or 18 gage AISI 18-8 stainless steel. Furnish blades with mechanically retained seals and 90 degree limit stops.
      a. American Warming and Ventilating Inc.
      b. Ruskin Mfg. Co.
   2. *Counterbalanced dampers [P]*: With blades linked together to open not less than 30 degrees on 0.05” WG differential pressure. Furnish shaft bearings of graphite impregnated nylon or oil impregnated bronze. Equip dampers with fixed and adjustable counterbalancing weights.
      a. American Warming and Ventilating Inc.
      b. Ruskin Mfg. Co.

L. Fire Dampers And Wall Sleeves (Collars)
   1. *Parallel blade type fire dampers [P]*: Constructed and labeled per, UL 555 Class "B" rating. For link loads in excess of 20 pounds, furnish UL Listed quartzoid links. Fabricate operating element for housing external to air stream. Fabricate wall collars per UL 555.
      a. Ruskin Mfg. Co. Model FD-35 Series.
      b. Air Balance Inc.
      c. Pottorf.
   2. *UL Labeled curtain type fire damper* Constructed and labeled per, UL 555 *[P]*: Store curtain out of air stream.
      a. Air Balance, Inc. Type B.
      b. Ruskin Mfg. Co. Model IBD-2 Style B.
      c. Pottorf.
      d. Air Balance, Inc. Type B.
      e. Ruskin Mfg. Co. Model IBD-2 Style B.
      f. Air Balance, Inc. Type A.
      g. Ruskin Mfg. Co. Model IBD-2 Style A.
      h. Pottorf.
      i. Air Balance, Inc. Type C.
      j. Ruskin Mfg. Co. Model IBD-2 Style C.
      k. Pottorf.

M. Automatic (Power Operated) Dampers
   1. Automatic dampers: Except where integral with packaged units furnished as specified in 13800 Series SECTIONS for installation as part of the WORK of this SECTION.

N. Smoke Dampers
   1. Smoke dampers: Furnished as specified in Division 13 Series SECTIONS for installation as part of the WORK of this SECTION.

O. Turning Vanes For Right Angle Elbows And Branch Tees
   1. Turning vanes shall be provided in all right angle elbows and branch tees. Turning vanes shall be factory fabricated, true airfoil design with smoothly rounded entry nose and extended trailing edge, mounted on pre-punched sidepieces of the same make as the vanes proper. Spacing of vanes shall be as defined by sidepiece punching but in no case shall spacing exceed 2-1/2 inches. Single sheet-turning vanes and shop-fabricated turning vanes are prohibited.
   2. Where right angle elbows have an outlet size dimension different from inlet size or a branch tee fitting has unequal outlets requiring the turning vane assembly to be installed in duct fitting at an angle other than 45 degrees, sidepieces of split rail design shall be provided to permit adjusting vanes to required airflow configuration.
      a. Aero/Dyne Company H-E-P.

P. Short Radius Elbows (Rectangular Duct)
   1. Wherever obstructions necessitate a throat radius which is less than duct width and air velocity exceeds 1000 FPM fabricate splitter vanes as smooth single elements per SMACNA HVAC DUCT CONSTRUCTION STANDARDS Fig. 2-6.

Q. Air Diffusion Devices

1. General Terminal air diffusion devices have been chosen in terms of specific air distribution requirements, spacing, and sound characteristics. Provide ADC certified manufacturer's standard devices.
    a. Provide plaster frames for units installed in plaster ceilings.
    b. Provide gaskets for supply terminal air devices mounted in finished surfaces.
    c. Install wall mounted supply registers 6 inches below ceiling unless otherwise indicated.
    d. Provide aluminum air diffusion devices with anodized exposed-to-view surfaces. Provide steel air diffusion devices with specified finish. Where aluminum components are mixed with steel components, finish shall be as specified for steel air diffusion devices. Finish and color shall be as selected by the ARCHITECT-ENGINEER. Provide air diffusion device interior surfaces, including blank-offs, with black matte finish.
    e. Provide supply diffusers with damper and equalizing grid. Damper shall be extracting splitter type unless otherwise specified.
    f. Air volume and pattern adjustments shall be made from the face of the device.
2. *Diffusers [P]*: Provide the following:
    a. Type SD-1: Supply diffuser, aluminum, square pattern and square neck with inner core assembly consisting of fixed deflection louvers with horizontal discharge pattern as indicated, adjustable vanes to provide full vertical to horizontal projection, combination damper and equalizing grid, and white baked enamel exterior surface finish.
        1) Titus Model TDCA-AA.
        2) Anemostat.
        3) Krueger.
        4) Price.
3. *Registers [P]*: Provide the following:
    a. Type SR-1: Supply air register, prime coated, pressed steel with opposed blade dampers. Units constructed as double deflection type, with adjustable face bars parallel to short dimension, opposed blade dampers, adjustable by key or lever from face.
        1) Titus Model 300-RS-S.
        2) Anemostat.
        3) Krueger.
        4) Price.
4. *Grilles [P]*: Provide the following:
    a. Type RG-1: Same as specified for SD-1, except opposed blade damper and adjustable vanes are not required.
    b. Type RG-2: Steel, return grille, fixed face bars with baked, off-white enamel finish. Provide unit with fixed horizontal face bars set at an angle of approximately 45 degrees down and parallel to long dimension.
        1) Titus Series Model 350RL.
        2) Anemostat.
        3) Krueger.
        4) Price.

2.3 DUCT SUPPORTS

A. Refer to Article “DUCT AND EQUIPMENT SUPPORT SYSTEM”.

PART 3 EXECUTION

3.1 DUCTWORK FABRICATION

A. Fabricate sheet metal construction per “REFERENCED STANDARDS”, except as modified and supplemented by this SPECIFICATION.

B. Fabricate ductwork to prevent failure under pressure or vacuum created by fast closure of ductwork devices. Provide leaktight automatic relief devices where indicated.

C. Fabricate necessary offsets and transformations to avoid interference with the building construction, piping, or equipment. Make easements (streamliners) for duct obstructions per SMACNA HVAC Duct Construction Standards.

D. Where ducts pass through walls and floors, finish wall openings with metal trim strips, and curb floor openings where indicated. Use metal sleeves; wood frames are not permitted.

E. Where ducts pass through fire rated walls and floors, or walls and floors of buildings more than two stories high, fill voids and cavities around wall and floor penetrations with firestopping and smoke sealing materials to maintain the required fire-rated condition of substrate.

F. Duct dimensions on DRAWINGS are interior dimensions. Dimensions shall be increased as necessary to compensate for liner thickness.

G. Where rectangular sheet metal ductwork is indicated, on approval by the ARCHITECT-ENGINEER, equivalent capacity round ductwork may be substituted.

H. Ducts exhausting shower rooms shall be aluminum sheet metal soldered watertight and pitched to the shower-bathroom registers.

I. Repair galvanized surfaces damaged by method of duct fabrication by the application of zinc rich paint per manufacturer’s instructions.

J. Crossbreak or bead rectangular sheet metal ducts, 19 inches wide or larger, which have more than 10 square feet of unbraced panel (including externally insulated ducts). Where sheet metal is not crossbroken or beaded, increase sheet metal gage by four gage numbers, i.e., 24-gage crossbroken equal to 20 gage not crossbroken.

K. Where ducts pass through fire-walls or floor dividing conditioned spaces from unconditioned spaces, provide a flanged duct-segment for installation during the time of wall construction, to provide a tight, hermetic seal.

3.2 DUCTWORK AND PLENUM FABRICATION

A. Duct And Plenum Gages, Joints And Reinforcement
   1. Provide fittings, duct, joints and reinforcement per SMACNA HVAC Duct Construction Standards except as otherwise specified. Fabricate to 2” WG, positive or negative, except as otherwise indicated. Where higher pressure class is indicated for a system or portion of a system, fabricate to indicated pressure class per SMACNA HVAC Duct Construction Standards. Minimum Seal Class B. Minimum sheet metal thickness shall be 24 gage.
   2. Provide fittings, duct, joints and reinforcement per SMACNA HVAC Duct Construction Standards except as otherwise specified. Fabricate to system fan static pressure scheduled except that minimum Seal Class B shall be provided. Minimum sheet metal thickness shall be 24 gage.

B. Joint Assembly And Gaskets
   1. Assemble standard longitudinal seams and transverse joints with elastomer calk except as otherwise specified.
   2. Bolt flanges per SMACNA HVAC Duct Construction Standards unless a different size or spacing is required to mate with equipment flanged connections. Gasket flanged joints at equipment connections and maintenance access locations. Elastomer calk may be used to adhere gaskets to joint face.

C. Turning Vanes For Right Angle Elbows And Branch Tees
   1. Cut individual turning vanes exactly to required length. Cuts shall be neat and square. Turning vanes will not be accepted if they are cut short, are cut on a bias or exhibit jagged cuts.

D. Square Elbows
   1. Provide double vane duct turns in accordance with SMACNA DCS Fig. 2-3 or commercial equivalent products as approved by the ARCHITECT-ENGINEER.

E. Outlets, Inlets And Supply Duct Branches
   1. Install branches, inlets, and outlets in such manner that air turbulence is reduced to a minimum and air volume will be properly apportioned and as follows:
      a. Where a duct branch is to handle more than 25% of the air handled by the duct main, use a complete 90 degree increasing elbow with an inside radius of 0.75 times branch duct width. Fabricate the size of the leading end of the increasing elbow within the main duct in the same ratio to the main duct size as the ratio of the relative air quantities handled.
      b. Where a duct branch is to handle 25% or less of the air handled by the duct main, furnish a branch connection of 45 degrees, straight or radius tap-in with volume damper.
   2. Where supply ducts have side outlets without branch ductwork, such as registers or grilles, provide turning vanes with manual adjustment.

F. Supply Duct Transitions
   1. Where the shape of a duct changes, the angle of the side of the transition piece shall not exceed 15 degrees from the straight run of duct connected thereto, unless otherwise indicated.
   2. Where equipment is indicated in ductwork, the angle of the side of the transition piece from the straight run of duct connected thereto shall not exceed 15 degrees on the upstream side of the equipment and 22-1/2 degrees on the downstream side of the equipment, unless otherwise indicated.

G. Tee Connections
   1. Construct tap-ins per SMACNA HVAC Duct Construction Standards Fig. 2-6, unless otherwise indicated.

H. Access Openings And Doors
   1. Provide insulated access doors and panels in insulated ductwork. Fabricate access doors and panels in ductwork per SMACNA (HVAC Duct Construction Standards)(Round Industrial Duct Constructions Standards)(Rectangular Industrial Duct Constructions Standards) for the following locations:
      a. Upstream and downstream from coils.
      b. Adjacent to fire dampers at the fusible link.
      c. At controls or items requiring periodic inspection, adjustment, maintenance or cleaning.
      d. Where indicated.
   2. Size access openings minimum 10 by 12 inches unless precluded by duct dimensions.
   3. Make duct access provisions suitable for commercial practice duct cleaning methods utilizing vacuum devices. Space access openings with a frequency and at points, which will permit ready access to duct with no duct or insulation cutting. Where access through an air diffusion device or through access doors is not available at a specific point, provide 8 inch diameter 16 gage access plates at not more than 10 foot centers. Where duct is insulated and vapor sealed, provide mastic seals around circumference of access. When access plate is in place and insulated, provide external identification of location.

I. Round Duct Requirements
   1. Provide duct, fittings, joints and reinforcement per SMACNA HVAC Duct Construction Standards for pressures up to 2” WG positive or negative. For pressures greater than 2” WG negative fabricate per SMACNA Round Industrial Duct Construction Standards. Round duct connections to main shall be:
      a. 45 degree lateral.
      b. Combination tee.
      c. 2-way “Y”.
      d. Conical tee.

3.3 DUCT AND EQUIPMENT SUPPORT SYSTEM

A. General

1. Select and provide duct and equipment support system per SMACNA HVAC Duct Construction Standards. After system start-up, replace or otherwise alleviate condition of any duct support element which vibrates.
2. Attach hot rolled carbon steel, prime coated hanger rods, angles, and straps to beam clamps, concrete inserts, and masonry anchors and fasteners per SMACNA HVAC Duct Construction Standards. Set inserts and anchors in conjunction with other Trades. Lugs welded to ducts are not acceptable as sole supports. Powder actuated fasteners into steel or concrete, welded studs, C-clamps, and friction clamps are not acceptable.
3. Do not hang ductwork or equipment from roof deck, piping, other ducts or equipment.
4. Provide not less than one set of two vertical support elements for each point of support and each length of duct. Install supports on sides of duct turns, branch fittings and transitions. Cross-brace hangers vertically and laterally to eliminate sway.
5. Support rectangular ducts in sizes to 36 inches by strap type hangers attached at not less than three places to not less than two duct surfaces in different planes or by trapeze hangers. Perforated strap hangers are not acceptable. Support rectangular ducting 36 inches and larger with trapeze hangers.
6. Use angle iron “V” construction supports or similarly rigid construction for vertical ducting which needs lateral support. Anchor downcomers to building to prevent swaying due to functional operation of any discharge grille directional device. Where no building element is convenient, multi-point cables, structural elements or angle iron may be used.
7. Where ducts are required to have insulation with a vapor sealed facing, support duct on trapeze hangers. Space hangers far enough out from the side of the duct to permit the duct insulation to be placed on the duct inside of the trapeze. Under no circumstances shall duct hangers penetrate the vapor sealed facing.
8. Where ductwork system contains heavy equipment, excluding air diffusion devices and single leaf dampers, hang such equipment independently of the ductwork with rods or angles sized to support the load.
9. Duct hangers in direct contact with galvanized duct surfaces shall be galvanized steel or black carbon steel painted with zinc rich paint.
10. Allowable loads on purlins or the top chord of jack trusses between panel points shall be such as to produce a moment no greater than the moment produced by a one kip concentrated load at midspan of the purlin or jack truss or by the uniform mechanical (utility) load specified on the DRAWINGS. Loads shall not be supported from the top chord of roof or carrying trusses except at their panel points.
11. When the hanger load exceeds the above limits, provide reinforcing of purlin(s) or additional support beam(s). When an additional beam is used, install beam such that it frames into the roof purlin or jack truss top chord or bears on the roof truss top chord panel point.
12. Limit the location of supporting elements for ductwork and equipment when supported from roof to panel points of the bar joists and limit the allowable load on the bar joist such that the loads produce a moment no greater than the moment produced by one kip load at mid-span of bar joist or by a uniform (utility) load specified on the DRAWINGS.

13. When the hanger load exceeds the above limits, provide reinforcing of the roof bar joists or additional structural support as required. When an additional member is used, support the added member at the panel points. Stabilize member by connection to adjacent roof bar joists.
14. Consider bar joists used for supporting fire protection sprinkler mains, electrical lighting fixtures, electrical power duct or cable tray as fully loaded. Supplemental reinforcing of these bar joists or auxiliary support steel shall be furnished and installed by the CONTRACTOR.
15. Building structure shall not be reinforced except as approved by the ARCHITECT-ENGINEER in writing.

3.4 DUCTWORK SPECIALTIES

A. Acoustic Lining
   1. Install duct liner per SMACNA HVAC Duct Construction Standards.

B. Flexible Connections
   1. Provide flexible connection between sheet metal work and vibrating equipment per SMACNA HVAC Duct Construction Standards. Flexible materials shall be installed loosely without tension at any point and shall be suitable for temperatures and pressures encountered.
   2. Install flexible connections after system air moving devices (fans) are operative and vibration isolation mountings have been adjusted. When system fans are operating, connectors shall be free of wrinkles caused by misalignment or fan reaction; width of surface shall be curvilinear.
   3. Furnish flexible connections where ducts cross building expansion joint lines.

C. Duct Probe Access
   1. Locate access fittings as required and directed under the WORK of SECTION 15999.

D. Air Diffusion Devices
   1. Aesthetically locate air diffusion devices with respect to lighting, ceiling patterns and masonry bond, unless otherwise dimensioned or approved.
   2. Install wall mounted supply registers as indicated.
   3. Install devices per manufacturer’s published instructions.

E. Balancing Dampers
   1. Provide balancing dampers at each duct main and branch.

F. Fire Dampers And Wall Collars
   1. Provide fire wall duct penetrations with a fire damper having a fire rating equal to or exceeding the wall rating and a slip joint located on each side of the wall as near to the face of the wall as practical. Securely fasten fire damper to the wall.

G. Flexible Duct
   1. Maximum bends for low pressure duct run-outs to diffusers shall be 90 degrees. Medium pressure duct inlet connections to terminal air units shall be limited to 2 feet of straight run. Flexible duct run for diffuser connection shall be limited to a maximum 5 feet.

H. Sound Stopping
   1. Provide effective sound stopping and adequate operating clearance to prevent structure contact where ducts penetrate walls, floors, or ceiling into occupied spaces. “Occupied Spaces” include space above ceilings where no special acoustic treatment of ceiling is provided. Make penetrations finish compatible with surface being penetrated.
   2. Provide sleeves or flanged duct segments and angle iron framing at time of wall construction.
   3. Pack the space between a duct and the inside of a duct sleeve or a construction surface penetration solid with a mineral fiber wherever ducting passes and through equipment room walls, floors and ceilings connected to occupied spaces; other locations where sleeves of construction surface penetrations occur between occupied spaces.
   4. Sound stopping and vapor barrier sealing of duct shafts and floor and wall openings, may be accomplished by packing with properly supported mineral fiber insulation and vinyl mastic or by foaming in place with self-extinguishing, silicone foam and cover with 11 gage sheet metal as specified for ductwork. Make vapor barrier of not less than 1/8 inch thickness of UL Listed vinyl mastic applied to visible and accessible surfaces.

I. Painting
   1. Interiors of ducts or construction above ceilings shall not be visible through air diffusion devices. Where interior of duct would be visible, paint the viewed interior flat black as part of the Work under this SECTION.
   2. Where construction above ceiling would be visible, provide sheet metal baffle with turned edges suspended from building construction. Size and position of baffle SHALL NOT restrict air distribution design. Paint baffle black as part of the WORK under this SECTION. Where space above ceiling precludes use of baffle construction, paint visible building surfaces flat black as part of the WORK under this SECTION.

3.5 FIELD QUALITY CONTROL

A. Structural Integrity And Leakage Tests
   1. Structural integrity and leakage testing of air handling systems shall be as systems, or as duct mains and branches.
   2. Test complete system after completion of erection. If excessive leakage is found, determine source(s) of leakage, repair and retest.
   3. Perform tests for structural integrity and leakage prior to insulation of surfaces, painting and concealment of work in the presence of the ARCHITECT-ENGINEER.
   4. Inspect and test systems, as follows:
      a. Perform systems structural and leakage tests per applicable requirements of SMACNA Duct Construction Standards and HVAC Air Duct Leakage Manual.
      b. To positive or negative pressures, or both, whichever is normal to the portion of system under test.

B. Systems Acceptance
   1. Systems will be acceptable provided:
      a. No visually apparent mechanical defects exist.
      b. No audible leakage exists at any point.
      c. No leakage is perceptible to the hand when placed within 6 inches of a joint.
      d. Systems have met SMACNA test requirements.
      e. Fire dampers tested as part of the WORK of SECTION 15999.

C. Test Apparatus And Procedures
   1. Test apparatus and procedures shall be per SMACNA NEBB Procedural Standards for Testing, Adjusting and Balancing. Provide filtered blower inlet and automatic safety relief device to protect system. Accuracy of measurement of leakage flow rate shall be certified as within 2% of total leakage flow.

D. Test Report
   1. Provide a "Test Report" on systems tested, identified by system or section thereof and containing leak test curves for apparatus used and data pertinent to acceptance requirements.

3.6 ADJUSTING AND CLEANING

A. Adjust And Balance Air Distribution Systems
   1. Air handling systems balancing and adjustment will be done as part of the WORK under SECTION 15950.

B. Ductwork Cleaning Provisions
   1. Protect open ducting from construction dust and debris. Clean dirty assembled ducting by subjecting main and branch interior surfaces to air streams moving at velocities two times specified working velocities, at static pressures within maximum ratings. This may be accomplished by: Filter equipped portable blowers which remain the CONTRACTOR'S property, wheel mounted, compressed air operated, perimeter lances which direct the compressed air and which are pulled in the direction of normal air flow, other means approved by the ARCHITECT-ENGINEER. Compressed air used for cleaning ducting shall be water and oil free. After construction is complete, and prior to acceptance, remove construction dust and debris from exterior surfaces.

END OF SECTION

Revision History	
Date	**Rev. No.**
A	0
B	0
C	0
D	0
E	0
F	0
02-19-09	0

LMS/djo
Y:\d\timsdatasf\BROOKHAVEN_NATIONAL_LABORATORY\SF070003\200-PROJEXEC\280-SPEC\15800.doc

SECTION 15950

TESTING AND BALANCING

PART 1 GENERAL

1.1 SUMMARY

A. Scope
1. WORK includes a complete mechanical, fluid and thermal survey to define system needs. Certain minimum air handling and hydronic systems balancing and adjusting provisions are indicated. Provide any additional air handling systems and hydronic systems balancing or adjusting provisions deemed necessary to comply with the CONTRACT DOCUMENTS, at no increase in CONTRACT Sum.

B. Description Definitions
1. The words “air handling systems” for the purposes of the WORK under this SECTION shall mean environmental systems provided as part of the WORK under Division 15 Sections.
2. The word “hydronic” for the purposes of the WORK under this heading shall mean COOLING TOWER WATER and CHILLED WATER systems.

C. Related Work Specified Under Other Sections
1. Division 02 Section “Water Distribution.”
2. Division 15 Section “Aboveground Piping Systems.”
3. Division 15 Section “Pumping Equipment.”
4. Division 15 Section “Atmospheric Cooling Equipment.”
5. Division 15 Section “Air Distribution And Exhaust.”
6. Division 15 Section “Environmental Equipment.”
7. Division 16 Section “Environmental Systems Control.”

1.2 QUALITY ASSURANCE

A. Balancing Agency Qualifications
1. Obtain the service of an agency that performs the type of balancing specified. Prior to commencing work under this SECTION, the testing agency shall have been approved by the OWNER’S REPRESENTATIVE. The agency shall be a member of the Associated Air Balance Council (AABC) or shall be a certified member of the State Chapter of the National Environmental Balancing Bureau (NEBB) and shall submit adequate documentation as to its competence. Affiliation with manufacturers, installing contractors, or engineering firms not normally engaged in or certified in air balancing work will preclude acceptance. The field representative of the balancing agency shall be a person certified by the State Chapters of the AABC or the NEBB where this work is performed. Perform WORK per the standards of the AABC, NEBB or SMACNA where applicable, the requirements of the CONTRACT DOCUMENTS and in the presence of the OWNER’S REPRESENTATIVE.

B. Performance Verification
   1. The OWNER may, as an option, engage the services of a qualified independent testing agency to verify that the fluid distribution systems provided under the CONTRACT have been balanced by the CONTRACTOR to produce the end results required by the CONTRACT DOCUMENTS.
   2. During normal course of construction, provide means integral to systems for balancing and testing including: Fluid control devices; pressure, temperature, flow, power and speed sensing points; means of access to WORK being verified.

1.3 SUBMITTALS

A. Furnish submittals for items that are identified in this SECTION by a different typeface and a bracketed code (e.g., *Item [L]*). Refer to Division 01 Section "Submittals" for definition of codes for types of submittals and the administrative requirements governing submittal procedure. Additional submittal requirements pertaining to this SECTION are specified herein under this Article.

B. *Submittals [T]*: Systems acceptance is predicated upon successful completion of specified WORK, receipt by the OWNER'S REPRESENTATIVE of certified data summarizing the performance of systems within design intent, and approval thereof. Following completion of any corrective work and approval of submitted data, provide bound copies of testing, balancing, and adjusting report. Arrange data by system and identify apparatus and items, utilizing referenced minimum standard forms where possible, and supplementing with reasonable facsimiles where necessary and single line systems diagrams indicating points of adjustment. Report shall be accompanied by two copies of referenced standards used as a basis of testing, balancing and adjusting WORK.

C. Certificates: Provide independent laboratory certification of test apparatus calibration data, dated after date of award of CONTRACT. The OWNER'S REPRESENTATIVE reserves the right to require recalibration of any or all test apparatus components per the frequency recommended by the component manufacturer, or when reasonable doubt of accuracy exists.

D. Guarantee: If the balancing agency selected is a member of the AABC, the Balancing Agency, i.e., the CONTRACTOR shall notify the AABC of the CONTRACT award. Deliver the AABC "NATIONAL PROJECT CERTIFICATIONS GUARANTEE" to the OWNER'S REPRESENTATIVE within 30 days of award.

PART 2 PRODUCTS

2.1 BALANCING, ADJUSTMENT AND ACCEPTANCE CRITERIA

A. Air Handling Systems
   1. Systems volume limits:
      a. Air handler delivery: Plus 10%, minus 0% of design CFM at design temperature.
      b. Terminal device delivery: Plus or minus 10% of design CFM at design temperature.

B. Hydronic Systems
   1. System flow limits:
      a. Pump delivery: Plus 10%, minus 0% of design GPM at design temperature.
      b. Flow station delivery: Plus or minus 10% of design GPM at design temperature.

2.2 TEST APPARATUS

A. Test apparatus: Provide required by SMACNA, “Manual for the Balancing and Adjustment of Environmental Systems”, AABC “National Standards for Field Measurements and Instrumentation”, Volumes, I and II, or NEBB, “Procedural Standards for Testing, Balancing, Adjusting of Environmental Systems”.

PART 3 EXECUTION

3.1 GENERAL

A. Perform tests for structural integrity and leakage prior to balancing, adjusting, insulation of surfaces, painting and concealment of the WORK. Retest systems containing repaired defects to original criteria, except upon waiving of test by the OWNER’S REPRESENTATIVE.

B. Perform hydronic systems structural and leakage testing per requirements specified under Division 15 Sections under PIPING SYSTEMS TESTING in each SECTION.

C. Perform air handling systems structural and leakage testing per requirements specified under Division 15 Section “Air Distribution And Exhaust” under FIELD QUALITY CONTROL.

D. Test fire dampers by applying heat to fusible link to permit operation. Testing shall be done in the presence of the OWNER’S REPRESENTATIVE. Fusible links shall be replaced as part of the WORK under Division 15 Section “Air Distribution And Exhaust.”

E. Adjust items of the various systems for proper operation within framework of design intent, and operating characteristics as published by the equipment manufacturer. The OWNER’S REPRESENTATIVE may require the CONTRACTOR to provide the services of an authorized representative of the manufacturer in the event that the CONTRACTOR is unable to adjust any piece of equipment.

F. Do not operate equipment for any purpose until properly lubricated and brought into specified service condition.

G. Make system final adjustments and permanently mark and fix settings by drilling and bolting or pinning of operators, so as to be readily restorable if disturbed.

H. Where unusual measurement conditions occur, take data and do work in a manner previously agreed upon with the OWNER’S REPRESENTATIVE.

3.2 AIR HANDLING SYSTEMS

A. General
   1. After balance and adjustment operations have been completed, test the system as a whole to see that all items perform as an integral part of the system, and that space conditions are evenly controlled. Make corrections and adjustments necessary to produce the required space conditions.

B. Balancing Procedure
   1. Balance and adjust apparatus per the standards of AABC, NEBB, or SMACNA.

C. Balancing Report
   1. Provide balancing report on systems balanced, balancing test apparatus data, and air diffusion device flow coefficients, using current AABC standard forms for the following:
      a. Air handling apparatus data.
      b. Exhaust fan data.
      c. Air diffusion devices data.
      d. Duct traverse data for the main supply duct, main exhaust duct, outside air intake duct, and ducts indicated.
      e. Duct zone traverse data.
      f. Filter apparatus data which includes visual condition, inlet pressure and differential pressure for each filter installation.
      g. Coil data which includes visual condition, inlet pressure and differential for each coil installation.
      h. Pressure at inlet to each variable volume box.
      i. Air balancing station performance data and curves.

3.3 HYDRONIC SYSTEMS

A. Procedure
   1. Complete air balance shall have been accomplished before water balance begins.
   2. Prepare hydronic systems in the following manner:
      a. Verify that valves and balancing devices are properly installed.
      b. Open valves to full open position, including coil stop valves, by-pass valves and return line balancing cocks.
      c. Remove and clean strainer screens. Refer to Division 15 Section “Aboveground Piping Systems” for pipe flushing procedures.
      d. Examine and determine that water in each system has been treated as specified.
      e. Check rotation of pumps only after obtaining approval from OWNER’S REPRESENTATIVE.
      f. Check compression tanks to determine that they are not air-bound and that system is full of water.
      g. Check air vents at high points and determine that they are installed and operating properly.
      h. Set valves so that all coils are on full cooling flow through coils. Use same procedure when balancing heating coils, set temperature controls on full heating.

i. Set water circulating pumps to proper GPM delivery.
j. Adjust chilled water flow through water chillers.
k. Check entering water temperatures and leaving water temperatures through cooling and water heating equipment.
l. Check water temperature at inlet side of cooling coils. Note rise of temperature from source.
m. Proceed to balance each coil.
n. Upon completion of flow reading and adjustment of coils, mark settings and record data.
o. After adjustment to coils are made, recheck settings at pumps, convertors; readjust if required.
p. Measure pressure drop through coils at set flow rate on call for full cooling and on full heating. Set pressure drop across by-pass valve to match coil full pressure drop to prevent unbalanced flow conditions when coils are on full bypass.

3. Duplicate applicable provisions for each hydronic system.
4. Balance and adjust apparatus per the standards of AABC, NEBB, or SMACNA.

B. Balancing Report

1. Provide operational test on all systems balanced, balancing test apparatus data, orifice or pitot tube data, and include:
   a. For each cooling water coil element: Inlet water temperature; leaving water temperature; inlet air relative humidity and air temperature; air pressure drop across each element; water pressure drop across each element; pressure drop across bypass valve; calculated and measured flow rates through all system elements.
   b. For each pump: Balanced condition suction and discharge pressure; flow rate; mechanical specifications of unit; rated and actual KW input and power factor.
   c. For each hot water convertor equipment item: Inlet water temperature; leaving water temperature; pressure drop across all units; calculated and measured waterflow.

END OF SECTION

Revision History	
Date	**Rev. No.**
B	0
C	0
D	0
E	0
F	0
02-19-09	0

LMS/djo
Y:\d\timsdatasf\BROOKHAVEN_NATIONAL_LABORATORY\SF070003\200-PROJEXEC\280-SPEC\15950.doc

THIS PAGE INTENTIONALLY LEFT BLANK

SECTION 16010

ELECTRICAL GENERAL REQUIREMENTS

PART 1 GENERAL

1.1 RELATED DOCUMENTS

A. Drawings and general provisions of the Contract, including General and Supplementary Conditions and Division 1 Specification Sections, apply to work of this Section.

1.2 RELATED WORK SPECIFIED UNDER OTHER SECTIONS

1.3 SUMMARY

A. This Section includes general administrative and procedural requirements for electrical installations. The following administrative and procedural requirements are included in this Section to expand the requirements specified in Division 1 Sections.
   1. Substitutions.
   2. Permits and fees.
   3. Submittals.
   4. Coordination drawings.
   5. Record drawings.
   6. Maintenance manuals.
   7. Rough-ins.
   8. Electrical installations.
   9. Cutting and patching.

B. This Section includes basic requirements for materials and installations for electrical work, including but not limited to:
   1. Electrical demolition work.
   2. Excavating and backfill.
   3. Concrete.
   4. Sleeves.
   5. Sealing of openings.
   6. Access doors.
   7. Touch-up painting.

1.4 REFERENCES

A. The electrical and physical properties of all materials, and the design, performance characteristics, and methods of construction of all items of equipment, shall be in accordance with the latest issue of the various, applicable Standard Specifications of the following recognized authorities:
   1. ANSI - American National Standards Institute
   2. ASTM - American Society for Testing Materials
   3. FCC - Federal Communication Commission

4. ICEA - Insulated Cable Engineers Association
5. IEEE - Institute of Electrical and Electronics Engineers
6. NEC - National Electrical Code
7. NEMA - National Electrical Manufacturer's Association
8. UL - Underwriters' Laboratories, Inc.

1.5 SYSTEM DESCRIPTION

A. Design Requirements: Furnish all labor, materials, equipment, technical supervision, and incidental services required to complete, test and leave ready for operation the electrical systems as specified in the Division 16 Sections and as indicated on Drawings.
   1. The Electrical Drawings indicate the general design and extent of the electrical system. Comply to the Drawings as closely as actual construction of the building and the work of other Trades permit.

B. Substitutions: Base Bid must be in accordance with materials or products specified. Any exceptions to this must be approved in writing by the ARCHITECT-ENGINEER ten (10) days or more prior to bidding.
   1. Voluntary alternates may be submitted for consideration, with listed addition or deduction to the Bid, but will not affect the awarding of the Contract.

C. Permits and Fees: Obtain all permits, licenses, inspections and test required. Upon completion of the Work, obtain and send certificates of inspections and approvals to the ARCHITECT-ENGINEER.
   1. Pay all fees and expenses for permits, licenses, tests and inspections.

D. Examination of Drawings and Premises: Before submitting Bids, examine the architectural, mechanical and other trades' drawings and specifications.
   1. Notify ARCHITECT-ENGINEER should any discrepancies occur between them and the electrical work.
   2. No additional charges will be allowed because of failure to make this examination, or to include all materials and labor required for the Work.
   3. Before submitting Bids, examine the premises to determine existing conditions for performing the Work. No additional charges will be allowed because of failure to make this examination or to include all materials and labor to complete the Work.
   4. The Architectural Drawings take precedence in all matters pertaining to the building structure, Mechanical drawings in all matters pertaining to Mechanical trades and Electrical drawings in all matters pertaining to Electrical trades installation. However, where there are conflicts or differences between the Drawings for the various trades, report such conflicts or differences to the ARCHITECT-ENGINEER who shall determine the course of action to be taken.

E. Changes Involving Electrical Work: The design of the electrical systems is based on the mechanical and building equipment specified and scheduled on the Drawings.
   1. Where equipment changes are made that involve additional electrical work (larger size motors, additional wiring of equipment, etc.) the Mechanical or respective trades involved shall compensate the electrical trades for the cost of the additional Work required.

F. Performance Requirements: Perform all work in a first class and workmanlike manner, in accordance with the latest accepted standards and practices for the Trades involved.

G. All equipment of the same or similar systems shall be by the same manufacturer.

1.6 SUBMITTALS

A. The following is in addition to the requirements for submittals in Division 1, Section 01340.

B. Material List: Submit a complete list of all materials and equipment, and their manufacturers, for approval by the ARCHITECT-ENGINEER within 15 days after award of contract and prior to submittal of shop drawings.

C. Shop Drawings: Prepare layout shop drawings drawn to scale and submit one (1) transparency copy and two (2) prints of each to the ARCHITECT-ENGINEER for review, together with required number of additional copies as required by the General Conditions. Sepia transparencies of the Contract Documents will be furnished for this purpose. After the shop drawings are reviewed, the transparency copy will be stamped and returned for printing and distribution. Refer to Division 1 for submittals and quantities.
   1. Layout shop drawings shall show building floor plans to scale and shall include lighting and power distribution systems, all details of electrical construction, routing of conduits, wiring, circuiting and related information necessary for the installation and future maintenance of the electrical wiring systems.

D. No apparatus or equipment shall be shipped from stock or fabricated until shop drawings for them have been reviewed by the ARCHITECT-ENGINEER. By the review of shop drawings, the ARCHITECT-ENGINEER does not assume responsibility for actual dimensions or for the fit of completed work in position, nor does such review relieve Electrical Trades of full responsibility for the proper and correct execution of the work required.

E. Submit shop drawing with all pertinent data and with identification mark number as specified or scheduled on the electrical Drawings.

F. Shop drawings shall be reviewed by the Electrical Contractor for completeness and accuracy prior to submitting to the ARCHITECT-ENGINEER for review. The shop drawings shall be dated and signed by the electrical Contractor prior to submission.

G. Where the shop drawings consist of manufacturer's standard detail drawing or schedules and contain data for a variety of similar equipment, indicate the data pertinent to the equipment furnished for this project only. Standard detail drawings and schedules not clearly indicating which data is associated with this Project shall be returned "Rejected".

H. Where accessories and/or options are specified and do not appear as part of manufacturer's standard detail drawings, state each accessory that is to be provided with the equipment on the standard detail drawings.

I. Partial submittals for equipment will not be permitted. Where partial submittals are transmitted to the ARCHITECT-ENGINEER, they will be returned "Rejected”.

J. Lighting fixture submittals shall be submitted as one (1) package including all fixtures intended to be used for this Project.

K. Submittal Preparation: Place a permanent label or title block on each submittal for identification. Indicate the name of the entity that prepared each submittal on the label or title block.
   1. Provide a space approximately 4” x 5” on the label or beside the title block on shop drawings to record the Contractor’s review and approval markings and the action taken.
   2. Include the following information on the label for processing and recording action taken.
      a. Project Name
      b. Date
      c. Name and address of ARCHITECT-ENGINEER
      d. Name and address of Contractor
      e. Name and address of Subcontractor
      f. Name and address of Supplier
      g. Name of Manufacturer
      h. Number and title of appropriate Specification Section
      i. Drawing number, identification mark, fixture type, panelboard number, and detail references, or as noted on the electrical drawings.

L. Submit manufacturer’s submittals on all major electrical systems and/or equipment.

M. Project Record Documents: Revise layout shop drawings as required during construction to indicate the as-built condition.
   1. At the completion of the Project, resubmit to the OWNER’S REPRESENTATIVE the revised sepias and one set of prints for OWNER’S record.
   2. Furnish and deliver to the OWNER’S REPRESENTATIVE a manual of all shop drawings and product data upon substantial completion. The manual shall consist of a standard hard cardboard, vinyl covered, 3-ring binder, letterhead size, 8-1/2” x 11”. Shop drawings shall be folded and punched. All items and pages shall be numbered with typewritten index inserted at front of manual.
   3. Submit final project record documents as described in Division 1.

N. Operation and Maintenance Data: Retain operating instructions, service instructions, parts lists, etc., which are shipped with electrical equipment. On completion of the work, give these items to the ARCHITECT-ENGINEER, for the OWNER’S use. If this information is not shipped with the equipment, obtain from the manufacturer.
   1. Furnish two (2) sets of bound operating instructions to the ARCHITECT-ENGINEER. Each set shall include:
      a. One (1) copy of all shop drawings.
      b. Operating and maintenance instructions.
      c. As-built drawings.

1.7 QUALITY ASSURANCE

A. Regulatory Requirements:
   1. Ordinances and Codes: Perform all work in accordance with applicable Federal, State and local ordinances and regulations, the Rules and Regulations of the National Board of

Fire Underwriters, the National Electric Code, and the latest accepted practices of IEEE and NEMA.

a. Notify the ARCHITECT-ENGINEER before submitting his proposal should any changes in Drawings or Specifications be required to conform to the above codes, rules or regulations. After entering into Contract, make all changes required to conform to above ordinances, rules and regulations without additional expense to the Owner.

b. Barrier-Free Regulations: All materials and installations shall comply with the requirements of the State of Michigan Handicapped Barrier-Free Regulations and with the Americans With Disabilities Act (ADA).

B. Rules of Local Utility Companies:

1. Perform work in accordance with the rules of local utility companies. Before submitting the bid check with each utility supplying services to this Project. Determine from them all equipment and charges which they will require and include the cost in the bid.

1.8 DELIVERY, STORAGE AND HANDLING

A. Storage and Protection: Provide adequate storage space for all electrical equipment, conduit and materials delivered to the job site under a weather protected enclosure. Location of the space will be designated by the ARCHITECT-ENGINEER's Field Representative. Equipment set in place in unprotected areas must be provided with temporary protection.

1. Be responsible for the care and protection of electrical equipment until it has been fully tested and accepted.
2. Protect materials with permanent factory finish from damage by covering.
3. Protect conduit openings with temporary plugs or caps.

1.9 PROJECT/SITE CONDITIONS

A. Field Measurements:

1. Drawings are not intended to be scaled for roughing-in or to serve as shop drawings. Take all field measurements required for fitting the installation to the building.

1.10 SEQUENCING AND SCHEDULING

A. Sequence and schedule work so as to avoid interference with the work of other Trades. Be responsible for removing and relocating any work which in the opinion of the OWNER’S REPRESENTATIVES causes interference.

1.11 WARRANTY

A. Warranty: Provide a one year parts and labor warranty for all equipment and installation. Comply with requirements of the General Conditions.

1.12 MAINTENANCE

A. Maintenance Materials: Retain all portable and detachable portions of the installation such as keys, tools, manuals, etc., until the completion of the work and then turn them over to the

Owner and obtain itemized receipt. This receipt shall be attached to the "Final Application" for payment.

B. Retain operating instructions, service instructions, parts lists, etc., which are shipped with electrical equipment. On completion of the Work, give these items to the ARCHITECT-ENGINEER for the OWNER'S use. If this information is not shipped with the equipment, obtain from the manufacturer.

C. Furnish three (3) sets of bound operating instructions to the ARCHITECT-ENGINEER. Each set shall include:
   1. One (1) copy of all shop drawings.
   2. Operating and maintenance instructions and manuals.
   3. As-built drawings.

PART 2 PRODUCTS

2.1 CONCRETE

A. Provide concrete work required for the electrical installation. Concrete work shall include envelopes for underground service conduits, ducts, housekeeping pads beneath equipment and bases for outdoor lighting equipment. Concrete work shall be in conformance with the Section 03300 or as indicated.

2.2 ACCESS DOORS

A. Furnish access doors as required to make accessible all controls, motors, electrical boxes and other equipment installed by Electrical trades or as required by Code.
   1. Architectural trades will install access doors provided under this Section.
   2. Access door size shall be minimum 12" x 12" in walls, 24" x 24" in ceilings.
   3. Plaster or acoustical tile inserts shall be by Architectural trades.
   4. Equip access doors with screwdriver operated cam lock.
      a. At recessed panel access doors to receive plaster or acoustical tile inserts, furnish plastic grommet and sleeve at lock.
   5. Access doors in fire rated walls or ceilings shall be 1-1/2 hour rated, "B" label, 250 degF maximum temperature rise in 30 minutes, shall be self-closing and self-latching and shall carry Underwriters' Laboratories, Inc. (UL) or Warnock-Hersey Label.

B. In non-fire rated drywall, veneer plaster, masonry or ceramic tile walls, furnish "Type M, 3202 Series" access doors as manufactured by Milcor Ltd. Partnership or approved equal.

C. In non-fire rated gypsum board or veneer plaster walls and ceilings, furnish "Type DW, 3203 Series" by Milcor Ltd. Partnership or approved equal.

D. In fire-rated drywall, veneer plaster, masonry or ceramic tile walls, furnish "3208 Series" by Milcor Ltd. Partnership or approved equal.

E. In non-fire rated drywall, veneer plaster or plaster ceilings, furnish “Type M, 3202 Series” by Milcor Ltd. Partnership or approved equal.

F. In non-fire rated plaster walls or ceilings, furnish “Type K, 3200 Series” by Milcor Ltd. Partnership or approved equal.

G. In non-fire rated plaster or acoustical tile ceilings, furnish “Type AP, 3206 Series” and “Type AT, 3205 Series” by Milcor Ltd. Partnership or approved equal.

2.3 SEALING OF OPENINGS

A. Seal openings around electrical materials (Conduit, raceways, cable trays, panels, etc.) where floors, fire rated walls and smoke barriers are penetrated. (Fiberglass is not acceptable.) Fire and/or smoke barriers shall be UL Listed fire and smoke stop fittings and shall have fire rating equal to or greater than the penetrated barrier. Refer to Section 07840 “Firestopping”.

2.4 SLEEVES

A. Provide conduit sleeves where conduits pass through concrete floors, walls, beams and ceilings.

B. Sleeves shall be galvanized rigid steel conduit. Do not use aluminum conduit. Where specific sizes are not indicated on the Drawings, sleeves shall be sized to provide one-half (1/2) inch clearance around the outside surface of the item for which they were installed. They shall be cut flush with wall surfaces, and shall extend one inch, or as directed through floor. Sleeves shall be packed with approved non-combustible packing material and sealed with sealant to prevent passage of air, liquid or fumes from one area to another. The filler and sealant materials used shall be rated at least equal in fire resistance to the construction material being penetrated. Floor sleeves shall be sealed between floor and sleeve with concrete grout. Refer to Section 07840 “Firestopping”.

2.5 EXPANSION FITTINGS

A. Provide expansion fittings in all conduit, cable trays, and feeder bus duct runs that cross building expansion joints, both in concrete slabs and where exposed.

2.6 NAMEPLATES AND DIRECTORIES

A. Identify switchgear, unit substations, motor controls, panelboards, safety switches, etc., with manufacturers' nameplate, shop order, where applicable on composite assemblies, and designations used on the Drawings.

B. All identification shall comply with the requirements of SECTION 16050, Appendix “A”.

PART 3 EXECUTION

3.1 ELECTRICAL DEMOLITION WORK

A. General: Perform electrical demolition work in a systematic manner. Use such methods as outlined below to complete Work indicated on the Drawings.

B. Obtain approval from the Owner prior to interrupting existing services. All service interruptions shall be at a time suitable to the Owner. Where the Owner approves service interruptions at times resulting in premium time work to this Contractor, this Contractor shall include the premium time in his Base Bid.

C. Ring out circuits prior to deactivating feeders and branch circuits to insure maintaining electrical power in adjacent unrenovated area. Where removal of conduit and wire affects "downstream" circuits, refeed downstream circuits.

D. Conduit in floor slabs shall be cut 1/2 inch below the floor and patched.

E. Where applicable, existing in-place conduit may be reused for new work providing that the installation is in accordance with Section 16050.

F. Where equipment or fixtures are removed, outlets shall be properly blanked-off, and conduits capped. After alterations are done, the entire installation shall present a "finished" look, as approved by the ARCHITECT-ENGINEER. The original function of the present electrical work to be modified shall not be changed unless required by the specific revisions to the system as specified or as indicated.

G. Materials salvaged from this work shall not be reused except where reuse is specifically indicated.

H. Existing electrical equipment removed, not reused and not specifically indicated to be turned over to the Owner shall be legally and properly disposed of off OWNER'S property.

I. Existing electrical equipment specifically indicated to be turned over to the Owner shall be carefully disconnected, removed and turned over to the Owner in a storage area as directed by the Owner.

3.2 TEMPORARY SERVICES

A. Provide temporary lighting, power and telephone service as described in Division 1.

B. The existing building will be occupied during the building expansion. Maintain electrical services and provide necessary temporary connections and their removal at no additional expense.

3.3 CUTTING AND PATCHING

A. Refer to Division 1 for requirements for cutting, patching and refinishing work necessary for the installation of Electrical Work.

B. Direct miscellaneous cutting and patching of the existing building construction for the installation of the Electrical Work.

C. The cutting of holes through the existing building construction shall only be done by the use of abrasive saws and rotary coring machines. The use of hammer and drill points will not be permitted. The openings shall not be cut larger than necessary for the installation of the electrical work. Openings shall then be grouted in. Where existing piping, etc. is removed, the unused openings shall be grouted in.

D. The drilling or punching of structural members, such as holes through beams or columns, shall not be done without the specific permission of the ARCHITECT-ENGINEER.

E. Cutting of holes through floors and walls shall be done only at such locations as may be directed by the ARCHITECT-ENGINEER.

F. Cooperate with the other Contractors so that all cutting and repairing in any given area will be done simultaneously.

G. Electrical work which may interfere with changes in piping, ducts or other mechanical equipment, as well as conduits and outlets that may be uncovered by the cutting of new openings in present building, shall be removed at the direction of the ARCHITECT-ENGINEER.

3.4 DAMAGE TO OTHER WORK

A. The Electrical Trades will be responsible for all damage to other Work caused by their Work or through the neglect of their workers.
   1. All patching and repairing of any such damaged Work shall be performed by the trades which installed the Work, but the cost shall be paid by the Electrical Trades.

3.5 CHASES AND RECESSES

A. Provide sizes and locations of chases and recesses affecting the electrical work for provision by general trades.

3.6 EXCAVATION AND BACKFILL

A. Furnish excavating and backfilling to install work specified in the Electrical Division. Refer to electrical drawings and Section 02300 for methods and materials.

3.7 EQUIPMENT FOUNDATIONS AND SUPPORTS

A. Furnish foundations and supports for electrical equipment and materials as required by codes, as listed hereinafter and shown or noted on the Drawings.

B. Provide necessary inserts, rod, structural steel frames, brackets, platforms, etc., for equipment suspended from ceilings or walls, such as conduits, transformers, panels, etc.

C. Inserts for equipment support shall be lead shield anchors for small work and expansion shields for large work. Wooden plugs will not be allowed. Do not use metal roof decking and cellular floors for supporting equipment.

D. Provide and install concrete bases 4” above finished floor, with leveling channels, where noted, for floor-mounted equipment such as unit substations, transformers, switchboards, distribution panels, motor control centers, etc.

3.8 STRUCTURAL AND MECHANICAL INTERFERENCES

A. Should construction conditions prevent the installation of switches, conduit, outlet boxes, junction boxes, conductors, lighting fixtures and/or other related equipment at locations shown on the drawings, minor deviations may be permitted and shall be as directed by the ARCHITECT-ENGINEER, and shall be made without additional cost to Owner.

3.9 COORDINATION WITH OTHER TRADES

A. Install Work so as to avoid interferences with the Work of other trades. Be responsible for removing and relocating any work which, in the opinion of the OWNER’S REPRESENTATIVE, causes interferences.

3.10 ASSEMBLY OF EQUIPMENT

A. The Contract Drawings and Specifications indicate items to be purchased and installed which are noted by a manufacturer’s name, catalog number and/or brief description.

B. The catalog number may not designate all the accessory parts and appurtenances required for the particular use or function.

C. Arrange with the manufacturer for the purchase of all items required for the complete installation and efficient operation.

3.11 EQUIPMENT CONNECTIONS

A. Connections to equipment, motors, lighting fixtures, etc., shall be made in accordance with the shop drawings and rough-in measurements furnished by the manufacturers of the particular equipment furnished. Any and all additional connections not shown on the Drawings but called for by the equipment manufacturer’s shop drawings or required for the successful operation of the particular equipment furnished shall be installed as part of this Contract at no additional charge to the Owner.

3.12 TESTING DUCTS AND CONDUIT FOR OBSTRUCTIONS

A. Ducts and conduits which are installed underground or concealed in concrete floor slab, foundations, etc., shall be cleared of foreign material and obstructions after installation and before conductor or pullwires are drawn in, by wire brushing, swabbing and employing an iron or hardwood mandrel which is ¼" smaller in diameter than the internal diameter of the duct or conduit. Pulling wires shall be left in empty conduits.

3.13 PHASING

A. Identify general power and lighting feeder and branch circuits with a visual color code as an integral part of the outer jacket or as a printed color coding the entire length of the insulation in accordance with the NEC.

3.14 PAINTING

A. In general, no painting is required by Electrical Trades other than touch-up of factory-finished electrical equipment.

B. All factory finished electrical equipment shall be cleaned at completion of the job. Equipment showing rust or mars shall be thoroughly cleaned and sanded, prime coated and touched up with enamel of color to match original finish.

3.15 FIELD QUALITY CONTROL

A. Tests and Inspection: When the systems are completed, operate equipment as directed by ARCHITECT-ENGINEER. Replace all faulty equipment. Make necessary adjustments before final acceptance.
   1. Tests shall include but not be limited to panels, lighting fixtures, receptacles, fire alarm system, generator transfer, sound systems, emergency lighting, branch circuits, etc.
   2. Test receptacles for polarity, opens, grounds, etc., using an approved receptacle tester, Hubbell #5200. Provide a letter to the Engineer stating that all equipment has been tested and adjusted properly.
   3. Perform all tests required by State, City, County and/or other agencies having jurisdiction.
   4. Provide all materials, equipment, etc., and labor required for tests.

3.16 CLEANING

A. Keep premises free from accumulation of waste materials and rubbish. At completion of work remove all rubbish from and about the building and leave the electrical systems clean and ready for use.

B. Final clean-up shall include washing of fixture lenses, switchboards, substations, transformers, motor control centers, distribution panels, lighting panels, etc., to remove shipping and/or construction dust and debris. Fixture reflectors and/or lenses with water marks or cleaning streaks will not be accepted.

END OF SECTION

Revision History	
Date	**Rev. No.**
A	0
B	0
D	0
E	0
F	0
02-19-09	0

EY/ca
C:\d\timsdatasf\BROOKHAVEN_NATIONAL_LABORATORY\SF070003\200-PROJEXEC\280-SPEC\16010.doc

SECTION 16025

ELECTRICAL SYSTEMS

PART 1 GENERAL

1.1 SUMMARY

A. Description Of Systems
1. Incoming Service to Site. 13,800 volts, 3 phase, 3 wire, 60 hertz, low resistance grounded system.
2. Service Entrance. 4160 volts, 3 phase, 3 wire, 60 hertz, neutral resistance grounded at the source.
3. Primary Distribution System. 480/277 volts, 3 phase, 4 wire, 60 hertz, ungrounded.
4. Primary System for Service to Large Motors: 4160 volts, 3 phase, 3 wire, 60 hertz or neutral solidly grounded.
5. Power System. 480 volts, 3 phase, 3 wire, 60 hertz, neutral solidly.
6. Lighting Systems. 480/277 volts, 3 phase, 4 wire, 60 hertz, solidly grounded neutral and 120/208 volts, 3 phase, 4 wire, 60 hertz, solidly grounded neutral
7. Small Power System. 120/208 volts, 3 phase, 4 wire, 60 hertz, solidly grounded neutral.
8. Emergency Lighting. 12 volt, DC battery operated.
9. Primary Switchgear Control Power. 125 volts AC, 2 wire.

B. Work Specified In 16000 Series Sections
1. Furnish all labor, materials, equipment, technical supervision, and incidental services required to complete, test and leave ready for operation the electrical systems as specified in the 16000 Series SECTIONS or as indicated.
2. Provide all power wiring, required for equipment specified under Article “RELATED WORK SPECIFIED UNDER OTHER SECTIONS” hereinafter.
3. Provide control wiring for all equipment/systems provided under these 16000 Series SECTIONS. In addition, within motor control centers and other 16000 Series SECTIONS electrical equipment/control panels, provide control devices and wiring as indicated (on the applicable CI drawing schematic diagrams).

C. Related Work Specified Under Other Sections
1. Excavating, trenching and backfilling for electrical work - SECTION 02300, except as specified in SECTIONS 16115, 16120 and 16402.
2. Furnishing and mounting of all electric motors – 08000, 11000 and 15000 Series SECTIONS.
3. Furnishing and mounting of starters, disconnect switches, remote and integral controls on “packaged” or “packaged self-contained” building service equipment, and furnishing and installing all power and control wiring on “packaged” or “packaged self-contained” building service equipment, except for power service – 08000 and 15000 Series SECTIONS, except as otherwise indicated.
4. Furnishing and mounting of disconnect switches on roof mounted exhaust fans; furnishing and installing conduit and wire between the disconnect switch and motor; and furnishing and installing service conduit within the fan housing between the disconnect

switch and a point approximately six inches below the roof line – 15000 Series SECTIONS.

5. Furnishing and installing field prime and finish painting – SECTION 09900, except as specified in SECTION 16400.
6. Furnishing, installing and wiring of control devices not contained within starters, motor control centers or packaged self contained equipment – SECTION 13800 (,except as shown on the applicable CI schematic drawings.)

D. Provided By Owner
1. Telephone equipment and wiring.

1.2 QUALITY ASSURANCE

A. Source Quality Control
1. Furnish equipment and materials listed by Underwriters' Laboratories, Inc., and bearing the UL Label wherever standards have been established and label service is regularly furnished. Furnish equipment and materials conforming to the latest standards of IEEE, ASTM, ANSI, ICEA and NEMA for equipment referenced to such standards in the CONTRACT DOCUMENTS. Latest current issue date to be prior to issue date of the CONTRACT DOCUMENTS. Furnish equipment and materials conforming to the requirements of the National Electrical Code and the requirements of the CONTRACT DOCUMENTS.

B. Field Quality Control
1. Install equipment and material in compliance with the regulations of Local, State and Governmental laws governing electrical installations, the latest edition of the National Electrical Code, NFPA and the requirements of the CONTRACT DOCUMENTS.

PART 2 PRODUCTS
(NOT USED)

PART 3 EXECUTION

3.1 GENERAL REQUIREMENTS

A. Contractor shall seal openings in fire rated wall with a material having the same rating as the wall.

B. Supply voltage, fuse sizes, breaker sizes, conduit and wire sizes shown on the DRAWING for equipment provided in other SECTIONS are based on design loads. Contractor shall verify and coordinate actual voltage requirements, horsepower, starting characteristics, and KVA loads for the actual equipment supplied and provide required power source, fuses, breakers, conduit and wire.

C. Contractor shall be responsible for coordinating space allocations with other equipment, orientation of equipment, floor and wall openings and interfacing with equipment.

D. Provide additional support for all bus plug-in units 200 amperes and larger.

E. Coordinate the installation of electrical equipment with other trades and field conditions to avoid interferences with duct work, piping, structural sway framing, and other electrical equipment.

F. Where mechanical and electrical utilities are installed in the truss area, coordinate support members and hanger rods prior to installation of equipment.

G. Contractor shall provide miscellaneous steel supports as required for mounting electrical equipment. Clamp to walls, floors or columns. Welding to the structural steel is prohibited.

H. Provide expansion fitting and expansion joints to all conduits, busways at building expansion joints.

I. All debris, grease and foreign material shall be cleaned from the interior and exterior of electrical equipment prior to any testing of equipment and prior to hand over to the owner.

J. All work to be done in existing areas shall have prior approval from the OWNER. Contractor shall notify owner of work to be scheduled in existing areas at least one week prior to commencement of work.

3.2 OWNER-FURNISHED EQUIPMENT INSTALLATION

A. Uncrate and examine all equipment furnished by the OWNER which is to be installed, and immediately notify the OWNER, in writing, of any damaged material or missing parts. Moving, erecting, or installing of any OWNER-furnished equipment shall be construed to indicate that it has been accepted in good condition; assume the responsibility and liability for its protection, unless it can be proven that any later-discovered damage is due to faulty workmanship or inferior material furnished by the manufacturer. Equipment includes the component parts thereof, necessary to the satisfactory and safe operation of the item.

B. Protect all materials and equipment from all damage from the time it is removed from the point of receipt or storage until acceptance by the OWNER.

C. All tolerances in leveling, alignment and vibration and other specific installation requirements for each classification of work shall be subject to manufacturer’s installation instructions.

D. Perform installation, assembly of items shipped “loose” by manufacturer including intercomponent wiring, field terminal hook-up, start-up, testing, debugging and related work based on approved shop drawings, and under the direction of an authorized representative of manufacturer.

3.3 DEMOLITION WORK

A. Demolition, alteration and extension of existing electrical systems shall conform to general requirements specified in SECTION 01100.

B. Where the DRAWINGS show existing electrical devices to be removed, this work shall include the removal of all conduit and wiring from the removed equipment back as far as is possible without disturbing other equipment remaining in service. Where it is not possible to remove wiring back to the source, wire ends shall be taped and coiled in a J-box or other enclosure (as permitted by the NEC) in the part of the wiring system that is to remain. Plug all holes left by removed conduits with plugs suitable for the type of enclosure. All equipment removed shall become the property of the Contractor, unless otherwise indicated on the DRAWINGS or elsewhere in these SPECIFICATIONS, and shall be promptly removed from the site.

C. Where the DRAWINGS show existing wiring systems to be rerouted, the Contractor shall replace the wiring systems being rerouted with identical, new wiring systems, utilizing the same type and size of wires. Where splicing is required, terminal blocks and ring type lugs shall be used for control wiring and compression terminals for power wiring.

D. No equipment shall be de-energized or taken out of service without prior written approval of the OWNERS REPRESENTATIVE. Provide temporary wiring as required for equipment that must remain in service during the time that permanent wiring system is being rerouted.

E. It shall be the responsibility of the Contractor to verify the sources and destination of all wiring systems shown on the Drawings to be rerouted. The Contractor shall also identify any wiring systems not shown on the Drawings that are required to be rerouted and advise the OWNERS REPRESENTATIVE as to the source and destination of these wiring systems as well as the sizes of conduits and sizes and quantities of wires or cables involved.

F. Where the DRAWINGS show existing fluorescent or HID lighting to be removed, the CONTRACTOR shall be responsible for the legally-proper disposal of all hazardous material, including lamps , - ballasts containing PCB and ballasts containing DEHP unless the OWNER has a hazardous material disposal facility. In such case, the CONTRACTOR shall coordinate with the OWNER to comply with the requirements of the OWNER’S disposal procedures. All ballasts which are not marked “non-PCB” shall be assumed to be PCB type. Ballasts which are marked “non-PCB” and not having a code letter indicating a dry film dielectric shall also be considered as hazardous waste. Housings from which lamps and ballasts have been removed may be treated as ordinary trash or scrap unless there is evidence that a PCB ballast has been leaking so that the entire unit, being contaminated, must be considered as hazardous material. Fixtures with clearly-marked “non-PCB” ballasts may be left intact (except for the lamps) for scrapping.

G. Contractor shall be responsible for all devices, supports and incidental equipment required for a complete and functional system.

END OF SECTION

Revision History	
Date	**Rev. No.**
A	0
B	0
D	0
E	0
F	0
02-19-09	0

JCB/ca
C:\d\timsdatasf\BROOKHAVEN_NATIONAL_LABORATORY\SF070003\200-PROJEXEC\280-SPEC\16025.doc

THIS PAGE INTENTIONALLY LEFT BLANK

SECTION 16050

BASIC MATERIALS AND METHODS

PART 1 GENERAL

1.1 SUMMARY

A. Description of System
   1. Provide raceway systems as required, and all equipment and material, including conduit, fittings, boxes, wireways, and cable trays, as indicated or specified.

1.2 SUBMITTALS

A. Furnish submittals for items that are identified in this SECTION by a different typeface and a bracketed code (e.g., *Item [L]*). Refer to SECTION 01340 for definition of codes for types of submittals and the administrative requirements governing submittal procedure. Additional submittal requirements pertaining to this SECTION are specified herein under this Article.

B. Include complete data on each item. Coordinate the items, as they relate to the work, prior to submittal.

1.3 OPERATION AND MAINTENANCE MANUALS

A. Provide, per SECTION 01730, Operation and Maintenance Manuals for systems and equipment.

PART 2 PRODUCTS

2.1 MATERIALS

A. Conduit
   1. Rigid Steel Conduit, Elbows, and Couplings: Zinc-coated threaded steel per ANSI C80.1 “Specification for Rigid Steel Conduit, Zinc-Coated”. Each length of conduit shall be threaded on both ends.
      a. Allied Tube and Conduit Corp.
      b. Condux International, Inc.
      c. Steelduct Conduit Products.
      d. Wheatland Tube and Conduit Corp.
      e. LTV Steel Tubular Products
   2. PVC Jacketed Rigid Steel Conduct, Elbows and Couplings:
      Zinc-coated threaded steel conduit per ANSI C80.1 “Specification for Rigid Steel Conduit, Zinc-Coated”, with an extruded black polyvinyl chloride coating, 40 mils thick, applied on the outside of the conduit. Each length of conduit shall be threaded on both ends.
      a. Electri-Flex Corp.

b. Robroy Industries

3. Electrical Metallic Tubing: Zinc-coated steel per ANSI C80.3 “Specification for Electrical Metallic Tubing, Zinc-Coated”.
   a. Allied Tube and Conduit Corp.
   b. Condux International, Inc.
   c. Steelduct Conduit Products.
   d. Wheatland Tube and Conduit Corp.
   e. LTV Steel Tubular Products
4. Flexible Metal Conduit: Per ANSI/UL 1, “Flexible Steel Conduit”.
   a. Anamet, Inc.
   b. Condux International, Inc.
   c. Electri-Flex Corp.
5. Liquid-Tight Flexible Steel Conduit: Per ANSI/UL 360, “Steel Conduits, Liquid-Tight Flexible”, with a PVC jacket.
   a. Anamet, Inc. “Sealtite Type UA only”
   b. Electri-Flex Corp.
   c. Thomas & Betts

B. Conduit Fittings
1. Outlet Bodies for Rigid Steel Conduit: Cast or malleable iron bodies, zinc-plated, with taper threads, screw attached cover plates, and gaskets when located in areas requiring gaskets as specified in ARTICLE “INSTALLATION”.
   a. Appleton Form 35
   b. Crouse-Hinds Form 8
   c. O-Z/Gedney Form 7
2. Expansion Fittings for Rigid Steel Conduit: Cast or malleable iron bodies, with threaded end caps for receiving fixed and movable conduits, metallic pressure packing and copper bonding jumper assembly, and providing for a minimum of 2 inch movement of the conduit in either direction.
   a. Appleton Type XJ
   b. Crouse-Hinds Type XJ
   c. O-Z/Gedney Type AX
3. Conduit Bodies for PVC Jacketed Rigid Steel Conduit: As specified for rigid steel conduit and with a 40 mil PVC coating on the outside.
   a. Robroy Industries
   b. Electri-Flex Corp.
4. Couplings and Connectors for EMT: Zinc-plated steel, compression or set screw type.
   a. Appleton
   b. Midwest Electric Product/Crouse-Hinds Company
   c. Raco
   d. Thomas & Betts
5. Conduit Unions; On Continuous Run:
   a. Appleton
   b. O-Z/Gedney
   c. Raco

6. Fittings for Flexible Steel Conduit: Malleable iron or steel, zinc plated, securing the conduit by clamping action around the periphery of the conduit. Do not furnish fittings that anchor the conduit by means of set screws.
    a. Appleton
    b. Steel City
    c. Thomas & Betts
7. Fittings for Liquid-Tight Flexible Steel Conduit: Designed to maintain the liquid-tight feature of the installation.
    a. Appleton ST Series
    b. Ideal Industries 75 Series
    c. Thomas & Betts 5000 Series
8. Locknuts for Rigid Steel Conduit: Malleable iron or steel, zinc plated.
9. Locknuts; for rigid steel conduit terminated in threadless openings; gasketed sealing locknuts.
    a. Appleton BLS Series
    b. Crouse-Hinds SL Series
    c. Raco 150SL Series
10. Bushings; for 1 Inch and Smaller Rigid Steel Conduits. Insulating plastic type of nonburnable thermosetting phenolic, conforming to Underwriters' Laboratories requirements. Do not furnish nonrigid plastic bushings.
11. Bushings; for 1-1/4 Inch and Larger Rigid Steel Conduits. Malleable iron or steel, zinc plated, with insulating insert of thermosetting plastic as specified for smaller conduit bushings, molded and locked into the bushing ring.
12. Bushings; for conduits terminated in threadless opening; threaded hub with watertight seal.
    a. Appleton HUB Series
    b. Meyer ST Series
    c. Raco 40 Series
    d. Thomas & Betts H Series

C. Outlet Boxes
1. Sheet Steel Boxes: Galvanized stock not less than No. 14 gage, with knockout openings, single or multiple gang, with extensions, adapters, plaster rings, tile covers, fixture studs and cover plates. Furnish accessories with same gage and finish as specified for boxes, except where special finishes are specified for covers and device plates in SECTION 16121. Provide sizes per NEC requirements for wiring space, except where minimum sizes are specified under ARTICLE "INSTALLATION".
    a. Appleton
    b. Raco, Inc.
    c. Steel City
2. Cast or Malleable Iron Boxes: Galvanized, single or multiple gang, with taper threaded hubs, adapters and cover plates. Furnish cast metal, galvanized accessories, except where special device plates are specified in SECTION 16121. Furnish gaskets when located in areas requiring gaskets as specified in ARTICLE "INSTALLATION". Provide sizes per NEC requirements for wiring space, except where minimum sizes are specified under ARTICLE "INSTALLATION".
    a. Appleton
    b. Crouse-Hinds

c. Pyle-National
d. O-Z/Gedney

D. Pull And Junction Boxes
1. Boxes Less than 5 Inches by 5 Inches. Conform to paragraph “OUTLET BOXES”.
2. Sheet Metal Boxes: Code gage, full seam welded with bent-in flanges seam welded at corner joints, screw fastened cover of same gage as box. Fasten cover with brass or stainless steel machine screws. Galvanize box and cover after fabrication. Provide sizes conforming to NEC requirements for wiring space, except where boxes of larger size are indicated. Furnish gaskets when located in areas requiring gaskets as specified in ARTICLE “INSTALLATION”.
3. Cast or Malleable Iron Boxes: Code gage, with threaded hubs or conduit bosses for field drilling and tapping, screw fastened cover of same gage as box. Fasten cover with brass or stainless steel machine screws. Galvanize box and cover after fabrication. Provide sizes conforming to NEC requirements for wiring space, except where boxes of larger size are indicated. Furnish gaskets when located in areas requiring gaskets as specified in ARTICLE “INSTALLATION”.
   a. Appleton
   b. Crouse-Hinds
   c. O-Z/Gedney

E. Wireways
1. *Wireways [U]*: Painted steel enclosure with hinged or screw fastened cover, bends, elbows, tees, crosses, adapters and accessories as required, easily assembled into a complete system. Provide sizes per NEC requirements for wiring space, except where larger sizes are indicated. Furnish gaskets when located in areas requiring gaskets as specified in Article, “INSTALLATION” for outlet boxes.
   a. Hoffman
   b. Keystone
   c. Square D

F. Miscellaneous
1. *Trapeze Hangers Support Channel [U]*: Shall be pregalvanized continuous C channel, 1-5/8” nominal. All associated hardware shall match support channel manufacturer.
   a. Kindorf
   b. Powerstrut
   c. Unistrut
   d. B-Line
   e. GS Metals
2. Joint Compound:
   a. Thomas & Betts “KopR-Shield” or “AlumA-Shield”
3. Rubber Calking:
   a. G. E. “Silicone”
   b. Dap, Inc. “Flexseal Two-Part Polysulfide Sealant”
   c. Pecora Corp. “GC-S Synthacaulk”
   d. Sonneborn “Sonolastic Two Part”
4. Fire-Barrier Calking:
   a. 3-M “CP25” and “Putty 303”

b. Nelson FSP Firestop Putty and Nelson CMP Firestop Compound
c. International Protective Coatings Corporation “Flamesafe” products.

5. Wire Identification Labels [U]:
   a. Brady
   b. Panduit
   c. Thomas & Betts
6. *Metallic Detection Tape [U]*: Non-adhesive, 0.035 inch, non-ferric metallized, 2 inch wide for burial at 4-6 inches below surface or 6 inch wide for deeper burial, polyethylene with **“Buried Electric Line Below”** wording and red color to assure visible detection.
   a. Seton Identification Products
7. *Underground Hazard Tape [U]*: Non-adhesive, 4 mil, polyethylene, 3 inch wide, black letters on red background with legend “CAUTION - ELECTRIC LINE BURIED BELOW”.
   a. Panduit
   b. Stranco Products, Inc.
   c. Thomas & Betts
   d. Seton Identification Products

PART 3 EXECUTION

3.1 INSTALLATION

A. Conduit Systems
1. Install rigid steel conduit in general in all applications, except as otherwise specified or indicated. Use electrical metallic tubing, unless noted otherwise, in lieu of rigid steel conduit in concealed dry locations in office and similar finished areas. Do not use EMT in concrete floors in contact with earth, underground, or in utility areas.
2. Install flexible conduit for service to individual recessed fixtures, 1/2 inch minimum size, and for final connection to distribution transformers and other equipment subject to vibration or movement. Use liquid tight type of flexible conduit in damp or wet locations and for final connections to all motors.
3. Install conduit systems as indicated, as required by the NEC, and as specified. Install conduit sizes as indicated. Where conduit sizes are not indicated, install sizes per NEC requirements, except do not use conduit sizes smaller than 3/4 inch unless otherwise specified. Use 1/2 inch fixture stems unless otherwise indicated.
4. Install conduit concealed in office and similar finished areas, and exposed in all other areas unless otherwise indicated or specified.
5. Use PVC jacketed rigid conduit in corrosive areas as indicated.
6. Install exposed conduit runs level and plumb parallel or perpendicular to walls, structural members, or intersections of vertical planes and ceilings. Keep conduit at least six inches away from parallel runs of high temperature surfaces, such as steam or hot water pipes and do not run conduit directly under cold water lines.
7. Encase conduit laid in earth below floor slabs, or in earth external to foundation walls and within 5 feet of same, with a 3 inch minimum concrete envelope around the conduit.
8. Install hazard warning tape directly above conduit or duct bank and located 12 inches below finished grade. Where conduit is installed below finished floor slab, warning tape shall be placed within the top 4 inches below the slab.

9. Group conduit for common support, where indicated and elsewhere as directed by the ARCHITECT-ENGINEER.
10. Do not install crushed or deformed conduits and avoid trapped runs in damp or wet locations. Take care to prevent the entrance of water and the lodging of concrete, plaster, dirt or trash in conduit, boxes, fittings and equipment during the course of construction. Free conduit of obstructions or replace the conduits. Where conduit joints occur in concrete slabs, or in damp or wet locations, make joints watertight by applying an approved compound on the entire thread area before assembling. Draw up all conduit joints as tightly as possible. Cap exposed empty conduits which do not terminate in outlets, panels, cabinets, etc. with standard galvanized malleable iron pipe caps. Plug empty conduits which terminate flush with floors or walls with flush coupling and galvanized malleable plug. Coat the threads of pipe caps and plugs with anti-corrosive joint compound.
11. Install conduit sleeves for all exposed conduits and cables passing through walls, ceilings or floors, and fill the void between sleeve and conduit with rubber calking flush with the end of the sleeve to seal the opening; where fire rating is required, use fire-barrier calking.
12. Terminate conduit stubbed up through concrete floors for connections to free standing equipment with a coupling flush with finish floor and extend rigid conduit to equipment, except that where required, use flexible conduit from a point 6 inches above the floor.
13. Make changes in direction of runs with symmetrical bends, fittings or pull boxes. Do not use bends around outside corners; use fittings for same. Install elbows, bends and offsets having a minimum radius of curvature of 24 inches for 2 inch and 2-1/2 inch conduit, and 36 inches for 3 inch and larger conduit. Except where conduit runs are shown in exact detail, install pull points at not greater than 200 foot intervals in straight runs. Where bends are included between pull points, reduce this maximum permissible 200 foot separation between pull points by 50 feet for each 90 degree bend and 25 feet for each 45 degree bend. Figure deductions for all other angle bends on a similar basis. When bends are made in the field, make bends with an approved hickey or conduit bending machine. Make bends in 1-1/4 inch and larger conduits with standard conduit ells where possible.
14. Provide conduit nipples with two independent sets of threads. Do not use running threads on any part of the conduit system. Where conditions require joining two fixed conduits into a continuous run, use a conduit union, in place of running threads and coupling.
15. Install expansion fittings in exposed conduit runs of lengths greater than 200 feet, at each crossing of building expansion joints, and elsewhere as indicated.
16. Coat conduit threads in PVC jacketed rigid steel conduit with joint compound.
17. Install double locknuts and bushings on all rigid conduit terminations into threadless openings. Increase length of conduit threads at terminations sufficiently to permit the bushing to be fully seated against the end of the conduit. Use a threaded hub with watertight seal or a gasketed sealing locknut on all NEMA 12 applications and for all distribution boxes. Threads shall be per manufacturer's recommendation.
18. Use one hole malleable iron galvanized pipe straps for support of single conduits, or clevis type hangers. Support groups of conduit on trapeze hangers. Use threaded rod or pipe for hanger support. Do not use perforated strap or wire for conduit or hanger support. Use beam clamps of malleable iron or wrought steel with hook rods to grip the beam flange for conduit or hanger support; do not use C-clamp type fittings unless otherwise indicated on DRAWINGS. Support exposed conduit at least every 8 feet if smaller than 2 inch, and every 10 feet if 2 inch and larger unless otherwise noted.

19. Install nylon pull wire in empty conduits.

B. Outlet And Switch Boxes
1. Outlet Boxes for Use with Rigid Steel Conduit in Nonhazardous Areas. Sheet steel for flush or concealed work in dry locations; cast or malleable iron in exposed, or damp or wet locations. Do not use sheet steel outlet boxes in utility or factory type areas.
2. Outlet Boxes for Use with Electrical Metallic Tubing. Sheet steel for flush or concealed work; cast or malleable iron for exposed locations.
3. Flush Mounted Boxes. For single outlets, use boxes not less than 4 inches square and 2-1/8 inches deep. For multiple outlets, use gang type boxes not less than 2-1/4 inches deep. Furnish plaster rings not less than 1-1/4 inches deep. In masonry walls use masonry boxes. For ceiling outlets in concrete slabs, use boxes not less than 3 inches deep.
4. Gaskets. Provide cover gaskets for boxes in damp or wet locations.
5. Install boxes in the wiring or raceway systems as required for pulling of wires, making connections, and mounting of devices and fixtures.
6. Install extension rings, adapters, raised covers and plaster rings on flush mounted boxes as required. Equip flush mounted boxes in masonry block or tile walls with tile covers.
7. Install separate concealed boxes for semi-flush or recessed fixtures when required by the fixture terminal operating temperature. Make boxes readily accessible on removal of the fixture or provide ceiling access panels as approved by the ARCHITECT-ENGINEER.
8. Locate outlets in offices and other finished areas with due regard for the finish and interior architectural treatment so that outlets are centered with respect to panels, joints or moldings, and so that plaster rings, frames and tile covers are properly located with respect to the finished surface.
9. Install outlets for wall switches controlling lighting on the latch side of door where possible.
10. Support boxes independent of conduit and secure rigidly in place. Install boxes used for fixture support such that they are capable of carrying 100 pounds.
11. In concrete, anchor boxes securely to reinforcing steel and to forms to prevent shifting when concrete is placed.
12. Above suspended ceilings, support boxes independent of the ceiling; fasten boxes to the ceiling support system by bar hanger or similar support.

C. Junction And Pull Boxes
1. Junction and Pull Boxes for use with Rigid Steel Conduit or Electrical Metallic Tubing in Non-Hazardous Areas. Sheet steel for exposed or flush work in dry locations; sheet steel with cover gaskets for work in dry locations of utility and factory areas; cast or malleable iron with cover gasket in damp or wet locations.
2. Junction and Pull Boxes for use with Rigid Steel conduit in concrete. Cast iron with reinforced cover and sealing gasket flush mounted in light traffic areas.

D. Wireways
1. Install wireways at locations indicated. Where wireways are located on surfaces, do not install wireway in contact with such surfaces; support wireways with not less than 1/4 inch separation from the surface.
2. Provide supports at a maximum of 5 foot intervals.

3. Where pendent supports are indicated or required, provide 1/2 inch diameter threaded rods with beam clamps as specified for conduit supports. Provide lateral bracing at intervals not greater than 10 feet.

E. Equipment Identifications
   1. Provide identification labels for electrical equipment as indicated in Appendix "A" of this section.

END OF SECTION

Revision History	
Date	**Rev. No.**
A	0
B	0
D	0
E	0
F	0
02-19-09	0

EY/ca
C:\d\timsdatasf\BROOKHAVEN_NATIONAL_LABORATORY\SF070003\200-PROJEXEC\280-SPEC\16050.doc

SECTION 16050A

APPENDIX A - NAMPLATES AND LABELS

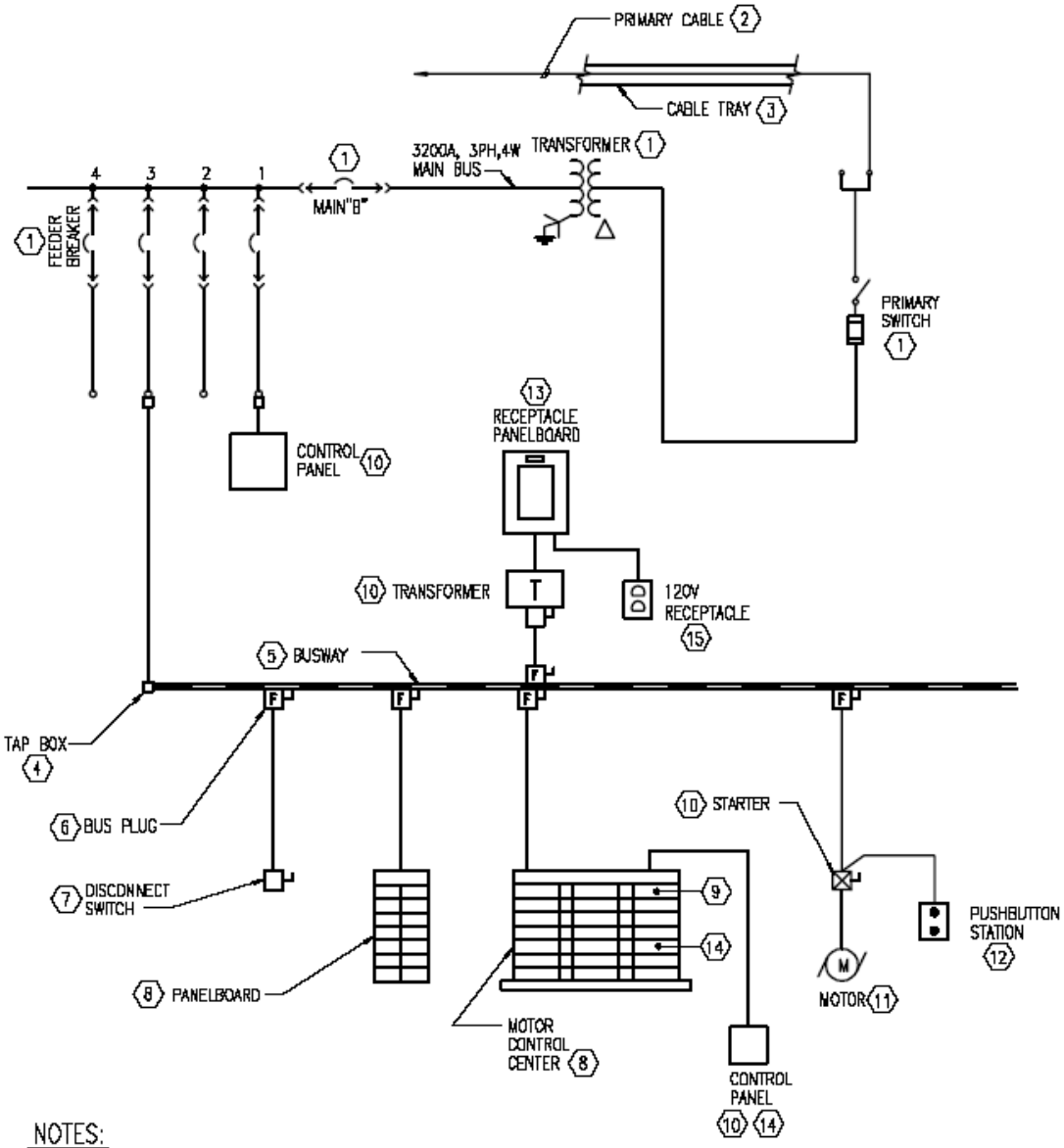

NOTES:

1. REFER TO SHEETS 16050-APP. A-2 THROUGH 10 FOR NAMEPLATE TYPE AND WORDING REQUIRED AT EACH DEVICE NUMBER ⬡.
2. REFER TO SHEETS 16050-APP. A-11 AND 12 FOR DETAILS OF NAMEPLATE TYPES.
3. ALL NAMEPLATES INSTALLED INDOORS SHALL BE BLACK NAMEPLATES WITH WHITE LETTERS AND ALL NAMEPLATES INSTALLED OUTDOORS SHALL BE WHITE NAMEPLATES WITH BLACK LETTERS.

(1) SUBSTATION PRIMARY SWITCHES, TRANSFORMER, MAIN AND FEEDER BREAKER IDENTIFICATION SHALL BE PROVIDED BY THE MANUFACTURER. NAMEPLATES SHALL BE AS FOLLOWS:

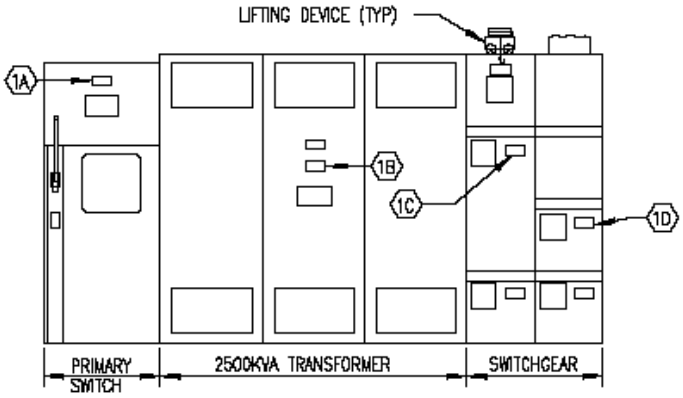

SUBSTATION SUB-600-2

(1A) (NP: TYPE 1)

PRIMARY SWITCH	DEVICE NAME
SUB-600-2	DEVICE LOCATION

(1B) (NP: TYPE 1)

2500KVA TRANSFORMER	DEVICE NAME
SUB-600-2	DEVICE LOCATION

(1C) (NP: TYPE 1)

MAIN BREAKER	DEVICE NAME
SUB-600-2	DEVICE LOCATION

(1D) (NP: TYPE 1)

1000A FEEDER BKR	DEVICE SIZE & NAME
BUSWAY BW-600-4	LOAD SERVED

(2) MEDIUM VOLTAGE CABLE SHALL BE IDENTIFIED IN MANHOLES, CABLE TRAY, CABLE VAULTS, SPLICES AND TERMINATIONS, ETC. UTILIZE TY-WRAPS TO ATTACH IDENTIFICATION OF CABLES. CABLE IDENTIFICATION SHALL INCLUDE THE FEEDER SOURCE. TAGS SHALL BE AS SHOWN BELOW. TAGS SHALL BE PLACED WHENEVER A CABLE ENTERS A SUBSTATION ROOM, WHERE IT ENTERS A SWITCHGEAR ENCLOSURE, INSIDE A SWITCHGEAR ENCLOSURE, AT EACH SPLICE AND TAP LOCATION, AND IN CABLE TRAY (100 FOOT MAXIMUM INTERVALS).

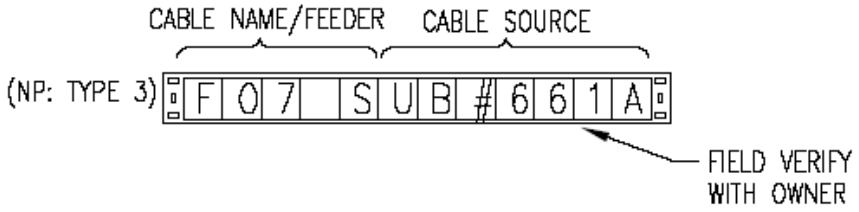

(3) CABLE TRAY IDENTIFICATION LABELS SHALL BE APPLIED TO THE FACE OF THE CABLE TRAY SIDE RAIL AT INTERVALS NOT EXCEEDING 64 FEET ON BOTH SIDES OF TRAY. PROVIDE ADDITIONAL IDENTIFICATION LABELS ON BOTH SIDES OF WALL, FLOOR AND DRAFT CURTAIN PENETRATIONS, WITHIN 10 FEET OF ALL CHANGES IN DIRECTION AND ALL CABLE TRAY TERMINATIONS. IDENTIFICATION LABELS SHALL BE WORDED AS FOLLOWS:

SIGNAL	BLACK LETTERS ON WHITE BACKGROUND
STANDBY 480V	BLACK LETTERS ON YELLOW BACKGROUND
NORMAL 480V	BLACK LETTERS ON WHITE BACKGROUND
NORMAL 15KV	BLACK LETTERS ON WHITE BACKGROUND
STANDBY 15KV	BLACK LETTERS ON YELLOW BACKGROUND
LOOP 15KV	BLACK LETTERS ON YELLOW BACKGROUND

IDENTIFICATION TAGS SHALL BE 4 1/2" WIDE, WITH 2 1/2" LETTER. COLORS SHALL BE AS SPECIFIED ABOVE. LABELS SHALL BE MADE OF PRESSURE SENSITIVE VINYL, WITH UV RESISTANT LETTERS. LABELS SHALL BE OPTI-CODE, AS MANUFACTURED BY SETON, OR EQUAL.

(4) TAP BOX IDENTIFICATION SHALL BE AS FOLLOWS:.

TB-600-4	DEVICE NAME
SUB-600-2	SOURCE OF POWER

LETTERS SHALL BE AS DESCRIBED IN (3) WITH WHITE LETTERS ON BLACK BACKGROUND.

(5) BUS DUCT IDENTIFICATION LABELS SHALL BE PROVIDED AT INTERVALS NOT EXCEEDING 64 FEET. PROVIDE ADDITIONAL IDENTIFICATION LABELS ON BOTH SIDES OF WALL, FLOOR AND DRAFT CURTAIN PARTITIONS, WITHIN 10 FEET OF ALL CHANGES IN DIRECTION AND AT ALL BUS DUCT TERMINATIONS. WORDING OF IDENTIFICATION LABEL SHALL BE:

BW-600-4	BUS DUCT NAME
1000A	BUS DUCT RATING

SEE PAGES 16050-APP.A-9 & 10 FOR FABRICATION AND MOUNTING DETAILS OF BUS DUCT IDENTIFICATION LABELS

(6) BUS PLUG IDENTIFICATION SHALL BE AS FOLLOWS:.

CHP-5	DEVICE BEING SERVED
400A, 3P, 480V	BUS PLUG RATING

LETTERS SHALL BE AS DESCRIBED IN (3) WITH WHITE LETTERS ON BLACK BACKGROUND.

7 IDENTIFICATION LABELS FOR DISCONNECT SWITCHES SHALL BE:

(TYPE 1)

CHP-5	DEVICE NAME
FED FROM: BW-600-4	POWER SOURCE

8 9 IDENTIFICATION OF PANELBOARDS AND MOTOR CONTROL CENTERS SHALL BE:

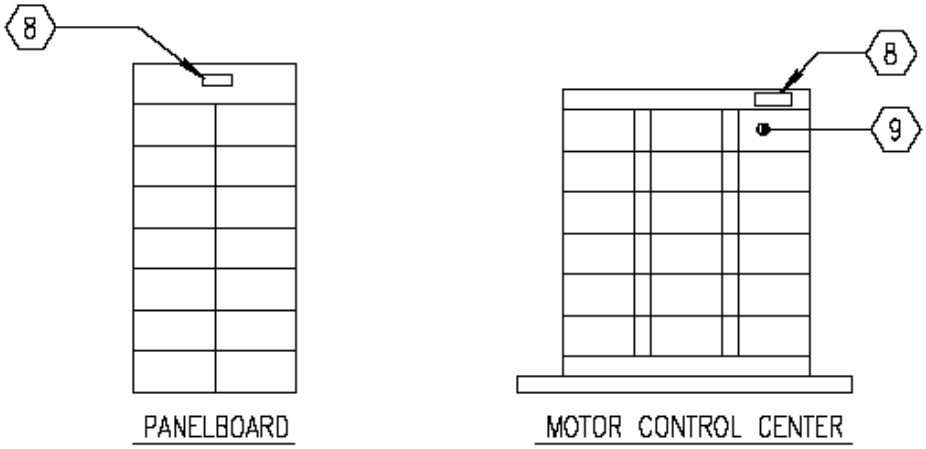

8

(TYPE 2)

MCC-600-3	DEVICE NAME
800A, 480V, 3PH, 4W	DEVICE RATING
FED FROM: SUB-600-2	POWER SOURCE

(NOTE: PANELBOARD SHALL BE PROVIDED WITH A DIRECTORY FILLED IN TO REFLECT AS - BUILT CONDITIONS. THE DIRECTORY SHALL BE TYPED.)

9

(TYPE 1)

EF-6	DEVICE NAME
ROOF	DEVICE LOCATION

(10) IDENTIFICATION LABELS FOR STARTERS, COMBINATION STARTERS CONTACTORS, TRANSFORMERS, CONTROL PANELS, CAPACITORS, ETC., SHALL BE:

(TYPE 1)

EF-7	DEVICE NAME
FED FROM: MCC-600-4	POWER SOURCE

(11) IDENTIFICATION LABELS FOR MOTORS SHALL BE:

(TYPE 2)

EF-7	DEVICE NAME
FED FROM: MCC-600-4	POWER SOURCE
EXPLOSION PROOF	SPECIAL REQUIREMENTS (WHERE APPLICABLE)

(12) IDENTIFICATION LABELS FOR PUSHBUTTONS, CONTROL SWITCHES, ETC. SHALL BE:

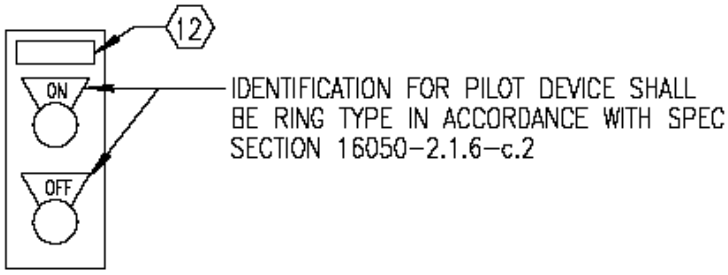

(12)
(TYPE 4)

EF-7	DEVICE NAME

(13) IDENTIFICATION FOR LIGHTING PANELBOARDS SHALL BE:

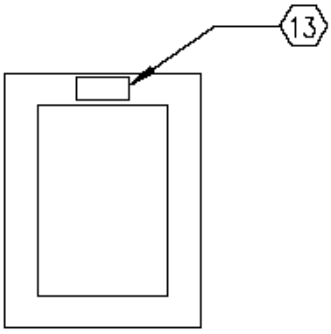

(13)
(TYPE 2)

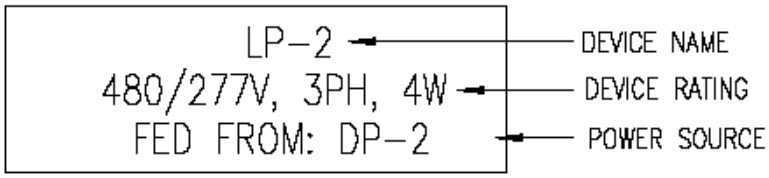

(NOTE: PANELBOARD SHALL BE PROVIDED WITH A DIRECTORY FILLED IN TO REFLECT AS-BUILT CONDITIONS. THE DIRECTORY SHALL BE TYPED.

(14) INTERLOCK CIRCUITRY AND SEPARATELY SUPPLIED CIRCUITS SHALL BE IDENTIFIED AS FOLLOWS:

1. ALL CONTROL PANEL ENCLOSURES WHICH CONTAIN INTERLOCK CIRCUITRY SHALL HAVE A YELLOW WARNING LABEL ON THE OUTSIDE OF THE CONTROL PANEL DOOR ADJACENT TO THE MAIN DISCONNECT THAT STATES" CAUTION: YELLOW WIRE IS NOT DE-ENERGIZED BY THE MAIN DISCONNECT"
2. TERMINAL BOXES CONTAINING INTERLOCK WIRING SHALL HAVE A WARNING LABEL ON THE COVER WHICH STATES"CAUTION: SEPARATELY ENERGIZED INTERLOCK WIRING INSIDE."
3. DEVICES CONNNECTED TO THE LINE SIDE OF THE MAIN DISCONNECT SHALL HAVE A WARNING SIGN STATING: "CAUTION: 480V SEPARATE SUPPLY - NOT DE-ENERGIZED BY THE MAIN DISCONNECT".

"CAUTION" LABELS SHALL BE 2 1/2" X 1 3/4", MADE OF FLEXIBLE PRESSURE SENSITIVE VINYL, AND CONFORM TO OSHA CAUTION SPECS.
"CAUTION" LABELS SHALL BE YELLOW, WITH BLACK DESCRIPTIVE LETTERING.
CAUTION LABELS SHALL BE AS MANUFACTURED BY SETON, OR EQUAL.

(13) IDENTIFICATION FOR RECEPTACLE PANELBOARDS SHALL BE:

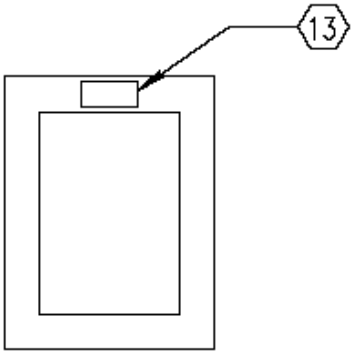

(13)
(TYPE 2)

RP-4	DEVICE NAME
208Y/120V, 3PH, 4W	DEVICE RATING
FED FROM: DP-2	POWER SOURCE

(NOTE: PANELBOARD SHALL BE PROVIDED WITH A DIRECTORY FILLED IN TO REFLECT AS-BUILT CONDITIONS. THE DIRECTORY SHALL BE TYPED.

(14) INTERLOCK CIRCUITRY AND SEPARATELY SUPPLIED CIRCUITS SHALL BE IDENTIFIED AS FOLLOWS:

1. ALL CONTROL PANEL ENCLOSURES WHICH CONTAIN INTERLOCK CIRCUITRY SHALL HAVE A YELLOW WARNING LABEL ON THE OUTSIDE OF THE CONTROL PANEL DOOR ADJACENT TO THE MAIN DISCONNECT THAT STATES" CAUTION: YELLOW WIRE IS NOT DE-ENERGIZED BY THE MAIN DISCONNECT"
2. TERMINAL BOXES CONTAINING INTERLOCK WIRING SHALL HAVE A WARNING LABEL ON THE COVER WHICH STATES"CAUTION: SEPARATELY ENERGIZED INTERLOCK WIRING INSIDE."
3. DEVICES CONNNECTED TO THE LINE SIDE OF THE MAIN DISCONNECT SHALL HAVE A WARNING SIGN STATING: "CAUTION: 480V SEPARATE SUPPLY – NOT DE-ENERGIZED BY THE MAIN DISCONNECT".

"CAUTION" LABELS SHALL BE 2 1/2" X 1 3/4", MADE OF FLEXIBLE PRESSURE SENSITIVE VINYL, AND CONFORM TO OSHA CAUTION SPECS.
"CAUTION" LABELS SHALL BE YELLOW, WITH BLACK DESCRIPTIVE LETTERING.
CAUTION LABELS SHALL BE AS MANUFACTURED BY SETON, OR EQUAL.

15 IDENTIFICATION LABELS FOR 120V RECEPTACLES SHALL BE:

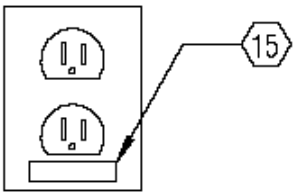

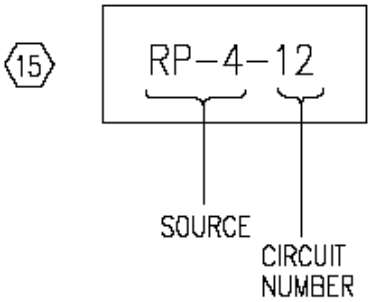

NAMEPLATE MATERIAL: EMBOSSED PRESSURE SENSITIVE "DYMO" LABEL, 3/8" WIDE

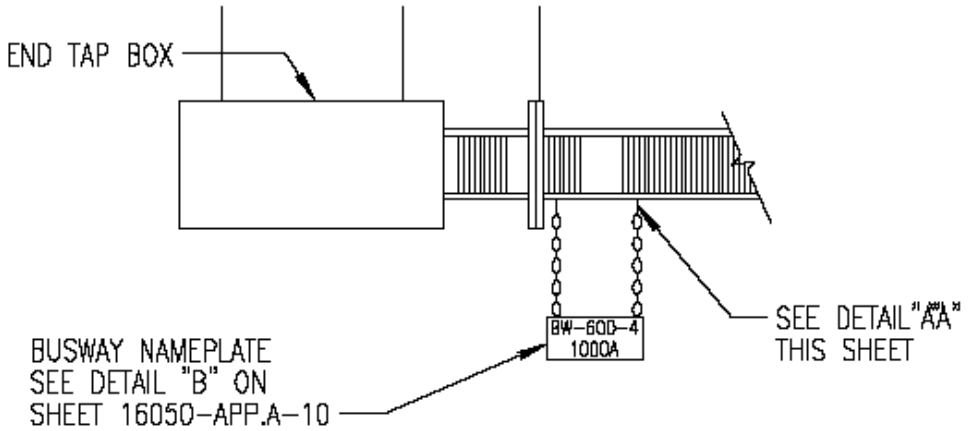

BUSWAY IDENTIFICATION

NOT TO SCALE

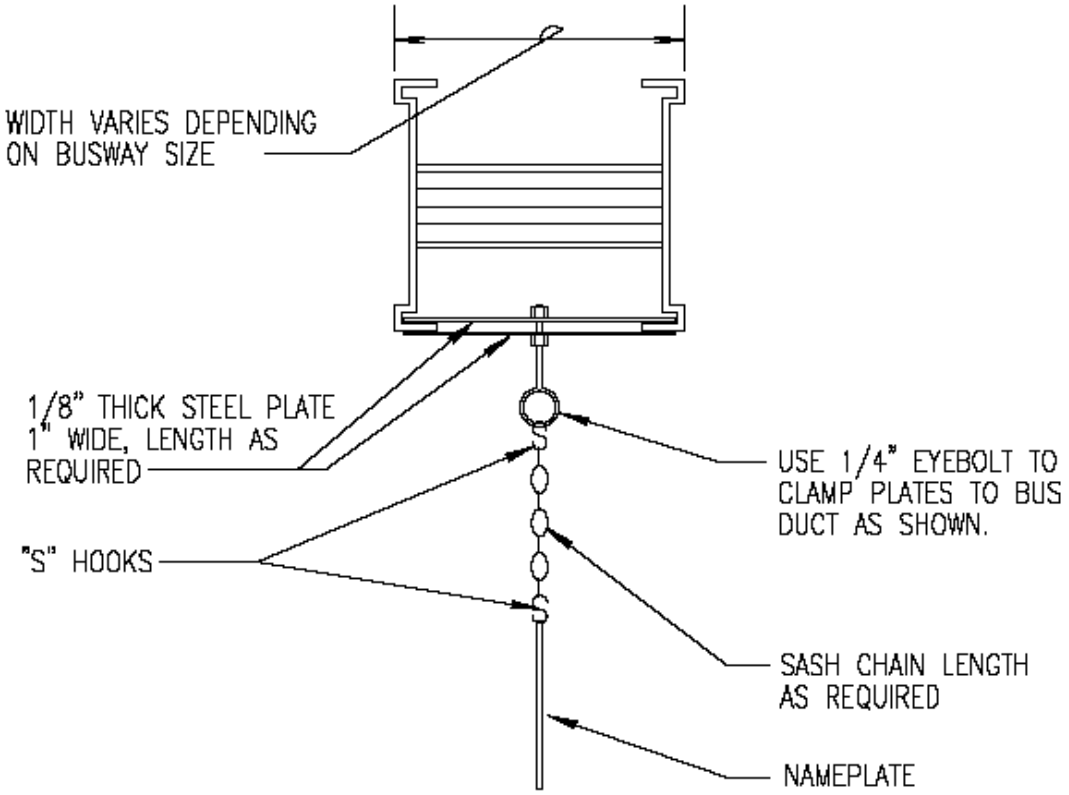

DETAIL "A"

NOT TO SCALE

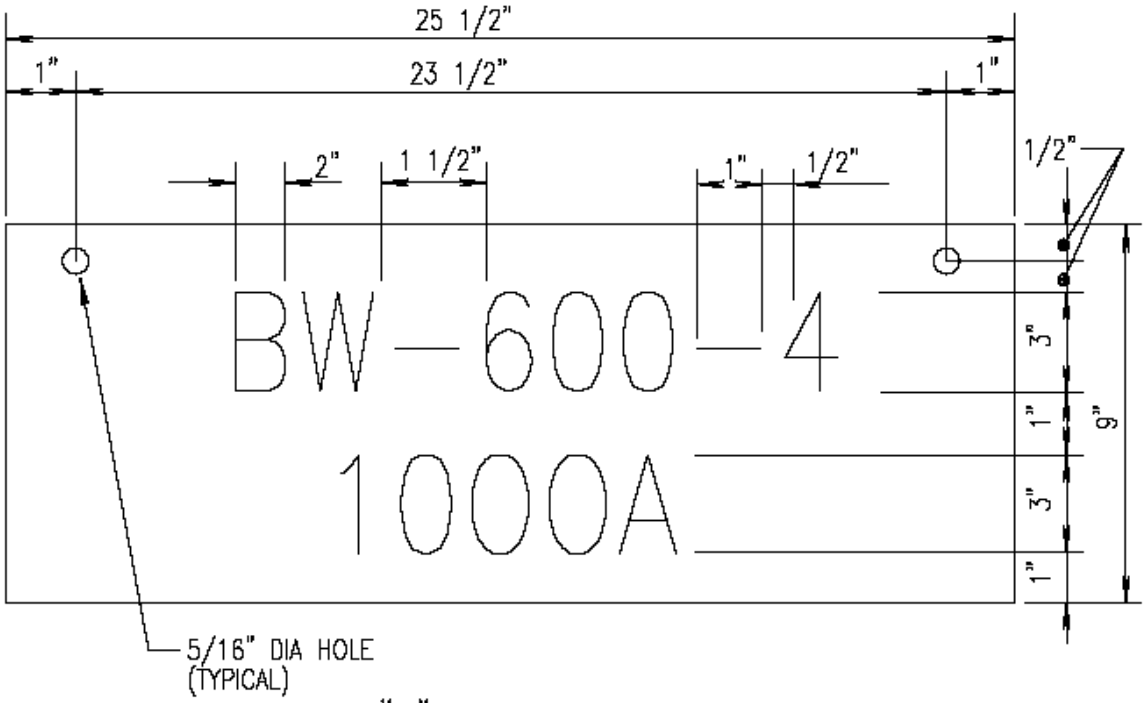

DETAIL "B" BUSWAY NAMEPLATE

NOT TO SCALE

NOTES

1. ALL IDENTIFICATION NAMEPLATES SHALL BE FABRICATED FROM EXTRUDED "ABS" SHEET. SHEET SHALL BE 0.125" THICK AND BLACK IN COLOR.
2. ALL CHAINS USED TO HANG NAMEPLATES SHALL BE GALVANIZED STEEL, WELDLESS SASH CHAIN, TRADE SIZE 35.
3. "S" HOOKS SHALL BE STEEL, 1 1/2" LONG, FIGURE 41-S GERWIN, BRIGHT FINISH, 1/8" WIRE SIZE.
4. LETTERS AND NUMBERS SHALL BE PAINTED ON SHEET (OR DECALS) USING"ADVANCE-EXELLO" MULTI-VAC ACRYLIC INK, WHITE.
5. NAMEPLATES SHALL HAVE THE NAMEPLATE INFORMATION SHOWN ON BOTH SIDES.
6. HANG BUSWAY NAMEPLATES FROM BUSWAY AS SHOWN. CLOSE-UP BOTH OPENINGS OF "S" HOOK AFTER INSTALLATION..

NAMEPLATE TYPES

TYPE 1

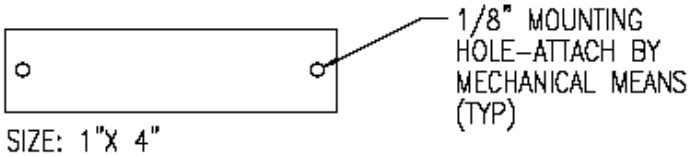

SIZE: 1"X 4"
CHARACTER SIZE: 3/16"
CHARACTERS PER LINE: 22
NO. OF LINES: 2
WHITE LETTERS ON BLACK BACKGROUND
MATERIAL: ENGRAVED PLASTIC
MANUFACTURER: SETON "SETONPLY" OR EQUAL

TYPE 2

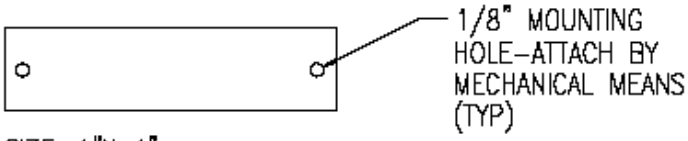

SIZE: 1"X 4"
CHARACTER SIZE: 3/16"
CHARACTERS PER LINE: 22
NO. OF LINES: 3
WHITE LETTERS ON BLACK BACKGROUND
MATERIAL: ENGRAVED PLASTIC
MANUFACTURER: SETON "SETONPLY" OR EQUAL

TYPE 3

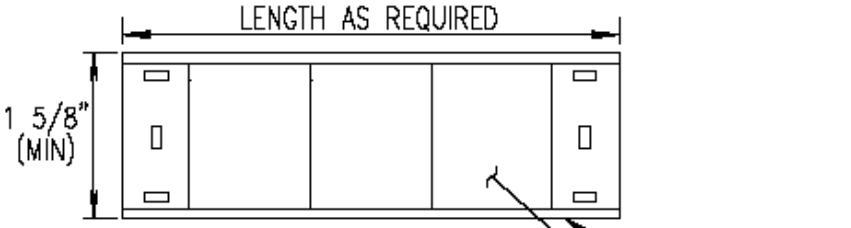

SIZE: AS NOTED
CHARACTER SIZE: 1.0" (MIN)
CHARACTERS PER LINE: AS REQUIRED
NO. OF LINES: 1
BLACK LETTERS ON YELLOW BACKGROUND

TAG HOLDER

LETTER TAG
(TYP)

MATERIAL: 0.030" THICK POLYETHYLENE DEEPLY STAMPED WITH UV AND CHEMICAL PROTECTION. FURNISH WITH UV BLACK POLYETHYLENE TAG HOLDER.
MANUFACTURER: ALMETEK "E–Z TAGS" WITH EZ–H9 LETTER STYLE, OR EQUAL

NAMEPLATE TYPES

TYPE 4

SIZE: 1/2" X 2"
CHARACTER SIZE: 1/8"
CHARACTERS PER LINE: 11
NO. OF LINES: 2
WHITE LETTERS ON BLACK BACKGROUND
NOTE: FURNISH WITH ADHESIVE BACKING
MATERIAL: ENGRAVED PLASTIC
MANUFACTURER: SETON "SETONPLY" OR EQUAL

TYPE 5

WHITE LETTERS ON BLACK BACKGROUND
MATERIAL: EMBOSSED PRESSURE SENSITIVE
"DYMO" LABEL, 3/8" WIDE.

COLOR CODING AND CONDUCTOR IDENTIFICATION

A. Provide single conductor cables having black insulation for power feeders and sub–feeders. Do not color code these circuits. Identify individual feeder and sub–feeder conductors as to phase connection A, B, C by means of wire labels at each splice and termination.

B. Identify each control circuit wire at each termination by means of wire labels. Provide identification as indicated. Mark the white marking strip of all control terminal blocks with the same identification as the connecting wire in permanent black ink.

WIRE AND CABLE IDENTIFICATION SCHEME

FEEDER AND SUB–FEEDER

VOLTAGE / PHASE	15KV	5KV	480/277V		208/120V
			POWER	LIGHTING	
A	LETTER "A"	LETTER "A"	LETTER "A"	BROWN	BLACK
B	LETTER "B"	LETTER "B"	LETTER "B"	ORANGE	RED
C	LETTER "C"	LETTER "C"	LETTER "C"	YELLOW	BLUE
N	WHITE	WHITE	GRAY	GRAY	WHITE
G	GREEN	GREEN	GREEN	GREEN	GREEN

NOTE: ALL CABLES ARE BLACK JACKETED CABLES WITH THE ABOVE ID OR COLOR BANDS

HV IDENTIFICATION SHALL BE PER SPECIFICATION SECTION 16115 – 3.1A.4

DISTRIBUTION

VOLTAGE / PHASE	POWER (480V)	LIGHTING (277V)	LIGHTING, RECEPTACLE, SMALL POWER (208/120V)
A	LETTER "A"	BROWN	BLACK
B	LETTER "B"	ORANGE	RED
C	LETTER "C"	YELLOW	BLUE
N	GRAY	GRAY	WHITE
G	GREEN	GREEN	GREEN
NOTE:	ALL CABLES ARE JACKETED CABLES WITH ABOVE ID BANDS	#8 AWG OR LESS SHALL BE THE ABOVE COLOR CABLE JACKET. OTHER CABLES SHALL BE BLACK JACKET WITH ABOVE ID COLOR BANDS	

DISTRIBUTION

POLARITY	DC
+	BLUE JACKETING WITH LETTER "+"
–	BLUE JACKETING WITH LETTER "–"
EARTH	GREEN

CONTROL CABLE

CONTROL	EXTERNAL POWER SOURCE
RED	YELLOW

END OF SECTION

Revision History	
Date	**Rev. No.**
A	0
B	0
C	0
D	0
E	0
F	0
02-19-09	0

EY/ca
C:\d\timsdatasf\BROOKHAVEN_NATIONAL_LABORATORY\SF070003\200-PROJEXEC\280-SPEC\16050a.doc

THIS PAGE INTENTIONALLY LEFT BLANK

SECTION 16100

MOTOR CONTROL

PART 1 GENERAL

1.1 SUMMARY

A. Description Of System
   1. Provide motor control as required, and all material and equipment, including motor control centers, adjustable frequency controllers, motor starters, control devices, safety switches, fuses, as indicated or specified.

1.2 RELATED WORK SPECIFIED UNDER OTHER SECTIONS

1.3 SUBMITTALS

A. Furnish submittals for items that are identified in this SECTION by a different typeface and a bracketed code (e.g., *Item [L]*). Refer to SECTION 01340 for definition of codes for types of submittals and the administrative requirements governing submittal procedure. Additional submittal requirements pertaining to this SECTION are specified herein under this Article.

B. Include complete data on each item. Coordinate the items as they relate to the work prior to submittal.

PART 2 PRODUCTS

2.1 480 VOLT MOTOR CONTROL CENTERS

A. *Motor Control Centers and Components [B,D,P]*: NEMA Standard ICS and requirements herein, and consisting of an incoming line compartment, fusible switch type, combination starters or feeder fusible switches, other equipment as specified, and spaces fully equipped to receive future units, all mounted individually in sectionalized free-standing compartments joined together to give a complete dead front assembly having a NEMA 12, enclosure in Building 600A, NEMA 1 enclosure in Building 600 with wiring for NEMA Class I, Type B terminal arrangement with all equipment and wiring accessible from the front.The MCC shall be pre-configured with a DeviceNet trunkline and DeviceNet to ControlNet bridge.
   1. Rockwell Automation Allen-Bradley Bulletin 2100.

B. The MCC shall meet or exceed the requirements for MCC’s in the following standards:
   1. NEMA ICS 18
   2. UL 845
   3. NEC/NFPA 70
   4. CSA
   5. EN 60439-1
   6. MCC manufacture shall be ISO 9001 certified.

C. Structure: Fabricate from sheet metal and weld and bolt together as necessary to form a rigid self-supporting section approximately 90 inches high by 20 inches wide by 20 inches deep. Bolt the required number of uniform sections together on suitable floor sills and coordinate overall length with the floor space shown.

D. Formed Cover Plates: Equip compartments to contain equipment with hinged doors. Provide hinged doors or bolted removable cover plates on blank compartments and on compartments reserved for future installation of equipment. Provide cover plates at the rear of each section of the bolted removable type. Provide bolted removable covers for openings necessary for the bolting on of future full height vertical sections and for future bus and wiring trough extensions.

E. Wiring Troughs: Provide wiring troughs vertically and horizontally in each section, complete with wiring clamps. Align horizontal troughs in each section with troughs in each adjacent section to form a convenient pullbox throughout the entire length of the control center.

F. Control Units: Provide control units in minimum 12-inch high modules and locate as indicated, using guide supports for positioning plug-in units in place on all applicable sizes. Provide control center assembled and wired, ready to receive line, motor and control circuit connections, and finished in manufacturer's standard synthetic enamel, lacquer, or acrylic finish.

G. Control Center Buses: Design buses for 480 volt, 3 phase, 3 wire, 60 hertz service, as indicated. Provide main horizontal bus rated 800 amperes minimum capacity with 1/4 inch by 2 inch high conductivity copper bar as the minimum allowable size. Provide vertical branch buses of copper bar with a minimum rating of 300 amperes. Ampere ratings are continuous ratings required at a maximum of 50 degC rise above an ambient temperature of 40 degC. Contact surfaces of all bus connections shall be silver or tin plated. Provide mechanical bracing for all bus bars to withstand a phase to phase or phase to ground short circuit current of 42,000 RMS symmetrical amperes. Provide taps from individual units to vertical bus having a capacity equivalent to No. 4 AWG copper as a minimum. Provide a 300 ampere copper minimum ground bus continuous for the entire length of the motor control center.

H. Incoming Line Compartment: Provide adequate space for termination of incoming line conductors and equip main buses with lugs as specified in SECTION 16120, except where a main fusible switch is indicated. Provide main fusible switch as indicated and specified.
   1. Main Fusible Switch: 3 pole, single throw, visible blade, NEMA "HD" heavy duty, quick-make quick-break type rated 600 volts, with continuous current and fuse rating as indicated. Silver or cadmium plate all contact surfaces including fuse clips.
   2. Interlocking: Equip switch with an external operating handle. Interlock the operating handle with the cover door such that the door cannot be opened unless the switch is in the "off" position. Provide means for padlocking the operating handle in the "off" position with three 5/16-inch shackle padlocks such that when the operating handle is padlocked in the "off" position, the cover door cannot be opened and the switch cannot be closed.

I. Single-Speed Nonreversing Starter Units: Combination type consisting of a fusible switch as indicated, a full voltage magnetic starter, thermal overloads, control transformer and control devices as indicated and as specified, all mounted in a unit door frame assembly.
   1. Fusible Switch: 600 volt, 3 pole, single throw, visible blade, NEMA “HD” heavy duty, quick-make quick-break type, horsepower rated, with continuous current and fuse ratings as indicated. Where ratings are not indicated, provide fuse clips to accommodate a dual-element type fuse as hereinafter specified and having a minimum current rating of 150% of the motor full load current, with switch of equivalent rating. Silver or cadmium plate all contact surfaces including fuse clips.
   2. Interlocking: Equip switch with an external operating handle. Interlock the operating handle with the cover door such that the door cannot be opened unless the switch is in the “off” position. Provide means for padlocking the operating handle in the “off” position with three, 5/16-inch shackle padlocks such that when the operating handle is padlocked in the “off” position, the cover door cannot be opened and the switch cannot be closed.
   3. Starter: Size starters in accordance with NEMA Standards for the horsepower of the motors with which they will be used, except do not furnish starters smaller than NEMA Size 1 for motors of 5 horsepower or less. Provide coils for operation on 120 volts unless other requirements are indicated. Equip each starter with a minimum of two normally open and two normally closed spare auxiliary contacts or two spare convertible auxiliary contacts in addition to the normally-open seal-in contact, unless additional requirements are indicated. Provide additional contacts as indicated.
   4. Thermal Overloads: One in each phase wire, external manual reset type. Select overloads after final installed horsepower and nameplate data of motors is determined. Do not use overload heater elements with listed “full load amperes” exceeding 100% of motor full load current adjusted for ambient temperatures. Provide thermal overload heater table inside each door of each motor starter.
   5. Control Transformer: Provide a 480-120 volt control transformer in each individual starter unit, except where a common 120 volt control power source is indicated. Fuse the primary winding as required by the NEC. Fuse and ground the secondary winding as required. Where indicating lights, solenoid valves or other control components are to be energized from the control transformer, increase the capacity of the control transformer proportionately for loading above the minimum requirements of the operating coil. Minimum acceptable size shall be 250 VA.

J. Two-Speed Starter Units: Combination type consisting of a fusible switch as indicated, two full voltage starters for two-speed, two-winding type motors, two sets of thermal overloads, control transformer and control devices as indicated and as specified, with similar features to those specified for single-speed nonreversing starter units. Interlock starters mechanically and electrically to prevent both starters from being closed at the same time

K. Solid State Motor Controllers (SMC/Soft Start): Consisting of a SMC unit in combination with a separate bypass contactor.
   1. The unit shall be provided with a 120V control power transformer with primary and secondary fusing.
   2. The SMC unit shall be provided with a separate bypass contactor for NEMA 12 designs. The bypass contactor shall be energized once the motor is up to full speed. The bypass contactor shall be fully rated for the motor load and be capable of starting the motor if so

wired in the field. The unit shall be provided with a converter module so that the SMC overload can be utilized at all times.

3. Voltage ramp-up time adjustable from 5 to 30 seconds and initial voltage adjustable from 20% to 80% of rated voltage to provide for optimum starting torque.
4. The SMC unit shall be a SMC-Dialog Plus and applications shall include integrated bypass and electronic overload, motor starting capabilities. The integrated bypass automatically closes when the motor reaches full speed.
5. The SMC unit shall be provided with line side protective modules. The modules shall contain capacitors and metal oxide varistors (MOVs) that protect the internal power circuitry from severe electrical transients and/or high electrical noise.
6. Provide a door mounted selector switch for Auto-Manual control. In the auto mode, the start command shall be provided through a remote contact. In the manual mode, the start-stop control shall be provided through the door mounted push buttons. Provide extra contact blocks on the selector switch for monitoring of switch position.
7. Provide door mounted pushbuttons for start-stop and pump stop control. Stop pushbuttons shall always be active.
8. Provide door mounted transformer type pilot lights for indication of On (Red) and Off (Green).

L. Feeder Units: Consisting of a fusible switch as indicated and as specified.

1. Fusible Switches: 600 volt, 3 pole, single throw, visible blade, NEMA “HD” heavy duty, quick-make, quick-break type, horsepower rated, with continuous current and fuse ratings as indicated. Silver or cadmium plate all contact surfaces including fuse clips.
2. Interlocking: Equip switch with an external operating handle. Interlock the operating handle with the cover door such that the door cannot be opened unless the switch is in the “off” position. Provide means for padlocking the operating handle in the “off” position with three 5/16 inch shackle padlocks such that when the operating handle is padlocked in the “off” position, the cover door cannot be opened and the switch cannot be closed.

M. Control Devices: Locate control devices at individual unit compartments except where common control compartments are indicated. Provide a hinged and bolted door over common control compartments.

1. Push Buttons and Selector Switches: Heavy duty, oil-tight type, with contacts rated 10 amperes continuous, 600 volts AC, with legend plate and operation as indicated.
2. Indicating Lights: Heavy duty, oil-tight type with 6 volt lamp, integral 120-6 volt transformer, push-to-test feature, color cap and legend plate as indicated.
3. Control Relays: Heavy duty industrial type with convertible contacts rated 10 amperes continuous, 600 volts AC. Provide coils for operation on 120 volts AC unless other requirements are indicated. Provide number and type of contacts as indicated.
4. Timing Relays in General: Electrically-operated, pneumatically-controlled type, convertible from time-delay after de-energization to time-delay after energization, or vice-versa, in the field, with timing range adjustable from 0.2 seconds to 180 seconds, repeat accuracy of plus or minus 10%, one single pole double throw time contact rated 10 amperes continuous, 600 volts AC, and coil for operation on 120 volts AC unless other requirements are indicated. Provide instantaneous contacts as indicated.
5. Motor-Driven Timing Relays: As indicated.
6. ControlNet Interface
7. Voltage indicating devices

N. Wiring: NEMA Type and Class as specified. Use single conductor stranded copper wire with insulation for 600 volts working and 1500 volts test, rated 90 degC for switchboard wiring. Do not use wire sizes smaller than No. 14 AWG. Terminate all outgoing wiring on molded, barrier type terminal blocks rated 600 volts, with white-face marking strip. Identify all wires by numbers or letters corresponding to elementary diagrams at terminal blocks and devices. Provide lugs for incoming line and outgoing power cable connections as specified in SECTION 16120.

O. Spaces: Where future positions are designated as “space” are indicated on the drawings, equip the MCC with bus and minimum hardware to receive future devices. Furnish a plank removable spacer plate to cover the “space” until future use.

P. Nameplates: Black-white-black laminated plastic with white engraved letters, identifying the circuit and equipment served on each unit door. Provide a similar nameplate, 1 inch by 3 inch size, near the top of the control center identifying the motor control center by numbers and letters as indicated on the drawings.

Q. DeviceNet Communications: The MCC shall have DeviceNet wiring with ControlNet interface configured into its design.
   1. Each motor starter and solid state motor controller/soft start unit in the MCC shall be supplied with a means to communicate via DeviceNet.
   2. The DeviceNet cable shall be in compliance with Article 300.3 (c) (1) of the NEC.
   3. DeviceNet trunk line cable and cable use to connect to a DeviceNet port shall be 600V Class 1.
   4. The MCC manufacture shall provide 24Vdc power supplies as required for the DeviceNet system and DeviceNet requirements.
   5. Motor starter units shall have an electronic overload relay that incorporates the following features:
      a. On-board DeviceNet communications.
      b. LEDs for status indication.
      c. Test/Reset Button.
      d. Adjustable trip of NEMA Class 5 to 30. Unless indicated, the trip class shall be set for NEMA Class 20 operation.
      e. Four inputs and two outputs.
      f. Protective funtions:
         1) Functions shall provide a programmable trip level, warning level, time delay and inhibit window.
         2) Protective functions shall include thermal overload, underload, jam, current imbalance, stall , phase loss, zero sequence ground fault and PTC thermistor input.
      g. Current monitoring functions shall include phase current, average current, full load current, current imbalance percent, percent thermal capacity utilized and ground fault current.
      h. Diagnostic information shall include device status, warning status, time to reset, trip status, time to overload trip and history of last five trips.
   6. DeviceNet communication shall be supplied to allow for communications between soft start starters and the DeviceNet system.

7. The MCC manufacturer shall provide programming and testing.
    a. The manufacturer shall load the DeviceNet MAC ID number (node address) into each unit.
    b. The DeviceNet MAC ID number shall be as indicated or as provided by the contractor.
    c. The DeviceNet network shall be designed and programmed for use at 250kB or 500kB.
    d. The MCC manufacturer shall test the MCC to insure that each unit communicates properly prior to shipment.
    e. Each DeviceNet device shall have a label showing the unit location, node address and baud rate.
    f. The MCC manufacturer shall provide a disk containing applicable Electronic Data Sheet (EDS) files for the DeviceNet devices.
8. The MCC shall have a plug-in metering unit. The power monitor meter shall include min/max logs and trend logs with up to 45,867 data points and shall be capable of performing distortion analysis with THD, Crest Factor (I, V) and Distortion power factor. The power monitor shall be able to display the following:
    a. Line current for all three phases with plus or minus 0.2 percent full-scale accuracy.
    b. Average three phase current with plus or minus 0.2 percent full-scale accuracy.
    c. Line-to-neutral and line-to-line voltage with plus or minus 0.2 percent of full-scale accuracy.
    d. Current and voltage unbalance.
    e. Real, reactive, apparent and true power with plus or minus 0.4 percent full-scale accuracy.
    f. KWh, KVARh and kVAHnet.
    g. True RMS to the 45th harmonic.
    h. Frequency at plus or minus 0.5 percent.
    i. Power factor at plus or minus 0.4 percent.

    The power monitor shall include a DeviceNet communication port as standard and shall have options available for RS-232, RS-485, ControlNet, Remote I/O, EtherNet. The power monitor shall also include two form-C relays.

2.2 ADJUSTABLE FREQUENCY CONTROLLERS

A. *Adjustable Frequency Controllers and Components [B,D,P]*: Each unit shall consist of an adjustable frequency controller, bypass solid state motor controller/soft start (SMC) and fusible switch as indicated, complete with control transformer and control devices as indicated and specified, all mounted in a common free standing enclosure.
    1. Adjustable frequency controller (AFC), variable speed drive shall be a completely solid state, pulse-width-modulated type, variable torque controller, which shall be capable of transforming 480 volt (+10% -5%), three phase, 60 Hertz (+/-2 Hz) input power into variable voltage, adjustable frequency, three phase output power of suitable capacity and waveform to control the speed and the torque of NEMA Standard Design B, squirrel-cage induction motors throughout a stepless speed range of 10 to 110 percent of rated synchronous RPM on a continuous basis with variable torque loads.
    2. Unit shall be provided with a door-mounted command/control center, microprocessor based, with digital display. Center shall incorporate all operating controls; programmable

parameter controls; and frequency, voltage, current, speed, fault indications, and programmable settings display. Program and factory presets shall be held in a non-volatile memory.

3. All devices and features required for compliance with ANSI/IEEE Standard 519 shall be provided. The controller shall also be equipped with a filter circuit to reduce the harmonics of the waveform applied to the motors to five percent or less of the fundamental RMS value under all conditions to minimize motor heating and to protect the controller from AC line disturbances. Equip controller with a reactor to prevent nuisance opening of line protective devices due to capacitor charging currents.
4. Enclosure shall be gasketed NEMA 1, arranged to be mounted as an individual unit.
5. Provide drive input contactor.
6. Provide manual bypass factory installed. Bypass starter shall be a solid state motor controller/soft start SMC-Dialog Plus unit. SMC-Dialog plus shall include integrated bypass and electronic overload and motor starting capabilities.
7. Both the AFC and SMC-Dialog Plus bypass starter shall be configured with ControlNet for interfacing into the ControlNet system (two ControlNet nodes).

B. AFC shall include the following design features:
1. Electronic current limit circuitry, adjustable to 110 percent of motor full-load current, to safely limit the current under any fault condition of inverter or motor and to provide soft-start acceleration and running without exceeding 150% of motor rated current. The current limit shall be of the type for variable torque load, which acts to reduce output voltage and frequency without directly causing a protective fuse to blow.
2. Controller shall be designed to accept a 4-20 mA analog speed signal from a ground-isolated process controller in the automatic mode or from programmed speed control input parameter in the manual mode. Provide programmable automatic-manual mode selection. The selected signal shall control the motor speed between the preadjusted minimum and maximum speed settings. Maximum speed shall be field adjustable to 100% of rated speed.
3. AFC shall be equipped with a door-mounted Bypass-Off-Automatic selector switch. By this bypass switch, the controller shall have a stand-alone-operation to facilitate for startup, adjustment or trouble-shooting, while the motor is on the bypass operation. Provide a normally closed dry contact from the bypass starter into the controller; (“Auto” control circuit) to confirm the bypass operation.
4. Fusible Switch: 600 volt, 3 pole, single throw, visible blade, NEMA “HD” heavy duty, quick-make, quick-break type, horsepower rated, with continuous current and fuse ratings as indicated. Where ratings are not indicated, provide fuse clips to accommodate a UL Class RK5 dual-element type fuse as specified and having a minimum current rating of 150% of the motor full load current, with switch of equivalent rating. Silver or cadmium plate all contact surfaces including fuse clips.
5. Interlocking: Equip switch with an external operating handle. Interlock the operating handle with the enclosure door such that the door cannot be opened unless the switch or breaker is in the “off” position. Provide means for padlocking the operating handle in the “off” position with three, 5/16-inch shackle padlocks such that when the operating handle is padlocked in the “off” position, the enclosure door cannot be opened and the switch cannot be closed.
6. Starter: Size starters in accordance with NEMA Standards for the horsepower of the motors with which they will be used, except do not furnish starters smaller than NEMA

Size 1. Provide coils for operation on 120 volts unless other requirements are indicated. Equip each starter with a minimum of two normally open and two normally closed spare auxiliary contacts or two spare convertible auxiliary contacts in addition to the normally-open seal-in contact, unless additional requirements are indicated. Provide additional contacts as indicated.

7. Thermal Overloads: One in each phase, externally manual reset type with normally open alarm contact. Select overloads after final installed horsepower of motors is determined. Do not use ratings exceeding 100% of motor full load current adjusted for ambient temperatures.
8. Control Transformer: Provide a 480-120 volt control transformer in each individual starter unit. Fuse the primary winding as required by the NEC. Fuse and ground the secondary winding as required. Where indicating lights, solenoid valves or other control components are to be energized from the control transformer, increase the capacity of the control transformer proportionately for loading above the minimum requirements of the operating coil.

C. Provisions for Metering, Control, Diagnosis Devices and Interlocking:
1. Motor Speed Indication shall be a selectable display on an integral liquid crystal display (LCD) or equivalent device.
2. Automatic Reset and Restart, immediately after the power outage.
3. Fault/Problem Diagnostics Display “LCD” Readout; to indicate running fault conditions of
   a. Over/Under Voltage trip
   b. Overcurrent trip
   c. Overtemperature trip
   d. Low Speed
   e. DC bus charged
4. Controller shall accept input from dry contacts from external fault circuit or alarm equipment to shut down the input power automatically and safely.
5. Provide programmed safety interlocking on normal and bypass mode operations to inhibit unauthorized startup if accidental shutdown has occurred, and equip with a “DISABLED” indication.
6. Control Net Interface
7. Remote Voltage Indication

D. Provision for Programmable Adjustments:
1. The output voltage to frequency ratio shall be adjusted to save the maximum amount of energy by optimizing volt/Hertz ratio to match the actual load requirements.
2. Provide adjustable maximum and minimum frequency (speed) limits.
3. Provide 3 adjustable band width (0.2 - 10 Hz band width) frequency avoidance bands for skipping over mechanical resonance frequency regions.
4. Acceleration/Deceleration, internally adjusted within 2 to 20 seconds range, with the torque limit overriding the acceleration protection as well as the regeneration protection during deceleration.
5. Output V/Hz ramp shall be automatically controlled to provide a voltage boost to increase the output torque limit to match the load torque which may override the speed command and decrease the frequency while maintaining the correct V/Hz ratio whenever the load level surpasses the drive design level.

E. Include the following features of self-protection and reliable operation:
   1. Current Limit; to limit output current to 110% for continuous operation and 150% for one minute operation of the inverter rating. The current limit shall be designed to function automatically to prevent overcurrent trip due to momentary overload condition, allowing the drive to continue operation.
   2. Instantaneous Overcurrent Trip; to safely limit the output current in under 50 microseconds due to short circuit or severe overload condition.
   3. Undervoltage Trip; to protect the drive due to non-momentary power or phase loss. The undervoltage trip will activate automatically when the line voltage drops 15% below the rated input voltage. Provide adjustable line dip ride-through (0-500 msec).
   4. Overvoltage Trip; to protect the drive due to voltage levels in excess of its rating. The overvoltage trip will activate automatically when the inverter bus in the controller exceeds 650 VDC.
   5. Overtemperature Trip; to protect the drive from elevated temperatures in excess of its rating. Provide an indicating light which begins to flash within 10 degC of the trip point, this light to alert the operator of the increasing temperature condition. When the overtemperature trip point is reached, this light shall be continuously illuminated until the cause is removed or repaired.
   6. Automatic Reset/Restart: The drive shall be equipped such that a trip condition resulting from overcurrent, undervoltage, overvoltage or overtemperature shall be automatically reset and the drive shall automatically restart upon removal or correction of the causative condition. The number of reset/restart attempts for overcurrent, undervoltage, overvoltage and overtemperature shall be limited to five. If in five attempts of reset/restart it is not successful, the drive shall shut down safely requiring a manual restart. If within five attempts a successful reset/restart occurs, the automatic reset/restart circuit shall reset the attempts counted to zero after approximately 10 minutes of continuous operation.
   7. LCD display messages, shall be provided for indication of fault conditions as described above in paragraphs C.3.a. through C.3.e. Provide an SPDT contact for remote indication of these conditions. Additionally, provide indication to show power “ON”, “RUNNING” and the drive “DISABLED”.

F. Manufacturers:

2.3 THREE PHASE MAGNETIC MOTOR STARTERS FULL VOLTAGE COMBINATION TYPE

A. *Single-Speed Nonreversing Starters [U]*: Per NEMA Standard ICS and consisting of a fused disconnect switch, a full voltage magnetic starter, thermal overloads, control transformer and control devices as indicated and as specified, all mounted and wired in a NEMA 12 enclosure and a NEMA 3R in outdoor areas unless otherwise indicated.
   1. Fused Disconnect Switch: 600 volt, 3 pole, single throw, visible blade, NEMA “HD” heavy duty, quick-make, quick-break type, horsepower rated, with continuous current and fuse ratings as indicated. Where ratings are not indicated, provide fuse clips to accommodate a dual element type fuse as specified and having a minimum current rating of 150% of the motor full load current, with switch of equivalent rating. Silver or cadmium plate all contact surfaces including fuse clips.
   2. Interlocking: Equip switch with an external operating handle. Interlock the operating handle such that the door cannot be opened unless the switch is in the “off” position. Provide means for padlocking the operating handle in the “off” position with three,

5/16-inch shackle padlocks such that when the operating handle is padlocked in the “off” position, the cover door cannot be opened and the switch cannot be closed.

3. Starter: Size starters per NEMA Standards for the horsepower of the motors with which they will be used, except do not furnish starters smaller than NEMA Size 1 for motors of 5 horsepower or less. Provide coils for operation on 120 volts AC unless other requirements are indicated. Equip each starter with a minimum of two normally open and two normally closed spare auxiliary contacts or two spare convertible auxiliary contacts in addition to the normally-open seal-in contact, unless additional requirements are indicated. Provide additional contacts as indicated.
4. Thermal Overload: One in each phase wire, external manual reset type. Select overloads after final installed horsepower of motor is determined. Do not use ratings exceeding 100% of motor full load current adjusted for ambient temperatures.
5. Control Transformer: Provide a 480-120 volt control transformer in the starter enclosure. Fuse the primary winding as required by the NEC. Fuse and ground the secondary winding as required. Where indicating lights, solenoid valves or other control components are to be energized from the control transformer, increase the capacity of the control transformer proportionately for loading above the minimum requirements of the operating coil.
6. Control Devices: Provide control devices as specified, in starter enclosures when required by elementary diagrams.

B. *Reversing Starters [U]*: Per NEMA Standard ICS and consisting of a fused disconnect switch, two full voltage magnetic starters, thermal overloads, control transformer and control devices as indicated and as specified, with similar features to those specified for single-speed nonreversing starters. Interlock starters mechanically and electrically to prevent both starters from being closed at the same time.

C. *Two-Speed Starters [U]*: Per NEMA Standard ICS and consisting of a fused disconnect switch, two full voltage starters for two-speed two-winding type motors, two sets of thermal overloads, control transformer and control devices as indicated and as specified, with similar features to those specified for single-speed nonreversing starters. Interlock starters mechanically and electrically to prevent both starters from being closed at the same time.

D. Manufacturers:
1. Allen-Bradley.
2. Eaton Corp., Cutler-Hammer/Westinghouse.
3. General Electric.
4. Siemens-Allis.
5. Square D.
6.

2.4 SINGLE PHASE MANUAL MOTOR STARTERS FRACTIONAL HORSEPOWER TYPE

A. *Single-Speed Starters for 115 Volt Motors [U]*: Per NEMA Standard ICS and consisting of a toggle-operated, single pole, quick-make, quick-break type starter, one thermal overload element, and pilot lights in cover as indicated all mounted in a NEMA 1 surface mounting enclosure, or with a stainless steel plate for flush mounting in an outlet box, as indicated. Provide means for padlocking the toggle operator in the “off” position.

B. Manufacturers:
   1. Allen-Bradley Bulletin 600.
   2. General Electric CR101.
   3. Square D Class 2510.
   4. Eaton/Cutler Hammer Type MS.

2.5 SAFETY SWITCHES

A. *Safety Switches [U]*: General Description. Fusible or nonfusible as indicated, quick-make, quick-break, NEMA "HD" heavy duty visible blade type, horsepower rated, in NEMA 12 enclosures in general in buildings 600 & 600A and NEMA 1 enclosures in building 600 Electrical Mezzanine unless otherwise noted. Furnish 3 pole, single throw switches unless otherwise indicated, with voltage and current ratings as indicated. Short circuit rating with fuses shall not be less than 200,000 A.I.C. Silver or cadmium plate all contact surfaces including fuse clips.

B. Interlocking: Equip switches with an external operating handle and interlock the operating handle with the cover door such that the cover door cannot be opened unless the switch is in the "off" position. Provide means for padlocking the operating handle in the "off" position such that when the operating handle is padlocked in the "off" position, the cover door cannot be opened and the switch cannot be closed. Equip switches with auxiliary contacts when such are indicated.

C. Fuse Clips: Standard rejection type for dual element cartridge type fuses as specified unless otherwise required.

D. Manufacturers:
   1. General Electric Type TH.
   2. Square "D" Heavy Duty.
   3. Westinghouse H-600.

2.6 FUSES

A. *Fuses [U]*; in General. Up to and including 600 Amps, provide one-time high interrupting capacity, UL Class RK5 dual element type or UL Class RK1 current-limiting fuses. Class H fuses are not acceptable. For fuse sizes over 600 Amps, provide UL Class L, current limiting time delay type.

B. *Class RK5 Fuses [U]*:
   1. Bussmann "Fusetron".
   2. Gould-Shawmut "Trionic".
   3. Reliance Fuse "ESCR" or "ECNR".
   4. Littelfuse "FL SLO-BLO".

C. *Class RK1 Fuses [U]*:
   1. Bussmann "Low-Peak".
   2. Gould-Shawmut "Amp-Trap".
   3. Reliance Fuse "LESRK" or "LENRK".

4. Littelfuse “LL Series”.

D. *Class L Fuses [U]*:
1. Bussmann “KRP-C”.
2. Gould-Shawmut “A4BY”.
3. Reliance Fuse “LCL”.
4. Littelfuse “KLPC”.

PART 3 EXECUTION

3.1 INSTALLATION

A. Motors: Refer to SECTION 16025 for furnishing and mounting responsibility for all electric motors. Motors 1/2 horsepower and larger are 460 volts, 3 phase, 60 hertz, and motors less than 1/2 horsepower are 115 volts, single phase, 60 hertz, unless other requirements are indicated. In all cases where the capacity or rating of equipment being furnished under this SECTION is based on the rating of equipment being furnished under other SECTIONS, confirm such ratings before purchasing the equipment.

B. Control Equipment: Install equipment at locations indicated. Install motor starters, safety switches and control devices at uniform heights in general throughout the building with operating means at convenient heights above the floor and as indicated. Do not locate the operating means for individually mounted equipment at a height greater than 66 inches above the floor unless prior approval is obtained from the ARCHITECT-ENGINEER.

C. Fuses: Install fuses, of required ampere rating, in all fusible equipment installed under 16000 Series SECTIONS. Verify all fuse ratings based on actual motor horsepower provided and manufacturer’s requirements for equipment protection.

3.2 ADJUSTABLE FREQUENCY CONTROLLER TESTING AND PERFORMANCE REQUIREMENTS

A. Every AFC shall be functionally tested and factory adjusted; but it may be necessary to readjust the controller to meet a specific requirement of the speed range (maximum/minimum limits) as well as to obtain a sufficient torque for a soft starting and smooth running of the motor under various actual load conditions.

B. Run the unit up to full speed and measure voltage and current; then calculate the efficiency which shall be in excess of 95% at full load and the power factor in excess of 0.85. All readings must fall within the predetermined design values to assure compliance with the SPECIFICATIONS.

C. Standard: Adjustable frequency drive system installations shall comply with the recommendations and requirements of ANSI/IEEE Standard 519.

D. Upon final installation of the entire system and equipment, provide factory personnel for two full 8-hour training sessions on site to fully acquaint the plant personnel (drive operators) with the equipment and its operation.

E. Provide two sets of standard drawings, three sets of instruction manual and a certified test record for each particular controller. In addition, provide one complete spare parts kit for each size of drive. The kit shall include a control board, thyristor block, diode set, fuses, and all other field-replaceable elements as necessary.

END OF SECTION

Revision History	
Date	**Rev. No.**
A	0
B	0
D	0
E	0
F	0
02-19-09	0

EY/ca
C:\d\timsdatasf\BROOKHAVEN_NATIONAL_LABORATORY\SF070003\200-PROJEXEC\280-SPEC\16100.doc

THIS PAGE INTENTIONALLY LEFT BLANK

SECTION 16112

BUSWAYS

PART 1 GENERAL

1.1 SUMMARY

A. Description of Systems
   1. Provide busway systems as indicated or specified.

B. Products Furnished But Not Installed Under This Section
   1. Furnish four hook sticks of suitable length for operation of plug-in units from the floor.

1.2 SUBMITTALS

A. Furnish submittals for items that are identified in this SECTION by a different typeface and a bracketed code (e.g., *Item [L]*). Refer to SECTION 01340 for definition of codes for types of submittals and the administrative requirements governing submittal procedure. Additional submittal requirements pertaining to this SECTION are specified herein under this Article.

B. Include complete data on each item. Coordinate the items as they relate to the work, prior to submittal.

1.3 EXTRA STOCK

A. Furnish number of spare plug-in fused switch and circuit breaker units as specified and indicated for the OWNER'S future use.

PART 2 PRODUCTS

2.1 MATERIALS

A. Plug-In Busway
   1. *Plug-In Busways and Components [U]:* Totally enclosed, nonventilated, low impedance type per NEMA Standard BU-1 and ANSI/UL 857, consisting of standardized assemblies of insulated bus bars in a rigid formed sheet metal enclosure and components. Furnish straight sections, cable tap boxes, end closures, support brackets and plug-in circuit breaker or fused switch units as indicated. Furnish 3 phase, 3 wire,as indicated, with voltage rating as indicated, complete with integral ground bus.
      a. General Electric
      b. Siemens Energy & Automation, Inc. - ITE
      c. Square D
      d. Eaton/Cutler-Hammer
   2. Continuous Current Rating. As indicated; rating indicated is the minimum required when busway is installed in the flatwise, edgewise, or vertical position relative to the floor.

Provide ground bus of capacity equal to one-half of a phase bus. Plug-in bus duct shall be designed so that, at its continuous rating, no part shall exceed a 55 degC temperature rise above a 40 degC ambient temperature.

3. Minimum Short Circuit Rating. As indicated; 65,000, RMS symmetrical amperes at 480 volts.
4. Conductors. High conductivity copper bar (with maximum current density of 1000 amperes per square inch) tin or silver plated at all joints, connections and plug-in openings. Fully insulate conductors, except for stab points, with a PVC, reinforced fiber glass or mylar material having a temperature rating of not less than 105 degC.
5. Plug-in Openings. Provide at two foot intervals on each side of straight duct; stagger openings on opposite sides of duct so all openings, 10 in a ten foot length, are usable at the same time.
6. *Plug-in Units - General [U]:* Fabricated assemblies of equipment enclosed in metal housings with hinged cover door for access to equipment, adequate conduit knockouts, necessary clamps for attachment of the housing to the bus duct enclosure, and with high contact pressure silver or tin plated stabs to engage phase and ground bus bar. Equip units with ground bus stabs as required.
7. Plug-in Fusible Switch Units. Equipped with fusible disconnect switch having an external operating handle arranged for both manual and hook-stick operation and interlocked with the cover door such that the door cannot be opened unless the switch is open. Operating mechanism must clearly indicate the “on” and “off” position of the switch and have provision for locking the switch in the “on” or “off” position with three 5/16 inch shackle padlocks. Provide 3 pole, visible blade, quick-make, quick-break switch rated 600 volts, with horsepower rating in sizes up to 200 amperes, and of current rating indicated. Provide UL Class R type fuse clips for size fuse as indicated on the DRAWINGS.
8. Expansion joints. Provide at each building expansion joint with additional expansion joints for each 200 foot of straight runs or more frequently if recommended by the busway manufacturer. Expansion joint shall provide for a minimum of plus or minus 2 inches movement.

B. Feeder Busway
1. *Feeder busways and Components [U]:* For service entrance and distribution shall include busway sections, hangers and fittings in accordance with NEMA Publication No. BU-1 and ANSI/UL 857 “Busways”.
   a. Cutler Hammer Product, Eaton Corp.
   b. General Electric
   c. Siemens Energy & Automation, Inc. - ITE
   d. Square “D”
2. Busway sections and fittings. Include straight sections, elbows, adapters and end flanges consisting of prefabricated bus-bars in a protective enclosure.
3. Busway. Totally enclosed, non-ventilated, low impedance type for 480 volts, 3 phase, 3 wire, 60 Hertz operation, with ground bus. Busway shall be rated in amperes as indicated for service entrance and for distribution. The specified ampere rating shall be considered to be the minimum current carrying capacity of the busway when installed in the edgewise position in which the bus bars are vertical with respect to the floor. The maximum allowable temperature rise, including joints, shall not exceed 55 degC, rise above a 40 degC, ambient.

4. Bus. Consist of standardized assemblies of formed metal sheets to form a rigid enclosure of the insulators and the bus bars.
5. Busway conductor. Fabricated from 98% conductivity pure copper. Bus bar conductors shall be fully insulated. The temperature rating of bus bar insulating material shall carry a minimum rating of 105 degC. Minimum thickness shall be 20 mils with PVC, reinforced fiberglass or mylar as acceptable materials. Insulating material shall not support combustion or absorb moisture. All current carrying joint connections shall be tin or silver plated.
6. Hangers. Provide as indicated with a minimum of two per ten foot section.
7. Minimum short circuit rating. As indicated; 75,000 RMS amperes symmetrical at 480 volts for distribution.
8. Ground bus capacity equal to ½ the capacity of the phase bus.

PART 3 EXECUTION

3.1 INSTALLATION

A. Install horizontal runs of plug-in busway and feeder busway level and parallel to walls and ceilings at the location and elevation indicated. Install all vertical offsets plumb. Mount plug-in busway edgewise with all plug-in openings available for use.

B. Provide busway supports, hangers, and accessories as required for the complete installation. Rigidly suspend run of busway and support from building structure at intervals of 8 feet as a maximum. Sway brace busway systems at intervals of 20 feet as a maximum. Where rods are used as supports, use rods of 1/2 inch diameter as a minimum. Provide special supports as required.

C. Protect busway, expansion fittings and accessories shall not be installed before the building roof is weather tight, also it shall be protected from the weather before and after installation.

D. Provide identification labels and high voltage warning labels on busways at intervals not exceeding 64 feet as indicated on SECTION 16050 - Appendix “A”.

E. Provide identification labels on all busway plug-in units and cable tap box connections as indicated in SECTION 16050 - Appendix “A”.

F. Location of busway shall be coordinated with other utilities and building structures to provide clearance in front of bus plugs and accessibility to bus plugs from the floor and as required by NEC.

G. Maximum busway deflection shall not exceed 1/240 of span after bus plugs have been installed.

H. Busway shall be installed with phase orientation G, A, B, C top to bottom, left to right, front to back. Provide busway phase transposition section as required for proper orientation entering unit substation secondary breaker sections. Phase transposition of busway will not be permitted within the unit substation.

END OF SECTION

Revision History	
Date	**Rev. No.**
A	0
B	0
D	0
E	0
F	0
02-19-09	0

EY/ca
C:\d\timsdatasf\BROOKHAVEN_NATIONAL_LABORATORY\SF070003\200-PROJEXEC\280-SPEC\16112.doc

SECTION 16115

MEDIUM VOLTAGE CABLE

PART 1 GENERAL

1.1 SUMMARY

A. Description Of Systems
1. Provide medium voltage wire and cable systems as required, and all materials and equipment, including wire and cable, connectors and lugs, splicing and terminating kits and identification, as indicated or specified.

1.2 QUALITY ASSURANCE

A. Source Quality Control
1. Furnish wire and cable on which standard factory tests established by ASTM, ANSI, ICEA and NEMA have been performed.

1.3 SUBMITTALS

A. Furnish submittals for items that are identified in this SECTION by a different typeface and a bracketed code (e.g., *Item [L]*). Refer to SECTION 01340 for definition of codes for types of submittals and the administrative requirements governing submittal procedure. Additional submittal requirements pertaining to this SECTION are specified herein under this Article.

B. Submit product data for each type and size of wire and cable. Identify material, construction data, insulation thickness, jacket thickness, suitability for application intended, factory impulse test value and manufacturer's recommendations for items specified.

C. Submit cable identification system for approval.

D. Submit test data for wire and cable as specified under the paragraph "SOURCE QUALITY CONTROL". Do not install wire and cable for which test data has been requested until test data is approved.

1.4 PRODUCT DELIVERY, STORAGE AND HANDLING

A. Wire And Cable Delivery
1. Deliver all wire and cable to the site on reels, plainly marked with complete identification, including wire or cable size, number of conductors, type of wire or cable, length, weight, thickness and character of insulation and the name of the manufacturer.

B. Pulling Eyes
1. Order all cables in lengths required by the installation. Mount on separate reels with factory-installed pulling eyes on each required length. Attach pulling eyes directly to conductors. Factory-seal cable ends to prevent the entrance of moisture.

PART 2 PRODUCTS

2.1 MATERIALS

A. Wire And Cable
   1. General Requirements. Furnish wire and cable meeting the standard specifications established for such material and construction by ASTM, ANSI, ICEA AND NEMA, where applicable. Furnish stranded conductors of copper or aluminum as specified and conductor size as indicated.
   2. Acceptable manufacturers:
      a. The Okonite Co. “Okoguard-Okoseal” Type MV-105.
      b. Approved Equal
   3. *Cable [U]*; Reduced conductor size cable for Power Distribution at 13,800 Volts for wet or dry locations in Conduit and Underground Ducts. Single conductor or three conductor triplex assembly, consisting of compact stranded annealed copper individual conductors covered with an extruded thermoset semiconducting stress control layer, insulated with a heat, moisture, corona, electrochemical treeing, and ozone-resistant ethylene propylene rubber compound rated 105 degC (MV-105) with a 133% insulation level, 140°C emergency rating, 15,000 volts ungrounded, having a 5 mil with 25% normal overlap copper shield over the insulation and a PVC or chorinated polythylene jacket over the shielding. Provide continuous phase identification of individual conductors in triplex assembly.
   4. Cable [U]; reduced conductor size cable for Power Distribution at 4,160 Volts for wet or dry locations in conduit and underground ducts. Single conductor or three conductor triplex assembly, consisting of compact stranded annealed copper individual conductors covered with an extruded thermoset semiconducting stress control layer, insulated with a heat, moisture, corona electrochemical treeing, and ozone-resistant ethylene propylene rubber compound rated 105 deg C (MV-105), 133% insulation level, 140°C emergency rating, 5000 volts ungrounded, having a 5 mil with 12.5% nominal overlap copper shield over the insulation and a PVC or chlorinated polyethylene jacket over the copper shielding tape. Provide continuous phase identification of individual conductors in triplex assembly.

B. Connectors For Splicing Copper Conductors
   1. Connectors for Straight Splicing Conductors: Solderless compression 2-way type.
      a. FCI/Burndy Type YS-L
      b. Ilsco CT Series
      c. Panduit
      d. Thomas & Betts 54500 Series
   2. Connectors for 3-Way Splicing Conductors: Solderless compression type.
      a. FCI/Burndy YST
      b. Ilsco
      c. Panduit
      d. Thomas & Betts 54700 Series

C. Lugs For Terminating Copper Conductors
   1. Lugs; for Terminating Conductors Larger than No. 4/0 AWG. UL listed AL/CU compression type, two hole.
      a. FCI/Burndy YA-A
      b. Ilsco 2ACL Series
      c. Thomas & Betts 60200

D. Cable Splice And Termination Kits
   1. *Kits for Field Splicing and Terminating Cable [U]:* Of an appropriate design for the particular cables with which they will be used, and of a type recommended by the cable manufacturer. Include all material necessary for completion of the splice or termination in an individually packaged kit, with complete instructions for each step of the splicing or terminating procedure.
      a. PLM Products Div. of Adalet
      b. 3-M Co.
      c. TYCO Electronics/Raychem ““HVTZ” Systems

E. Miscellaneous
   1. Arc-Proofing Tape:
      a. 3M Co. “Scotch 77”
      b. T & B Corp. “Flame Safe Fire-Retardant Wrap”
      c. Plymouth/Bishop Insulating Products “53 Plyarc”
   2. Banding Tape:
      a. 3M Co. “Scotch 27”
      b. Plymouth/Bishop Insulating Products “77 Plyglas”
   3. Wire Labels; See specification SECTION 16050 - Appendix “A”.
   4. Lubricating Compound:
      a. American Polywater Corp.
      b. Ideal 77 Yellow or Wire Lube
   5. *Preformed Stress Relief Terminators [D,P]*:
      a. Joslyn
      b. 3M Co. “5600” or “5900” Series Termination Kits
      c. TYCO Electronics/Raychem Corp. “HV” Series
   6. *Fasteners for cables in tray [U]*:
      a. 3M 06220 Series.
      b. Panduit Pan – PAN-TY Series
      c. Thomas & Betts TY-RAP.

PART 3 EXECUTION

3.1 INSTALLATION

A. General
   1. Install wiring in raceway and cable support systems, as indicated and as specified except where exposed wiring is indicated or specified. Install wiring only in completed raceway and cable support systems and when systems are protected from the weather. Install conductors continuous, without splices, between equipments, where possible.

2. Continuously lubricate all non-armored cables of the larger sizes at the pull-in point of conduit systems with a lubricating compound compatible with conductor insulation or jacket.
3. Install conductors in such a manner that the bending radius of any wire or cable is not less than the minimum recommended by ICEA or the manufacturer. In pulling cables, do not exceed the manufacturer's recommended values for maximum pulling tension. When cables are pulled by means of a powered winch, be particularly careful not to exceed cable tension limits; the ARCHITECT-ENGINEER may require the use of a dynamometer on all remaining pulls if in his opinion the tension limits are being exceeded.
4. Connect all wiring to equipment such that phasing is A-B-C left to right, top to bottom and front to back, where possible, and permanently identify phasing on the structure or housing adjacent to the bus. Phase identification A-B-C is equivalent to transformer phase identification X1-X2-X3 and H1-H2-H3. Identify individual conductors as to phase connection A, B, C, by means of wire labels, at each splice and termination.

B. In Underground Duct Systems
1. Brush and swab the duct line before pulling cables. Use flexible cable feeders of an appropriate size to lead the cable from the reel into the duct mouth. In manholes and handholes, install cables on cable rack insulators. In passing cables through manholes and handholes, take care to avoid crossovers so that each cable is accessible when placed on racks; and where feasible, install each cable in the duct in the same relative position throughout the underground system, unless otherwise required or indicated. Install cable so that spare ducts are accessible for use in the future.
2. Fireproof each cable at exposed locations in manholes and handholes as follows:
   a. Install not less than 4 layers of arc-proofing tape, two layers half-lapped, in one direction. Terminate fireproofing approximately 1/2 inch from the duct face to permit inspection of the cable at the duct entrance and to prevent the fireproofing from interfering with the expansion and contraction of the cable.
   b. In applying tape, snug the tape by twisting the tape with the hand. Where steep inclines are caused by changes in cable diameters, such as at splices, apply tape in a stairstep manner by increasing the lapping of the tape as required to maintain a minimum thickness of 4 layers. Increase lapping around cable bends to avoid decreasing the thickness below minimum on the outside of the cable bend.
   c. Band the arc-proofing tape with 1/2 inch wide pressure-sensitive fiber glass cloth banding tape, at intervals not exceeding 12 inches on centers. Construct bands of not less than six turns of banding tape so applied that not more than three turns are in contact with the elastomer backing of the arc-proofing tape.

C. Splices And Terminations
1. Splice and terminate conductors with connectors and lugs as specified for the specific size and type of conductor. Terminate shielded cables with stress cones. Continue shields through splices and ground shields at splices and at terminations. Do not splice cables except where cable lengths are limited by maximum reel capacity or anticipated pulling tension. Do not splice direct burial cable underground. Indent all compression type connectors and lugs with tools as recommended by the connector or lug manufacturer.
2. Do not open cable prior to splicing or terminating unless unavoidable, and do not make splices or terminations if exposed to damp or inclement weather, except when prior

approval has been obtained from the ARCHITECT-ENGINEER and a cable splicer's tent or similar means of protection is employed. Train or rack cables into their final positions before cutting any cable. Cut cables to be spliced so that they butt squarely at the centerline of the splice. Once a cable is opened, proceed with the work immediately and continue uninterrupted until the splice or termination is completed, including any sealing or resealing required.

3. Thoroughly clean wire ends before connectors or lugs are applied. Before installing a compression connector or lug on an aluminum conductor, apply an aluminum joint compound, to the exposed conductor and wire brush through the compound to remove the aluminum oxide film. Install the connector immediately after wire brushing the conductor.
4. Whenever aluminum or copper lugs are terminated on aluminum bus, use a Belleville washer and two tin or cadmium plated washers, one on each side, in combination with aluminum joint compound on all contacting surfaces. Tighten and/or torque bolts until Belleville washer is flat. Provide new Belleville washer after original use.
5. Insulate splices and terminations with materials in packaged kits as specified. Follow instructions of the cable manufacturer for the work. Install rainshields for outdoor taped terminations. Install potheads, preformed stress relief terminators for outdoor terminations on poles or structures. Install armor terminators for armored cable terminations at equipment. Where splices are required in armored cables, use approved splicing sleeves and locate sleeves outside of and adjacent to the tray, not in the tray. Provide separate supports for same. Support all splices in non-armored cables in manholes and handholes adjacent to the splice, not on the splice. Terminate cable ground conductors on equipment ground bus.

D. Cable Identification
   1. Identify cables as per SECTION 16050 - Appendix "A".

END OF SECTION

Revision History	
Date	**Rev. No.**
A	0
B	0
D	0
E	0
F	0
02-19-09	0

EY/ca
C:\d\timsdatasf\BROOKHAVEN_NATIONAL_LABORATORY\SF070003\200-PROJEXEC\280-SPEC\16115.doc

THIS PAGE INTENTIONALLY LEFT BLANK

SECTION 16120

WIRE AND CABLE (600 VOLTS AND LESS)

PART 1 GENERAL

1.1 SUMMARY

A. Description Of Systems
   1. Provide wire and cable systems as required, and all material and equipment, including wire cable, connectors and lugs, fittings, and wire and cable identification, as indicated or specified.

1.2 QUALITY ASSURANCE

A. Requirements Of Regulatory Agencies
   1. Wire and Cable. Listed by Underwriters' Laboratories as meeting National Electrical Code requirements and be so labeled.

B. Source Quality Control
   1. Furnish wire and cable on which standard factory tests established by ASTM, ANSI, ICEA and NEMA have been performed.

1.3 SUBMITTALS

A. Furnish submittals for items that are identified in this SECTION by a different typeface and a bracketed code (e.g., *Item [L]*). Refer to SECTION 01340 for definition of codes for types of submittals and the administrative requirements governing submittal procedure. Additional submittal requirements pertaining to this SECTION are specified herein under this Article.

B. Submit product data for each type and size of wire and cable. Identify material, construction data, insulation thickness, and jacket thickness. Submit color coding schemes for branch circuit wiring. Submit cable identifications.

C. Submit test data for wire and cable as specified under the paragraph "SOURCE QUALITY CONTROL". Do not install wire and cable for which test data has been requested until test data is approved.

1.4 PRODUCT DELIVERY, STORAGE AND HANDLING

A. Wire And Cable Delivery
   1. Deliver all wire and cable to the site on reels or in coils, plainly marked for complete identification, including the wire or cable size, the number of conductors, type of wire or cable, length, weight, thickness and character of the insulation and the name of the manufacturer. Furnish 600 volt wires and cables on coils and reels carrying original date perforated inspection labels of the Underwriters' Laboratories showing the number of feet and type of wire contained.

PART 2 PRODUCTS

2.1 MATERIALS

A. Wire And Cable
   1. General Requirements. Furnish wire and cable per standard specifications established for such material and construction by ASTM, ANSI, ICEA and NEMA, where applicable. Furnish copper conductors unless otherwise specified, not less than No. 12 AWG, except control conductors which may be No. 14 AWG. Furnish conductor sizes as indicated. Furnish solid or stranded conductors for sizes No. 10 AWG and smaller, and stranded conductors for sizes No. 8 AWG and larger.
      a. American Insulated Wire Corp.
      b. General Cable Corp.
      c. The Okonite Co.
      d. Pirelli Cable Corp.
      e. Service Wire Company
      f. Southwire
      g. Aetna Insulated Wire Corp.
   2. *Wire for Final Connection in Conduit [U]*; to Incandescent Fixtures, Remote Ballasts. No. 14 AWG Stranded copper, NEC Type SF-2 rated 200 degC, 600 volts.
   3. *Wire for Use in Fluorescent Fixture Wiring Channels [U]:* Stranded copper, NEC Type RHH, THHN, or XHHW-2, rated 90 degC, 600 volts.
   4. *Wire for Exposed Cord Connection to Fluorescent Fixtures [U]:* Three conductor stranded copper, NEC Type SO rated 60 degC, 600 volts.
   5. *Wire for General Interior and Exterior Use [U]:* Single conductor, annealed copper, NEC Type XHHW-2 or RHW-2 rated 90 degC in dry locations and 75 degC in wet locations, 600 volts, XHHW or THHN/ THWN rayed 90 deg C in dry locations and 75 degC in wet locations, 600 Volts, or NEC Type RHW rated 75 degC, 600 volts.
   6. *Wire for Direct Burial or In Underground Duct or Conduit [U]:* Single USE-2 or multi-conductor, as indicated on the DRAWINGS, NEC Type USE-2 rated 90 degC, 600 volts.
   7. *Multi-Conductor Control Cable for Installation in Conduit [U]:* Size and number of conductors as indicated consisting of stranded annealed copper individual conductors insulated with 20 mils polyethylene and 10 mils PVC, rated 90 degC, 600 volts, color-coded in conformance with ICEA, cabled round with fillers and binder tape, and covered with an overall jacket of PVC.

B. Connectors For Splicing Copper Conductors
   1. Connectors for Straight Splicing Conductors; Up To and Including No. 8 AWG. Insulated solderless compression type.
      a. FCI/Burndy “Hylink”
      b. Ilsco
      c. Panduit
      d. Thomas & Betts “Sta-Kon”
   2. Connectors for Pigtail Splicing Conductors; Up To and Including No. 8 AWG. Solderless type; with a metallic insert connector within a plastic insulating cover having a temperature rating of 105 degC, 600 volts.
      a. Buchanan

b. Ideal
c. Scotchlok

3. Connectors for Straight Splicing Conductors; No. 6 AWG and Larger. Solderless compression 2-way type.
   a. FCI/Burndy Type YS-L
   b. Thomas & Betts 54500 Series
   c. Ilsco CT Series
4. Connectors for 3-Way Splicing Conductors; No. 4 AWG and Larger. Solderless compression type.
   a. FCI/Burndy YST
   b. Thomas & Betts 54700 Series
   c. Panduit

C. Lugs For Terminating Copper Conductors
1. Lugs for Terminating Power Conductors Up To and Including No. 8 AWG: Solderless type, manufacturer's standard, unless otherwise specified.
2. Lugs for Terminating Power Conductors No. 6 AWG and Larger: Solderless compression type, one hole for No. 6 AWG through No. 4/0 AWG inclusive, and two hole for larger sizes.
   a. FCI/Burndy Type YA-L (One Hole), YA-2L (Two Hole)
   b. Panduit
   c. Thomas & Betts Series 54000
   d. Ilsco Type CRA (One Hole), CRL2 (Two Hole)
3. Lugs for Terminating Conductors Larger Than No. 4/0 AWG: UL listed AL/CU compression type, two hole.
   a. FCI/Burndy YA-A-TN
   b. Thomas & Betts 60200 Series
   c. Ilsco 2ACL Series
4. Lugs for Terminating Control and Switchboard Wiring: Solderless compression type with tinned ring tongue.
   a. FCI/Burndy "Hylug"
   b. Ilsco
   c. Thomas & Betts "Sta-Kon"
   d. Panduit

D. Wire Labels
1. Wire Labels for Identification of Conductors; Per SECTION 16050-Appendix "A".

E. Insulating Tape
1. General Use Tape:
   a. Okonite Type CLF Catalog Series 602-20
   b. 3M Co. Scotch 33 Plus
   c. Plymouth/Bishop No. 4453
2. High Temperature Area Tape:
   a. 3M Co. Scotch 27
   b. Plymouth/Bishop Insulating Products "77 Plyglas"

F. Insulation For Waterproof Splices And Taps
   1. Insulation for Inline Splices: Heat shrinkable tubing with internal sealant or molded compound or gel splice kit, suitable for submersion in water as used in manholes and handholes for installations of 1000 volts or less.
      a. TYCO/Raychem – WCSW (Heat shrink or gel wrap.)
      b. 3M Co. Scotchcast 82-A Series (Resin).
   2. Insulation for Taps: Heat shrinkable sleeve with internal sealant or molded compound or gel splice kits, suitable for submersion in water, in manholes and handholes for installations of 1000 volts or less.
      a. TYCO Electronic/Raychem -CRSM-CT (Heat Shrink) or H-Frame GHFC (Gel).
      b. 3M Co. – Scotchcast 85 Series (Resin).

G. Miscellaneous
   1. Lubricating Compound:
      a. American Polywater Corp.
      b. Ideal 77 Yellow or Wire Lube
   2. Cable ties:
      a. Panduit PAN-TY Series.
      b. 3M 06220 Series.
      c. Thomas & Betts TY-RAP.

PART 3 EXECUTION

3.1 INSTALLATION

A. General
   1. Install wiring in raceway systems, as indicated and as specified, except where exposed wiring is indicated or specified. Install wiring only in completed raceway systems and when systems are protected from the weather. Install conductors continuous, without splices, between equipment, where possible. Where splices are required, make up splices in boxes; do not use fittings for same.
   2. Install phase and neutral conductors of each branch or feeder circuit in a single conduit except where paralleling circuits are indicated. Install paralleling circuits of identical makeup and length as the paralleled circuit, and terminate conductors at the same location, mechanically and electrically, at both ends, to ensure equal division of the total current between conductors.
   3. Continuously lubricate all nonarmored cables size #8 AWG and larger at the pull-in point of conduit systems with an approved compound compatible with conductor insulation or jacket.
   4. Install conductors in such a manner that the bending radius of any wire or cable is not less than the minimum recommended by ICEA and/or the manufacturer. Do not exceed manufacturer’s recommended values for maximum pulling tension applied to any wire or cable.
   5. Connect all power wiring to equipment such that phasing shall be A-B-C-N left to right, top to bottom and front to back, where possible, and permanently identify phasing on the structure or housing adjacent to bus. Phase identification A-B-C is equivalent to transformer phase identification X1-X2-X3 and H1-H2-H3.

6. Connect phase wiring to all 3 phase receptacles to insure the same phase rotation in all receptacles with interchangeable plugs.

B. Color Coding And Conductor Identification
   1. See SECTION 16050 - Appendix A.
   2. Provide single conductor cables having black insulation for power feeders and subfeeders. Do not color-code these circuits. Identify individual feeder and subfeeder conductors as to phase connection A, B, C by means of wire labels at each splice and termination.
   3. Identify individual phase conductors of branch power and lighting circuits as to phase and system voltage by means of color coding. Develop a unique color scheme for each different voltage system maintaining conformance with Section 210-5 of the NEC. Match existing schemes where such exist. Submit color schemes for approval of the ARCHITECT-ENGINEER prior to implementation. Provide conductor color coding by means of colored insulating materials or by means of colored wire labels attached to individual conductors in all outlet, pull or junction boxes and at all terminations.
   4. Identify each control circuit wire at each termination by means of wire labels. Provide identification as indicated. Mark the white marking strip of all control terminal blocks with the same identification as the connecting wire in permanent black ink.

C. Direct Burial
   1. Excavate trench for direct burial cable a minimum of 3 inches below the depth at which cable is to be installed. Provide a 3 inch minimum sand bed in the trench and thoroughly tamp. Install cable in the trench with sufficient slack for free movement of the cable due to expansion or contraction. Install more than one cable group in a common trench when so indicated; install cable groups with not less than 24 inches of sand fill between cable groups. After cable installation, provide a minimum of 3 inches of sand fill over the top of the cables; thoroughly tamp. Use Type NS sand per SECTION 01640. Refer to SECTION 01640 for compaction methods and requirements. Provide a concrete slab cover on top of the sand fill, not less than 2 inches thick and of a width equal to the trench, or in any case, not less than the overall dimension of the cable as installed. Provide underground hazard tape 12 inches below grade, directly above concrete slab, per SECTION 16050. Provide a rigid steel conduit sleeve for each group passing under a road or railroad and extend sleeve a minimum of 5 feet beyond each edge of the road or railroad. Fill end of sleeve with nonwater-soluble compound. Fill the remainder of the trench, and carefully tamp, with materials and compaction methods to suit project conditions per SECTION 01640.

D. Splices And Terminations
   1. Splice and terminate conductors with connectors and lugs as specified for the specific size and type of conductor. Do not splice direct burial cable underground. Indent all compression type connectors and lugs with tools as recommended by the connector or lug manufacturer.
   2. Thoroughly clean wire ends before connectors or lugs are applied.
   3. Whenever copper lugs are terminated on aluminum bus, use a Belleville washer and two tin or cadmium plated washers, one on each side in combination with aluminum joint compound on all contacting surfaces. Tighten and or torque bolts until Belleville washer is flat. Provide new Belleville washer after original use.

4. Insulate all bare surfaces of conductors with a minimum of four layers (half lap in two directions) of electrical insulating tape. On larger splices and terminals, build up connection with electrical insulating putty before applying tape, to eliminate both sharp edges and voids.
5. All splices and taps in manholes shall be waterproof, suitable for submersion in water. Splices and taps shall be made using split bolt or compression type connectors and insulating materials, as specified in Part 2 of this SECTION. Splices and taps in manholes and handholes shall be avoided whenever possible.

E. Cable Identification
1. See SECTION 16050 - Appendix “A”.
2. Identify cable groups and conduit at entering and leaving locations in manholes by means of 1/8 inch thick lead die-stamped tags with punched ears. Fasten tags around the cable group or conduit with No. 12 AWG copper wire.
3. Designate source and load, or feeder or cable identification on tags. Submit identification for the approval of the ARCHITECT-ENGINEER.

END OF SECTION

Revision History	
Date	**Rev. No.**
A	0
B	0
D	0
E	0
F	0
02-19-09	0

EY/ca
C:\d\timsdatasf\BROOKHAVEN_NATIONAL_LABORATORY\SF070003\200-PROJEXEC\280-SPEC\16120.doc

SECTION 16121

WIRING AND CONTROL DEVICES

PART 1 GENERAL

1.1 SUMMARY

A. Description Of Systems
   1. Provide lighting control and receptacle services as required, and all materials and equipment, including switches, receptacles, device plates, lighting contractors, as indicated or specified.

1.2 RELATED WORK SPECIFIED UNDER OTHER SECTIONS

1.3 SUBMITTALS

A. Furnish submittals for items that are identified in maintained contact this SECTION by a different typeface and a bracketed code (e.g., *Item [L]*). Refer to SECTION 01340 for definition of codes for types of submittals and the administrative requirements governing submittal procedure. Additional submittal requirements pertaining to this SECTION are specified herein under this Article.

B. Submit complete data on each item. Coordinate the items, as they relate to the work, prior to submittal.

PART 2 PRODUCTS

2.1 MATERIALS

2.2 WALL SWITCHES

A. Switch for Controlling Lighting Directly on AC Systems in General: Toggle-operated, brown (match existing in color), specification grade, composition base, heavy duty, maintained contact, flush, quiet type, with provision for back and side wiring, and rated 20 amperes, 120/277 volts AC.
   1. Hubbell/Bryant Electric 4900 Series.
   2. Cooper 2220 Series
   3. Hubbell HBL 1220 Series
   4. Leviton 1220 Series
   5. Pass & Seymour/Legend PS 20AC Series.

2.3 CONVENIENCE RECEPTACLES

A. 20 Ampere Duplex Convenience Receptacle; for 120 Volt, Single Phase Service. Straight blade, 2 pole, 3 wire, NEMA configuration 5-20R, rated 20 amperes, 125 volts, NEMA

performance standard, specification grade, for back and side wiring, brown (match existing) in color.

1. Cooper 5362 Series
2. Hubbell/Bryant Electric BRY5362 Series
3. Leviton 5362A Series
4. Pass and Seymour/Legrand 5362 Series.
5. Hubbell HBL5362 Series.

B. *20 Ampere Duplex Ground Fault Circuit Interrupter (GFCI) Convenience Receptacle [U]*; for 120 Volt, Single Phase Service. Straight blade, 2 pole, 3 wire grounding, NEMA configuration 5-20R, rated Class A, 20 amperes, 120 volts, 60 hertz, NEMA Standard WD1-4.02, heavy duty, brown (match existing), in color wired to provide protection as indicated on the DRAWINGS.

1. Cooper GF20 Series
2. Hubbell/Bryant Electric GF53A Series
3. Leviton 6899 Series
4. Pass & Seymour 2091 Series

2.4 POWER RECEPTACLES

A. *60 Ampere Combination Nonfusible Switch and Interlocked Receptacle [U]*; for 480 Volt, Three Phase Service. Consisting of a circuit-breaking 3 pole, 3 wire, grounding type receptacle rated 60 amperes, 600 volts AC, with angle type aluminum weather-resistant socket housing with spring door, interlocked with a 3 pole, 60 ampere, 600 volt, NEMA “HD” heavy duty, quick-make, quick-break, visible blade safety switch in a NEMA 12 enclosure. Provide interlocking such that the switch cannot be closed until the plug is fully inserted and the plug cannot be withdrawn unless the switch is open. Furnish one matching plug with each receptacle furnished (match existing).

B. Assembly manufacturer (Nonfusible):

1. Cooper/Crouse-Hinds WSRD63542 with plug APJ6485
2. Russellstoll FCSRA13-60 with plug 8418
3. Thomas & Betts/Russellstoll Heavy Service Everlok ESDWH84 14F00.

2.5 DEVICE PLATES

A. Device Plates in Finished Areas: Stainless steel No. 302 finish (match existing).

B. Device Plates in Utility and Similar Areas: Zinc or cadmium plated steel (match existing).

C. Device Plates in Wet or Moist Areas and Outdoors: Weatherproof type. Provide UL listed rain tight NEMA 3R cover on outdoor receptacle enclosures in wet locations. Assembly shall be clearly marked “Suitable For Wet Locations While In Use” (match existing).

1. Cooper Weather Box WIU Series
2. Hubbell/Raco-Bell Rayntite II series
3. Intermatic Flexi-Guard
4. Leviton 5900 Series
5. Tay Mac Corporation of Tempe, Arizona

6. Thomas &Betts/Red Dot CKNM Series

D. Screws. Provide screws having a finish matching the plate.

2.6 LIGHTING CONTACTOR

A. *Mechanically Held Type [U]*: Three pole, single throw, electrically-operated, mechanically held as indicated, with contacts rated 600 volts AC, 120 volt operating coil and a 480-120 volt control transformer fused and grounded as required, all in a NEMA 12 enclosure. Provide contact load rating as indicated.
   1. ASCO
   2. General Electric
   3. Russell Electric
   4. Square D
   5. Cutler-Hammer

PART 3 EXECUTION

3.1 INSTALLATION

A. Mount equipment at locations indicated.

B. Install receptacles and switches in outlet boxes as specified in SECTION 16050 unless otherwise specified in this SECTION. Mount receptacles and switches at uniform heights above the floor for various areas as indicated.

C. Install plates on flush mounted outlets with all four edges in continuous contact with finished wall surfaces without the use of plaster mats or similar devices. Do not use plaster or similar fillings. Install plates vertically, unless otherwise noted, with an alignment tolerance of 1/l6 inch.

D. Identify wiring and control devices as per SECTION 16050 - Appendix “A”.

END OF SECTION

Revision History	
Date	**Rev. No.**
A	0
B	0
D	0
E	0
F	0
02-19-09	0

EY/ca
C:\d\timsdatasf\BROOKHAVEN_NATIONAL_LABORATORY\SF070003\200-PROJEXEC\280-SPEC\16121.doc

THIS PAGE INTENTIONALLY LEFT BLANK

SECTION 16312

LOAD CENTER UNIT SUBSTATION-DOUBLE ENDED

PART 1 GENERAL

1.1 SUMMARY

A. Scope
1. Provide 1 Load Center Unit Substations, double-ended, indoor type, metal-enclosed construction, for 4,160 volt, three phase, three wire, 60 hertz service, consisting of two incoming line sections, two transformers, and a low voltage drawout air circuit breaker switchgear section, arranged as indicated on the DRAWINGS.

B. Reference Specifications And Standards
1. Electrical General Provisions - SECTION 16010.
2. Basic Materials and Methods - SECTION 16050.

1.2 RELATED WORK SPECIFIED UNDER OTHER SECTIONS

1.3 QUALITY ASSURANCE

A. Source Quality Control
1. Construction, Rating and Tests. Comply with the latest requirements of ANSI, IEEE and NEMA Standards.
2. Perform the following factory tests on the equipment furnished:
a. Transformer:
1) Resistance measurement, ratio, polarity and phase relation, excitation loss, excitation current, impedance and load loss, insulation and temperature tests per latest ANSI C57.12.00.
2) Noise level tests per NEMA Standard TR-27.
b. Low Voltage Switchgear:
1) Production tests per latest ANSI Standard C37.13 - 20 - 5.3.
2) Proof of ability to withstand specified symmetrical amperes.
c. Low Voltage Breakers:
1) Complete production tests per latest ANSI Standard C37.13 - 8.3.
2) Proof of ability to pass latest ANSI Standard C37.13 - 8.2.5 (Short Circuit Interrupting Test).
3) Proof of ability to pass latest ANSI Standard C37.13 - 8.2.4 (Short Time Current Test).
3. Do not perform transformer temperature tests, momentary tests on bus, and momentary and interrupting tests on breakers where such tests have been performed on essentially identical equipment under actual conditions, not simulated, and test data is available.

B. Installation And Checkout
1. Provide the services of a fully qualified field engineer at the site, as may be required by the OWNER’S REPRESENTATIVE, to provide guidance during the installation of the

switchgear, to check out the work of the installing contractor, to instruct the OWNER'S REPRESENTATIVE in the care and operation of the equipment, and to be present while the relays are being calibrated and tested by the OWNER'S REPRESENTATIVE.

2. The field engineer will be required to inspect the installation, make whatever adjustments he deems necessary to assure that the substation is ready to be energized and put into service, and shall be authorized to sign the following statement in behalf of the Supplier:

"The undersigned certifies that, as a responsible agent of his organization, he has inspected the equipment, and that is ready to be placed in service.

"The equipment has been field inspected, adjusted per the manufacturer's instruction booklets, where necessary, and complies with the approved shop drawings."

1.4 SUBMITTALS

A. Furnish submittals for items that are identified in this SECTION by a different typeface and a bracketed code (e.g., *Item [D]*). Refer to SECTION 01340 for definition of codes for types of submittals and the administrative requirements governing submittal procedure. Additional submittal requirements pertaining to this SECTION are specified herein under this Article.

B. *Shop Drawings [D,P]:* Submit manufacturer's certified prints showing assembly of units, outline dimensions and weights, shipping lengths, location of conduits, wiring diagrams, installation drawings, rigging instructions, and a complete bill of material, for each substation. Coordinate incoming line, transformer and 480V switchgear on the same submittal.

C. *Test Reports [T]:* On all factory tests. Submit certified test reports of previous tests on essentially identical equipment under actual conditions, not simulated, for transformer temperature test, momentary test on bus, and momentary and interrupting tests on breakers.

D. *Guarantee [G]* the unit to meet the operating conditions, capacity and performance conditions as specified and to remain serviceable for two years after project acceptance. If either the unit or accessories fail to meet operating requirements or if failure of any part occurs during the guarantee period, rework or replace the affected items promptly to meet the CONTRACT requirements at no cost to the OWNER.

1.5 MAINTENANCE DATA AND OPERATING INSTRUCTIONS

A. Furnish, per SECTION 01730, operating and maintenance manuals for instructions for operation and maintenance of equipment and list of recommended spare parts.

1.6 ACCESSORIES

A. Furnish one complete set of special tools and accessories required for the operation and maintenance of the unit substation equipment. Include:
   1. Rackout handle for breakers.
   2. Integral circuit breaker lifting and handling device, hoist type, capable of handling all sizes of breakers in the substation, as a permanent part of each switchgear structure.

1.7 PRODUCT DELIVERY AND HANDLING

A. Coordination
   1. The manufacturer shall furnish to the Contractor receiving and installing the equipment, all information relative to weights, shipping, sections, parts, assemblies and physical dimensions of all equipment. The manufacturer shall notify the OWNER'S REPRESENTATIVE of delivery one (1) week in advance of shipment.

B. Disassembly and Shipment
   1. Upon completion and assembly of the equipment specified herein, if found necessary for shipping and/or installation purposes to disassemble, all parts shall be match-marked to facilitate erection in the field. The substation shall be shipped in Sections which will pass through an 8' x 10' floor hatch (or door) opening. All units shall be suitably braced and packed for shipping to prevent breakage or distortion while in transit.
   2. All crates, boxes and cartons shall be clearly marked in order to immediately identify the equipment. Shipping invoices shall show the crate, box or carton identification number.

PART 2 PRODUCTS

2.1 FABRICATION AND MANUFACTURE

A. Manufacturers
   1. Square D
   2. General Electric
   3. Siemens Energy & Automation
   4. Eaton/Cutler Hammer
   5. ABB Incorporated

B. Incoming Line Air Terminal Compartment
   1. Incoming Line Air Terminal Compartment: Each consisting of a metal enclosed compartment on the primary terminal side of the transformer and shall include means for supporting and terminating the incoming power cables.
   2. Provide adequate space for the makeup and bracing of stress cones. Equip incoming line terminals with solderless compression type lugs, manufacturer's standard, for cable size indicated. Provide bolted removable plates for access to the compartment.
   3. Cable will enter from above.

C. Transformer Sections (Dry Type)
   1. Transformer Enclosure: Fabricated steel framework with sheet steel bolted removable panels connected to switchgear on one end and the incoming line section on the other end. Provide base construction suitable for using rollers or skidding in any direction. Provide suitable insulating barrier at the secondary bus entrance to prevent passage of ionized gases or rodents between the low voltage switchgear enclosure and the transformer enclosure.
   2. Louvers: Provide adequate louvers to insure proper cooling.
   3. Provide vibration isolation between the core and coil support system and the base of the transformer case to reduce the transmission of vibration to the base and the external

enclosure. The vibration isolators shall be a minimum 1” thick, 40 durometer elastomer pads, complete with anchor bolts and vibration isolation washers, to provide a vibration isolation efficiency of a minimum of 85%. Connect transformer bus to the switchgear bus with flexible connections to minimize vibration transmission to the switchgear.

4. Transformer noise levels shall not exceed the values established in NEMA Standards publication No. TR-1.
5. Transformer Rating: 2,500 KVA, three phase, 60 hertz, 4,160 volt delta primary, 480/277 volt wye secondary, with primary voltage winding BIL of 60 KV minimum. Bring the midpoint (wye) connection of the transformer secondary out insulated as a full capacity bus, along with the three phase buses, and bolt the midpoint to the neutral bus in the switchgear.
6. Transformer: Dry-type, air-cooled, 220 degC temperature class insulation system, 150 degC rise above an ambient air temperature of 30 degC average (40 degC maximum) for any 24 hour period at full load continuous operation on any tap.
7. Impedance: 5.75% on a 2,500 KVA base with NEMA Standard 7-1/2% tolerance.
8. Fan Cooling: Provide all devices and wiring for fan cooling to increase the self-cooled rating to 133%. Provide a 480/120 volt, single phase transformer connected on the line side of the transformer main secondary breaker through current limiting fuses for service to fans and controls.
9. Thermal Relay: Provide a thermal relay detecting the temperature of the cooling air discharging from the top of the windings. Two contacts on the thermal relay shall close when the transformer temperature exceeds that of the natural draft rating. Wire one thermal relay contact to a suitable terminal box for the OWNER’S alarm tie-in. Use the other contact to start the fans.
10. Taps: Provide four full capacity 2-1/2% taps, two above and two below rated voltage in the high voltage winding. Bring out taps to a suitable tap changing terminal board accessible by removing bolted-on covers, for tap changing with transformer de-energized.
11. Insulating Barriers: Provide insulating barriers between coils.

D. Switchgear Section
1. Switchgear Assembly: Consisting of one transformer main secondary breaker, feeder breaker positions, and spaces fully equipped to receive future feeder breaker units.
2. Transformer Main Secondary Breaker:
   a. Breaker: Electrically operated, drawout type, three pole, single throw, 600 volt, 60 hertz, 4000 ampere frame, 65,000 RMS symmetrical ampere interrupting rating at 480 volts, of ampere trip rating as indicated, air circuit breaker.
   b. Equip breaker with an electrically operated stored energy type of mechanism for quick-make closing and with a field adjustable solid state selective trip device providing long time overcurrent tripping, short time overcurrent tripping with i^2t function, and ground fault protection, also with i^2t function, complete with arc quenchers, interpole barriers, position indicator, charge/close/open push-buttons and manual override feature, 120 volt AC shunt trip coil, auxiliary switch for remote signaling and manual operating handle.

c. Provide a microprocessor-based trip unit as part of an integrated power protection, monitoring, and control system. This unit shall provide long time over current tripping, short time over current tripping with i^2t function and ground fault protection, also with i^2t function. In addition provide the following features:
   1) Protective functions for undervoltage, voltage unbalance, current unbalance and power reversal.
   2) Metering functions: The following real time data for each breaker shall be available for display:
      a) Current for each phase.
      b) RMS phase to neutral voltage for each phase.
      c) RMS phase to phase voltage for each phase.
      d) Energy reading (kWh). Based on real power and time.
      e) Present demand load (kW).
      f) Peak demand load (kW).
      g) Reactive power (kvar).
      h) Real power (kW).
      i) Total power (kva) for each phase.
      j) Power factor for each phase.
      k) Percent ampere peak capacity.
      l) Frequency of the line voltage for each phase.
   3) Event reporting: The following data shall be provided:
      a) Type of event: Long time overcurrent trip, short time overcurrent trip, instantaneous trip, ground fault trip, other protective trips, and abnormal conditions.
      b) Current at time of event.
      c) Date and time of event.
      d) Identification of breaker.
      e) Number of the event in the order recorded.
   4) Status reporting: The following data shall be provided:
      a) Breaker status: The information shall include the breaker position over current status, protective-functions status and result of continuous self-diagnostic breaker electronic check.

d. Provide an interlock arrangement that will prevent breaker withdrawal from or return to the operating position with main contacts closed, as well as an interlock to prevent closure of the breaker in any position except test or normal.

e. Equip each transformer main secondary breaker with a key interlock complementary to the one on the tie breaker.

f. Provide means for padlocking the breaker in the test and withdrawn positions such that the breaker cannot be moved from the position in which it is padlocked.

3. Switchgear Accessories:
   a. Two control power transformers, rated 480/120 volts complete with primary current limiting fuses for breaker tripping and fan power. Equip breaker compartment with separate protection for the trip circuit. Provide an automatic transfer of control power from a failed source to the remaining available source.
   b. Provide an integrated power protection, monitoring, and control system having overload and short circuit protection, protective relaying, metering, event reporting, breaker status reporting, and a remote communications link with discrete input monitoring capabilities for the 480 or 480Y/277 volt metal-enclosed low-voltage

power circuit breaker distribution switchgear. Each switchgear section shall be provided with a monitoring unit which shall communicate with every circuit breaker trip device and every instrument transformer in the section. Provide an AC control power source for monitoring and communication devices in the section. Provide a non-volatile memory for data storage. Provide setup value editing capabilities in the monitoring unit.

c. The monitoring unit shall be mounted in a compartment located above the main breaker. The unit shall have a keypad and a digital display. Provide local graphic data viewing capability which includes currents, voltages, real power, and event logs. The keypad shall function to set and modify system parameters.

d. The remote communication link shall include an RS232 or RS485 data communications port. The link between the monitoring unit and the Brookhaven management system shall be field verified and a gateway, as required, shall be provided under the CONTRACT to tie the two systems together.

4. Feeder Breakers:

a. Breakers: Manually operated, drawout type, single throw, 600 volt, 60 hertz, 800, 1600 ampere frame, 65,000 RMS symmetrical ampere interrupting rating at 480 volts, of ampere trip rating as indicated, air circuit breaker.

b. Equip breakers with a manually operated stored energy type mechanism for quick-make closing and with a field adjustable solid state selective trip device, providing long time overcurrent tripping, short time over current tripping with i^2t function, instantaneous short circuit tripping, and ground fault protection, also with i^2t function, complete with arc quenchers, interpole barriers, position indicator, manual trip button, manual operating handle and auxiliary switch for remote signaling.

c. Provide a microprocessor-based trip unit as described for the Transformer Main Secondary Breaker. Include instantaneous short circuit tripping.

d. Provide an interlock arrangement that will prevent breaker withdrawal from or return to the operating position with main contacts closed, as well as an interlock to prevent closure of the breaker in any position except test or normal.

e. Provide means for padlocking the breaker in the test and withdrawn positions such that the breaker cannot be moved from the position in which it is padlocked.

f. Equip all feeder breaker positions with solderless compression type lugs, manufacturer's standard, for cable sizes indicated. Cable will enter the switchgear from above or below.

g. Equip spare feeder breaker positions with breakers and with all features identical to feeder breakers.

h. Equip all future feeder breaker positions with all features identical to feeder breakers less the breaker drawout element.

5. Tie Breaker: 4000 ampere frame with the same features as described for transformer main secondary breakers. Two transformer main secondary breakers and the tie breaker shall be key interlocked so that not more than two of the three breakers can be closed at one time.

6. Ground Fault Protection Note: All ground fault protection shall be suitable for 4 wire service.

E. General Features

1. Bus: Make up all bus of high conductivity bar copper or aluminum, and mount on rugged insulating supports. Provide bus with continuous and short circuit current ratings equal to those of the transformer main secondary breaker.
2. The unit substation manufacturer shall be responsible to coordinate the design of the substation with the manufacturer of feeder busways where indicated and shall build into the substation(s) additional bus work with run back and transition sections to accommodate all connections. To accomplish this coordination, contact the busway manufacturer and contractor performing this work and base the arrangement on certified shop drawings. Provide all additional bus work and transition sections for complete installations.
3. Ground Bus: Provide a 1/4 inch x 2 inch copper ground bus the full length of the switchgear.
4. Neutral Bus: Provide a one-half capacity neutral bus the full length of the switchgear. Insulate the neutral bus from the switchgear structure and connect to the ground bus at one point by means of a disconnectable link.
5. Load Side Terminal Connections: Make all feeder breaker positions readily accessible from the rear for making up cable connections. Silver-plate contact surfaces of all bus and connections.
6. Switchgear Supporting Structure: Welded sheets and shapes, with rear portion containing bus bars, supports, and current transformers, with space for feeder cables entering from above or below. Do not locate terminal blocks, fuse blocks, or other accessory items in the rear bus compartments. Place circuit breakers and operating mechanisms in the front portion.
7. Individual Air Circuit Breaker Enclosures: Sheet steel compartments lined with arc resisting barriers where necessary and sealed to prevent flow of ionized gases into adjacent circuit breaker or bus compartments. Enclose each circuit breaker at the front by a hinged panel.
8. Louvers: Provide grille type louvers in doors for ventilation of ionized gases and in any other vertical part of the structure where necessary to insure a maximum internal air temperature of 15 degC rise above room temperature.
9. Bolt adjacent frames together and ship the entire structure on a steel base suitable for setting on a finished concrete floor.
10. Do all wiring within the switchgear with single conductor, stranded copper, tinned wire, with NEC Type SIS insulation for 600 volts working and 1500 volts test, rated 90 degC for switchboard wiring.
11. Make connections between hinged and stationary panels with terminal blocks and extra flexible wire having the same insulation as the panel wiring and secure wire between terminal blocks with wire cleats to prevent movement at the terminal blocks.
12. Provide vertical wireways where required.
13. Provide molded type terminal blocks with washer head binding screws complete with white marking strip.
14. Connect all current transformer secondary leads to accessible short circuiting terminal blocks with provisions for retention of the shorting devices.
15. Provide plug-in terminal blocks for all conductors to be continued across all shipping splits.
16. Provide wire markers at each end of all control wiring conductors.

17. Finish exterior and interior surfaces of the entire assembly with a gray synthetic lacquer or enamel, ANSI Standard No. 61.
18. Provide nameplates with suitable engraved letters on each incoming primary section, on each compartment door and for each control device on the front of the compartment doors. Use laminated black plastic nameplates with white engraved letters.
19. Stencil identification adjacent to all relays and control devices located behind compartment doors.

PART 3 EXECUTION

3.1 MANUFACTURING, DELIVERY AND FIELD SERVICES

A. General
1. The manufacturer shall design, build, test and arrange for shipment of the substations.
2. The manufacturer shall prepare and deliver the required drawings and instruction manuals with the equipment.

B. Site Preparation
1. The OWNER will prepare the site for installation of the equipment.

C. Installation
1. The OWNER will arrange for installation of the equipment.
2. Shipping splits shall be able to pass through a 8’ x 10’ hatch (or door) opening.
3. The equipment will be installed in accordance with local codes and the manufacturer’s recommendations.

3.2 FIELD QUALITY CONTROL

A. Field Services
1. Engineering field services shall include, but not be limited to the following:
2. Incoming line sections.
   a. Re-examine switches for evidence of shipping storage, or handling damage.
   b. Identify damaged parts and reorder.
   c. Determine that shipping devices and tags have been removed or direct the removal of blocking.
   d. Operate manually to check operation of auxiliaries and interlocks. Check contact wipe, gaps, and clearances as described in manufacturer’s instruction book.
   e. If equipped with electrical operation, test several times in accordance with instruction book.
   f. Verify key interlocks.
   g. Furnish check list copy to service engineer at time of inspection.
   h. Sign and return checkout list to OWNER stating that equipment is ready for energization.
3. Transformers
   a. Re-examine each transformer and accessories for evidence of shipping, handling, or storage damage.

b. Identify damaged parts and assist purchaser/user in filing claims, ordering, and expediting parts.
c. Determine that shipping devices have been removed or direct removal of braces and blocking.
d. Review field assembly work and determine to the extent possible that work is done in accordance with instructions.
e. Check temperature relays, meters, and alarms for correct installation.

4. Secondary switchgear
   a. Re-examine equipment for evidence of parts that may be damaged.
   b. Identify damaged parts and reorder. Expedite equipment delivery.
   c. Determine that shipping devices and tags have been removed or direct removal of wires, blocks, and braces that remain.
   d. Ensure that line-up is level, secured to foundations, physically connected to grounding system, and doors swing correctly.
   e. Identify adjustment required to meet specifications.
   f. Examine insulation and assembly of primary bus, ground bus, control relaying and metering connections at shipping splits.
   g. Identify and direct changes or corrections necessary.
   h. Test for circuit integrity with a megohm meter. Visually inspect portion of bus between transformer secondary and main breaker or disconnect transformer and check the bus with megohm meter if conditions dictate.
   i. Check that primary and control connections are made. Ensure that control voltages are consistent with equipment furnished.
   j. Check integral breaker lifting or engaging device for correct operation and attachment to the housing.
   k. Inspect individual breakers, insert breakers in housings, check positioning and equipment interlocks.
   l. Operate racking mechanisms to demonstrate smooth operation.
   m. Identify and direct adjustments required to achieve performance.
   n. Energize control circuits and test the integrity of close and trip circuits by opening and closing control switches and relay contacts to trip inserted breakers. If unit is equipped with static devices, test with a static test set.
5. Breakers
   a. Re-examine breakers for evidence of shipping, storage, or handling damage.
   b. Identify damaged parts and reorder.
   c. Determine that shipping devices and tags have been removed or direct the removal of blocking.
   d. Operate breakers manually and electrically to check operation of auxiliaries and interlocks.
   e. Check contact wipe, gaps, and clearances as described in the manufacturer’s instruction book.
6. Set and calibrate meters, instruments, protective devices, trip units and control in conjunction with ARCHITECT-ENGINEER’S recommendations depicted on DRAWINGS, and SPECIFICATIONS.
7. The service engineer shall also provide on-site training for the OWNER’S operating and maintenance personnel in proper operation and maintenance of the equipment. The training period of two days will be per OWNER’S schedule.

3.3 INSTALLATION

A. Provide a concrete pad with level surface four (4) inches above the finished floor in the location indicated for the equipment.

B. If recommended by the equipment manufacturer or indicated, provide leveling channels flush with the surface of the equipment pad.

C. Assemble and anchor the equipment.

D. Perform and report upon all ELECTRICAL ACCEPTANCE TESTS and adjustments required by SECTION 16999 of this SPECIFICATION.

E. Furnish the services of a qualified service engineer at the Project Site for not less than three consecutive days for de-bugging and checking of the equipment after installation. The service engineer shall verify calibration of all relays and instruments. The service engineer shall also train the operating and maintenance personnel in proper operation and maintenance of the equipment.

END OF SECTION

Revision History	
Date	**Rev. No.**
A	0
B	0
D	0
E	0
F	0
02-19-09	0

EY/ca
C:\d\timsdatasf\BROOKHAVEN_NATIONAL_LABORATORY\SF070003\200-PROJEXEC\280-SPEC\16312.doc

SECTION 16316

MEDIUM VOLTAGE METAL CLAD SWITCHGEAR

PART 1 GENERAL

1.1 SUMMARY

A. Scope
1. Furnish and deliver to the Project Site 15KV outdoor and 5KV indoor, metal clad, dead front, vacuum break circuit breaker switchgear assemblies, arranged as indicated on the DRAWINGS. The maximum size of any shipping section shall not exceed four compartments of switchgear. Each switchgear assembly shall be designed and constructed to permit additional feeder circuit breaker enclosures to be added in the future, and shall be complete with all appurtenances and accessories.
2. 120 Volt control power for 5KV indoor switchgear and 120 Volt control and heater power for 15KV outdoor switchgear shall be provided by the OWNER.
3. Provide, shipped loose, all necessary splice plates, connectors, cable, hardware, etc., required for field interconnections of switchgear sections.
4. Furnish the services of a qualified service engineer at the Project Site for not less than three consecutive days of service as defined under Article “INSTALLATION AND CHECKOUT.
5. Overcurrent and directional overcurrent relays have been specified with time current characteristics and with current tap units which are intended to be coordinated with devices being installed both upstream and downstream of the switchgear. If at a later time it should be determined that a different time current characteristic or tap range is more desirable, state in the proposal the latest date at which a change of this nature can be accomplished without affecting either the delivery schedule or the price.

B. Description Of Service
1. Switchgear. Outdoor switchgear suitable for use on a 13.8 KV, 3 phase, 3 wire, 60 hertz, low resistance grounded system capable of delivering 40,000 RMS symmetrical amperes maximum fault current. Indoor switchgear suitable for use on a 4.16 KV 3 phase, 3 wire, 60 hertz, low resistance grounded system capable of delivering 40,000 RMS symmetrical amperes maximum fault current.

C. Reference Specifications
1. Electrical General Provisions - SECTION 16010.
2. Basic Materials and Methods - SECTION 16050.

1.2 RELATED WORK SPECIFIED UNDER OTHER SECTIONS

1.3 QUALITY CONTROL

A. Standard Of Quality
1. Furnish equipment meeting all applicable requirements of IEEE, and UL Codes and Standards.

2. Codes and Standards. Conform to the following:
   a. American National Standards Institute (ANSI)

1)	C37.04	AC Power Circuit Breaker Rating Structure
2)	C37.06	Preferred Ratings of Power Circuit Breakers
3)	C37.09	Test Procedure for Power Circuit Breakers
4)	C37.010	Application Guide for Power Circuit Breakers
5)	C37.11	Power Circuit Breaker Control Requirements
6)	C37.20	Switchgear Assemblies and Metal-Enclosed Bus
7)	C37.90	Standard Relays and Relay Systems Associated with Electric Power Apparatus
8)	C37.100	Definitions for Power Switchgear

   b. National Electrical Manufacturers Association (NEMA)

1)	SG-2	High Voltage Fuses
2)	SG-4	Power Circuit Breakers
3)	SG-5	Power Switchgear Assemblies

B. Installation And Checkout
   1. Provide the services of a fully qualified field engineer at the site, as directed by the ARCHITECT-ENGINEER, to provide guidance during the installation of the switchgear, to check out the work of the installing contractor, to instruct the OWNER in the care and operation of the equipment, and to be present while the relays are being calibrated and tested.
   2. The field engineer will be required to inspect the installation, make whatever adjustments he deems necessary to assure that the switchgear is ready to be energized and put into service, and shall be authorized to sign the following statements in behalf of the manufacturer:
      a. “The undersigned certifies that, as a responsible agent of his organization, he has inspected the equipment, and that it is ready to be placed in service.
      b. “The equipment has been field inspected, adjusted per the manufacturer’s instruction booklets, where necessary, and complies with the approved shop drawings.”

C. Source Quality Control
   1. After completion of fabrication, the assembled switchgear shall be thoroughly factory-tested for function and compliance with the SPECIFICATIONS. Certify to the ARCHITECT-ENGINEER that the switchgear has been so tested.

1.4 SUBMITTALS

A. Furnish submittals for items that are identified in this SECTION by a different typeface and a bracketed code (e.g., *Item [L]*). Refer to SECTION 01340 for definition of codes for types of submittals and the administrative requirements governing submittal procedure.

B. *Assembled switchgear [B,D,P]:* Submit certified outline drawings showing overall dimensions of the switchgear,. Drawings shall indicate shipping units and recommended front, rear, side and top clearances. Indicate estimated weight of each shipping section and shipping weight of circuit breaker draw-out units, etc. Show mounting or anchor bolts required, space available at top and bottom for entrance of medium voltage cables and conduit and for low voltage control

cable and conduit. Provide a complete Bill of Material (Device Summary) for all items incorporated in the assembled switchgear.

C. *Single Line and Wiring Diagrams [D]:* Show main bus, circuit breakers, all current and potential transformers, meters, instruments, relays, control and selector switches, and associated equipment. Provide complete connection and interconnection wiring diagrams for switchgear and ancillary units.

D. *Test Reports [T]:* Submit manufacturer's factory tests. Submit copies of previous tests on essentially identical equipment under actual conditions, not simulated, for momentary test on bus, and momentary and interrupting tests of breakers.

E. *Guarantee [G]:* Warrant that:
   1. The equipment and auxiliaries, meet the operating conditions, capacity and performance specified, and will remain in serviceable working condition, for a period of one year from date of final completion and acceptance of the system by the OWNER; and that
   2. If the equipment, or auxiliaries, fail, or fail to meet any of the specified requirements, the equipment or auxiliaries shall promptly be reworked or replaced as necessary to comply with the CONTRACT requirements, all at no cost to the OWNER, and the guarantee shall be extended for one year from date of acceptance of the reworked or replaced equipment or auxiliary.

1.5 MAINTENANCE DATA AND OPERATING INSTRUCTIONS

A. Furnish, per SECTION 01730, manufacturer's general instructions for operation and maintenance of equipment, and parts list with list of recommended spare parts.

PART 2 PRODUCTS

2.1 FABRICATION AND MANUFACTURE

A. Manufacturers
   1. General Electric.
   2. Siemens Energy & Automation.
   3. Square D.
   4. Eaton/Cutler Hammer.

B. Switchgear
   1. Outdoor switchgear shall be weather proof enclosed metal clad, dead front, one-high construction. Indoor switchgear shall be totally enclosed metal clad, dead front one-high and two high construction as indicated on the drawings. Provide transition section for bus connection to medium voltage metal enclosed fused switch switchgear (see drawings and specification section 16318. Enclosures shall be constructed of not less than No. 11 gage steel, formed and framed for rigidity. Front panels and framework shall be of welded construction with all burrs ground smooth. Front panels shall be of hinged construction with locking handles. Rear and side panels shall be removable, bolted in place. Hinged

rear panels are acceptable but will require lockable handles and captive bolts for fastening.

2. Housing and main busing shall be arranged as indicated on the DRAWINGS. The switchgear shall be designed and constructed to permit additional feeder circuit breaker enclosures to be added in the future.
3. Auxiliary compartments where required for bus transition, potential transformer draw-out carriages, and associated hardware, shall be of the same height and depth as the circuit breaker compartments.
4. Circuit breaker compartments shall be for horizontal draw-out type circuit breaker elements. Compartments shall include automatic safety shutters which will block access to the stationary circuit breaker stabs unless the drawout element is locked into the operating position. The mechanism shall give positive indication of the breaker position, i.e., engaged, test and disconnected.
5. All compartments shall have interior compartmentation to provide full isolation for:
   a. Circuit breaker elements.
   b. Main power bus and current transformers.
   c. Cable termination compartments.
   d. Potential transformers.
   e. Low voltage relaying, metering, fusing and control.
6. Cable termination compartment at the rear of each incoming line compartment shall be full height and shall provide adequate space for stress cone termination in outdoor and indoor switchgear for cables as indicated on one line diagram on Drawing E-601. Design shall be such that feeder cables can enter from above or from below as indicated on the DRAWINGS. Incoming main cables will enter from above.
7. All enclosures shall be thoroughly cleaned and degreased after fabrication, bonderized and primed with zinc chromate. Finish shall be gray synthetic lacquer or enamel, per ANSI Standard No. 61 (match existing switchgear).

C. Circuit Breakers
1. 15 KV Incoming Line, Bus Tie and Feeder Circuit Breakers shall have the following characteristics:
   a. Type. 3 pole, vacuum circuit breaker
   b. Continuous current rating: 1200 amperes (Feeders. 1200 amperes)
   c. Voltage rating, operating: 13.8 KV, 60 hertz
      Maximum: 15 KV
      B.I.L.: 95 KV
   d. Nominal Interrupting Rating: 500 MVA
   e. Interrupting Capability: 28,000 RMS amperes, at 13.8 KV
   f. Close and Latch Capability: 37,000 RMS amperes, at 13.8 KV
   g. Interrupting Time: 5 cycles
   h. Breaker Control and Operation: 120 Volts, A.C.
2. 5KV Incoming Line, Bus Tie and Feeder Circuit Breakers shall have the following characteristics:
   a. Type. 3 pole, vacuum circuit breaker
   b. Continuous current rating: 1200 amperes (Feeders. 1200 amperes)
   c. Voltage rating, operating: 4.16 KV, 60 hertz

	Maximum:	5 KV
	B.I.L.:	60 KV
d.	Nominal Interrupting Rating:	250 MVA
e.	Interrupting Capability:	29,000 RMS amperes, at 4.16 KV
f.	Close and Latch Capability:	58,000 RMS amperes, at 4.16 KV
g.	Interrupting Time:	5 cycles
h.	Breaker Control and Operation:	120 Volts, A.C.

3. All circuit breaker operating mechanisms shall be of the stored energy type and shall be mechanically and electrically trip-free. Stored energy springs shall be charged by an electric motor mechanism operating from the control power (120 volts, A.C.). Interlocks shall be provided to prevent either engaging or disengaging the circuit breaker unless it is in the “tripped” position. Operating mechanisms shall be arranged so that all springs are discharged before the breaker can be racked into the “disconnected” position.
4. In addition to any auxiliary contacts required for circuit breaker control, provide at least four isolated, convertible auxiliary contacts suitable for low-current monitoring and wired to accessible terminal blocks for use by the OWNER.

D. Bus Work

1. Buses shall be of hard drawn copper bars. Cross sectional area of bus shall be such that current density will not exceed 1000 amperes per square inch. Contact surfaces shall be designed so that the current density across contact surfaces will not exceed 200 amperes per square inch. All contact surfaces shall be silver plated. All bolts, nuts, washers, etc., required for assembly of buses shall be plated to resist corrosion.
2. NEMA standard phase rotation shall be maintained throughout.
3. The continuous current rating of the main bus, for its entire length, shall be 1200 amperes. Bus connections to the incoming line circuit breaker, including extensions from the line side of the incoming line circuit breaker into the cable entrance compartment shall also have a continuous rating of 1200 amperes.
4. Bus taps to the feeder circuit breakers and extensions from the load side of these circuit breakers into the cable termination compartments shall have a continuous rating of 1200 amperes.
5. All bus bars, including taps and extensions shall be adequately braced and supported to withstand short circuit currents up to and including the full close and latch capability of the circuit breakers.
6. Bus support insulators shall be porcelain or cast cycloaliphatic plastic material. “Glastic” (glass-polyester) insulators are not acceptable.
7. Should it be necessary to split the main bus at shipping section breaks, provide the necessary splice plates and hardware for field installation. The main bus shall be drilled and silver plated at the ends to permit extension into future feeder circuit breaker compartments.
8. Bus bars, including taps and extensions shall be individually insulated with an epoxy insulation coating applied by a fluidized bed process, or an equivalent coating. Insulation shall be of flame resisting, self extinguishing, non-hygroscopic, non-tracking material. Factory joints shall be insulated by tape or molded insulating covers. Manufacturer shall furnish an adequate supply of insulating material for field insulation of splice plates at any shipping breaks.

9. At incoming line and feeder circuit breakers the upper terminals shall connect to the main bus, the rear or lower terminals shall connect to bus extensions into the cable termination compartments.
10. Bus extensions from the main circuit breaker into the cable termination compartment shall terminate in pressure type cable connectors. Bus extension from each of the feeder circuit breakers into the cable termination compartments shall terminate in pressure type cable connector. Each cable connector shall accommodate a stranded copper conductor as indicated on one line diagram on Drawing E-601.
11. Provide a 2 inch by 1/4 inch copper ground bar running the entire length of each switchgear assembly. Ground bus shall be located near the bottom rear of the cable termination compartments, to be accessible when the rear panels of the enclosure are removed. Bond the ground bus to each enclosure structure and extend the bus into each circuit breaker compartment to engage with the grounding shoe on the circuit breaker draw-out mechanism. In each main cable termination compartment the ground bus shall be provided with one clamp pressure type connector suitable for terminating a 250 Kcmil stranded copper ground conductor. In each feeder cable termination compartment the ground bus shall be provided with one clamp pressure type connector suitable for terminating a No. 4/0 AWG stranded copper ground conductor.
12. Vacuum breakers shall be provided with surge arresters for the suppression of switching surges. Surge arresters shall be of the zinc oxide type.

E. Lightning Arresters
1. Provide lightning arresters for each incoming line. A total of three arresters are required for each line, one per phase. Lightning arresters shall be connected immediately ahead of the line side terminals of the Incoming Line circuit breaker, and may be physically mounted in the cable termination compartment. All connections to lightning arresters shall be insulated.
2. Lightning arresters shall be of the station type.
   a. ABB Type IMX or Type Exlim Q
   b. General Electric “Tranqell XE”
   c. Hubbell/The Ohio Brass Company “Dynavar” Type VL

F. Microprocessor-based trip and metering unit.
1. Provide a microprocessor-based trip unit as part of an integrated power protection, monitoring, and control system. This unit shall provide long time over current tripping, short time over current tripping with i^2t function. In addition provide the following features:
   a. Protective functions for undervoltage and power reversal.
   b. Metering functions: The following real time data for each breaker shall be available for display:
      1) Current for each phase.
      2) RMS phase to phase voltage for each phase.
      3) Energy reading (kWh). Based on real power and time.
      4) Present demand load (kW).
      5) Peak demand load (kW).
      6) Reactive power (kvar).
      7) Real power (kW).
      8) Total power (kva).

9) Power factor.
10) Percent ampere peak capacity.
11) Frequency of the line voltage.

c. Event reporting: The following data shall be provided:
1) Type of event: Long time overcurrent trip, short time overcurrent trip, instantaneous trip, ground fault trip, other protective trips, and abnormal. Conditions.
2) Current at time of event.
3) Date and time of event.
4) Identification of breaker.
5) Number of the event in the order recorded.

d. Status reporting: The following data shall be provided:
1) Breaker status: The information shall include the breaker position over current status, protective-functions status and result of continuous self-diagnostic breaker electronic check.

e. Communication link: The remote communication cable shall be tied into the Brookhaven monitoring system. Field verify tie-in point with Brookhaven and electrical contractor to provide gateway or as required, if required, to tie the two systems together.

G. Circuit Breaker Control Switches
1. Circuit breaker control switches shall be of the rotary cam operated type with spring return and pistol-grip handles. A red indicating light shall be provided, wired to monitor the trip circuit and to indicate “breaker closed” status. A green indicating light shall be provided, wired to indicate “breaker open” status.
a. Electroswitch Type W-2.
b. General Electric Type SB-1.
2. Indicating lights shall be:
a. Eaton/Cutler Hammer Type EZC.
b. General Electric Type ET-16.

H. Switchboard Wiring
1. Do all control wiring within the switchgear with single conductor, Type SIS, flexible stranded copper, tinned wire, with insulation for 600 volts working and 4000 volts test, rated 90 degC for switchboard wiring.
2. Terminate all control and switchboard wiring with tinned ring tongue, solderless compression type lugs.
3. Terminal blocks shall be molded barrier type, rated 30 amperes, 600 volts, with washer head binding screws and white marking strips.
4. Make connections between hinged and stationary panels with terminal blocks and extra flexible wire having the same insulation as the panel wiring and secure wire between terminal blocks with wire cleats to prevent movement at the terminal blocks.
5. Connect all current transformer secondary leads to accessible short circuiting terminal blocks with provisions for retention of the shorting devices.
6. Provide plug-in terminal blocks for all conductors to be continued across all shipping splits.
7. Provide wire markers at each end of all control wiring conductors.

I. Nameplates
   1. Provide engraved, laminated phenolic nameplates, white letters on a black background, to identify each compartment. Two nameplates are required for each compartment, one to be mounted on the front door, the other on the rear cover. Nameplates shall be approximately 2 inch by 4 inch with 1/2 inch high lettering as indicated on the attached DRAWINGS.
   2. On door mounted devices furnish smaller engraved laminated phenolic nameplates to identify devices. Separate nameplates may be omitted where the device nameplate itself clearly indicates its function.
   3. On the rear cover of each compartment housing lightning arresters provide a 6 inches by 8 inch nameplate engraved with 3/4 inch high white letters on a red background: “DANGER - HIGH VOLTAGE LIGHTNING ARRESTERS ARE ALIVE UNLESS UTILITY LINE IS DE-ENERGIZED”.
   4. Terminal strips, fuse blocks, relays and other devices mounted behind enclosure front doors shall be identified with the wiring or device symbol on the wiring diagrams and schematics for the gear. Identification may be by symbols stenciled adjacent to the device, or by engraved nameplates.

J. Portable Breaker Lift
   1. Provide a portable breaker lift for handling a breaker during installation or during removal for inspection or maintenance.
   2. The lift is to be equipped with locking devices on the lifting forks to lock the breaker in place when being transported.

PART 3 EXECUTION

3.1 TESTING

A. Perform factory tests as necessary to demonstrate conformance with the specified requirements. Notify the ARCHITECT-ENGINEER two weeks in advance of testing to be performed so that the ARCHITECT-ENGINEER may have the option to witness testing.

B. As a minimum perform the following tests:
   1. On switchgear assembly:
      a. Power frequency dielectric tests
      b. Mechanical operation test
      c. Grounding instrument transformer case tests
      d. Electrical operation and control wiring tests
      e. Control wiring insulation test
      f. Polarity verification
      g. Sequence tests
   2. On vacuum circuit breakers:
      a. Nameplate check
      b. Control circuit and wiring check tests
      c. Mechanical operations test
      d. Timing test
      e. Conductivity of Current Path Test

f. Low frequency withstand voltage test

3.2 DELIVERY

A. Upon successful completion of tests, deliver the units to the Project Site.

3.3 INSTALLATION

A. Assemble equipment; connect; inspect; test; adjust as required; set protective relays, timers and other devices; determine that equipment operates as specified; and, certify that the switchgear is ready to be placed into service.
   1. Perform tests as specified in SECTION 16999.

B. Upon demonstration that switchgear is ready to be placed into service, place the system into service.

END OF SECTION

Revision History	
Date	**Rev. No.**
02-19-09	0

EY/ca
C:\d\timsdatasf\BROOKHAVEN_NATIONAL_LABORATORY\SF070003\200-PROJEXEC\280-SPEC\16316.doc

THIS PAGE INTENTIONALLY LEFT BLANK

SECTION 16318

MEDIUM VOLTAGE METAL ENCLOSED SWITCHGEAR

PART 1 GENERAL

1.1 SUMMARY

A. Scope
1. Provide 1 assembly of 5 KV, indoor metal enclosed, dead front, air interrupter, load break, fused disconnect switches. The switchgear appurtenances and accessories shall include, but not necessarily be limited to, the following:
a. Switch assembly, as indicated.
b. Two-position (open-close), three-pole, gang-operated, 600 amperes, load-interrupting, air-interrupter switches with stored-energy operating mechanisms.
c. Main bus, rated 600 amperes, 4.16 KV.
d. Furnish loose, all necessary splice plates, connectors, cable, bus and other hardware as required for connections between shipping sections, for installation by others.

B. Work Included
1. Receiving and unloading of the equipment upon arrival at the Project Site, including all rigging, moving within the Project Site, and installation.
2. All wiring and solderless compression type lugs external to the switches, including connections between the switches and medium voltage metal clad vacuum breaker.
3. Final assembly of shipping sections and installation in place, including electrical interconnections between shipping sections, using the splice plates, connectors, cable, hardware, etc., shipped loose.
4. Testing, adjusting, and placing of the equipment into operation.

C. Reference Specifications
1. Electrical General Provisions - SECTION 16010.
2. Basic Materials and Methods - SECTION 16050.

1.2 RELATED WORK SPECIFIED UNDER OTHER SECTIONS

1.3 QUALITY CONTROL

A. Source Quality Control
1. Construction, rating and tests. Comply with the latest requirements of ANSI, IEEE, NEMA and UL Standards.
2. Where testing has been performed on essentially identical equipment under actual Standards conditions, and test data is certified and submitted for proof, no new tests are required.
3. Power frequency withstand tests at 4.16 KV (rms) for one minute shall be made at the factory on each assembly in accordance with the requirements of ANSI Standard C37.20. Operation of all devices shall be checked before shipment.

B. Installation And Checkout

1. Provide the services of a fully qualified field engineer at the site, as may be required by the OWNER'S REPRESENTATIVE, to provide guidance during the installation of the switchgear, to check out the work of the installing contractor, and to instruct the OWNER'S REPRESENTATIVE in the care and operation of the equipment.
2. The field engineer will be required to inspect the installation, make whatever adjustments he deems necessary to assure that the switchgear is ready to be energized and put into service, and shall be authorized to sign the following statement on behalf of the Supplier:

   "The undersigned certifies that, as a responsible agent of his organization, he has inspected the equipment, and that it is ready to be placed in service.

   "The equipment has been field inspected, adjusted per the manufacturer's instruction booklets, where necessary, and complies with the approved shop drawings."

1.4 SUBMITTALS

A. Furnish submittals for items that are identified in this SECTION by a different typeface and a bracketed code (e.g., *Item [L]*). Refer to SECTION 01340 for definition of codes for types of submittals and the administrative requirements governing submittal procedure. Additional submittal requirements pertaining to this SECTION are specified herein under this Article.

B. *Shop Drawings [B,D,P]:* Submit manufacturer's certified prints showing assembly of units, outline dimensions and weights, shipping lengths, location of conduits, wiring diagrams, installation drawings and a complete bill of material, for each assembly.

C. *Test reports [T]:* Submit on all factory tests. Submit certified test reports of previous tests on essentially identical equipment under actual conditions, not simulated, for momentary test on bus, and momentary and interrupting tests on switches.

D. *Guarantee [G]* the unit to meet the operating conditions, capacity and performance conditions as specified and to remain serviceable for two years after project acceptance. If either the unit or accessories fail to meet operating requirements or if failure of any part occurs during the guarantee period, rework or replace the affected items promptly to meet the CONTRACT requirements at no cost to the OWNER.

1.5 MAINTENANCE DATA AND OPERATING INSTRUCTIONS

A. Furnish, per SECTION 01730, operating and maintenance manuals for instructions for operation and maintenance of equipment and list of recommended spare parts.

1.6 ACCESSORIES

A. Furnish one complete set, for each assembly of special tools and accessories required for the operation and maintenance of the switching equipment.

PART 2 PRODUCTS

2.1 FABRICATION AND MANUFACTURE

A. Manufacturers
   1. General Electric
   2. Siemens Energy & Automation
   3. Square D
   4. Eaton/Cutler Hammer

B. Switchgear Assemblies
   1. Each shall consist of a metal enclosed compartment containing a manually operated, air immersed, load break, disconnect switch and fuses of the number, rating and type indicated.
   2. Interrupter Switches. Load break, three pole, two position, externally gang operated, rated 5 KV (60 KV BIL), 600 amperes continuous and interrupting, 58,000 amperes momentary, mounted on NEMA rated insulators for the voltage rating and BIL specified. Equip switches with a quick-make, quick-break device to open and close the switch independently of the speed with which the operating handle is moved. Provide visual inspection through safety-glass front window and indication on the handle mechanism of the blade position.
   3. Cable Entrance Sections. From above or below as indicated. Provide adequate space for the makeup and bracing of stress relief terminations. Equip incoming line terminals with 2-hole NEMA pads and solderless compression type lugs, manufacturer's standard, for cable sizes and materials indicated. Provide bolted removable plates for access to the compartment.

C. General Features
   1. Make up all bus of high conductivity bar copper and mount on rugged insulating supports. Provide bus with continuous and short circuit current ratings equal to those of the metal enclosed switches.
   2. Bus support insulators shall be porcelain or cast cycloaliphatic plastic material. "Glastic" (glass-polyester) insulators are not acceptable.
   3. Provide a 1/4 inch x 2 inch copper ground bus the full length of the line-up. Provide lugs for 4/0 AWG copper grounding conductor at each end.
   4. Make terminal connections of all Cable Entrance Sections readily accessible from the front for making up cable connections. Silver-plate contact surfaces of all bus and connections.
   5. Switchgear Assembly Supporting Structure. Deformed, welded and bolted sheets and shapes, with rear portion containing bus bars and supports, with space for cables entering from above or below. Do not locate accessory items in the rear bus compartments. Place interrupter switches, fuses and operating mechanisms in the front portion.
   6. Finish exterior and interior surfaces of the entire assembly with a synthetic lacquer or enamel, ANSI-61 (match existing).
   7. Cubicle doors shall be equipped with rotary latch type padlockable handles. Switch shall be operable by means of a removable handle without opening a door. Handle storage provisions shall be made externally.

8. Provide station class surge arresters connected at the incoming terminations and securely grounded to the metal structure.
9. Provide nameplates with suitable engraved letters on each compartment door. Use laminated black plastic nameplates with white engraved letters.

PART 3 EXECUTION

3.1 TESTING AND DELIVERY

A. Perform factory tests on the equipment as specified. Notify the OWNER two weeks in advance of testing to be performed so that the OWNER may have the option to witness testing.

B. Upon successful completion of test, deliver the equipment to the Project Site.

3.2 INSTALLATION

A. Assemble and anchor the equipment.

B. Perform and report upon all ELECTRICAL ACCEPTANCE TESTS and adjustments required by SECTION 16999 of this SPECIFICATION.

END OF SECTION

Revision History	
Date	**Rev. No.**
A	0
B	0
C	0
02-19-09	0

EY/ca
C:\d\timsdatasf\brookhaven_national_laboratory\sf070003\200-projexec\280-spec\16010.doc

SECTION 16320

POWER TRANSFORMER

PART 1 GENERAL

1.1 DESCRIPTION

A. Design, manufacture, test and deliver to the job site 1 outdoor, self cooled, sealed type, 7500 KVA, three phase, 60 hertz, mineral oil-immersed power transformer similar to existing, including transformer mounted neutral current transformer.

B. Outdoor transformer shall be complete from incoming terminals to outgoing terminals.

C. Transformer for operation on a 13,800 volt, 3 phase, 3 wire, CG Heating low resistance grounded system to 4-160 Volt, 3 phase, 3 wire, 60 Hertz resistance grounded system.

1.2 SUBMITTALS

A. General
1. Furnish submittals for items that are identified in this SECTION by a different typeface and a bracketed code (e.g., *Item [L]*). Refer to SECTION 01340 for definition of codes for types of submittals and the administrative requirements governing submittal procedure. Additional submittal requirements pertaining to this SECTION are specified herein under this Article.

B. Bid Data
1. Submit, at the time of bidding, the following information:
a. Guaranteed no-load losses at 100 percent voltage.
b. Guaranteed losses at 100 percent voltage for both the self-cooled and supplemental load ratings of 1/4, 1/2, 3/4, and 1.
c. Exciting current at 100 percent of rated voltage in percent of full load current.
d. Impedance at neutral setting of transformer taps.
e. Description of production line impulse tests.
f. Maximum calculated sound level in decibels of the transformer.
g. Description of insulation system and maximum recommended average winding and hot-spot temperatures for operation without diminishing the normal life expectancy of the transformer.
h. Hottest spot temperatures for operation of each contact on winding temperature relay and operating tolerance.
i. Description of future cooling equipment for supplementary rating.
j. KW input to cooling equipment at each stage of cooling.
k. List manufacturer, type, rating and physical and electrical characteristics of terminal bushings.
l. Oil preservation system, ie. Sealed tank or conservator.
m. Short circuit current the transformer will be designed to withstand.
n. Description of accessory equipment, including arrestor ratings and description.

o. Description of transformer construction and material shell or core form, helical disk or layer windings.
p. Outline dimensions of assembled transformer.
q. Total assembled weight of transformer and parts.
r. Weight of transformer core and coils.
s. Weight of case.
t. Weight and number of gallons of oil.
u. Load tap changer type.

C. Manufacturer's Drawings, Reports, And Guarantee
1. *Shop Drawings [B,D,P]:* Submit manufacturer's certified prints showing assembly of units, outline dimensions and weights, shipping lengths, location of conduits, wiring diagrams, installation drawings and a complete bill of material.
2. *Test reports [T]:* Submit on all factory tests. Submit certified test reports of previous tests on essentially identical equipment under actual conditions, not simulated, for transformer temperature test.
3. *Guarantee [G]* the unit to meet the operating conditions, capacity and performance conditions as specified and to remain serviceable for two years after project acceptance. If either the unit or accessories fail to meet operating requirements or if failure of any part occurs during the guarantee period, rework or replace the affected items promptly to meet the CONTRACT requirements at no cost to the OWNER.

D. Characteristics
1. *RATINGS [P,R]*
a. Transformer. Transformer shall have one copper high voltage winding and one copper low voltage winding. The high voltage winding shall be rated at 13.8 KV delta, 7.5/8.4 MVA, self cooled, forced air cooled (future), at 65 degC rise with a BIL of 110 KV. The low voltage winding shall be rated at 4.16 KV.Y/2.4 KV, 7.5/8.4 MVA, self cooled, forced air cooled at 65 degC rise with a BIL of 60 KV. The high voltage winding shall have four 2-1/2 percent taps at rated current two above and two below 13.8 KV. The impedance from the 13.8 KV winding to the 4.16 KV winding shall be 7.0 percent on 7.5 MVA base as per ANSI Standard C57.12 within a manufacturing tolerance as per ANSI Standard C57.12.10, Table 10. The high voltage winding shall be connected DELTA and the low voltage winding shall be connected WYE.
b. Each transformer shall be designed for a future increased continuous rating of 133 percent of the self cooled rating at 65 degC temperature rise and shall include future auxiliary cooling equipment as described.
c. The transformers shall have a rating based on an average copper temperature rise of 65 degC above an ambient air temperature of 30 degC average in a 24-hour period with a maximum of 40 degC for full load continuous operation, and hotspot temperature rise of 80 degC.
2. *PHASE AND NEUTRAL TERMINALS [P]*
a. Terminals. shall be standard bushings and shall have the current carrying capacity for the increased rating of 133 percent. Primary and secondary bushings shall be top cover mounted.
b. The 13.8 KV bushings shall be 15 KV class, 110 BIL.
c. The 4.16 KV bushings shall be 5 KV class, 60 BIL.

d. The 7.62 neutral KV bushing shall be 15 KV class, 110 KV BIL.

3. *LIGHTNING ARRESTORS [U]*
   a. Lightning arrestors on the primary shall be station type 10 KV mounted adjacent to each high voltage terminal and suited for transformer protection on a 13200Y/7620 volt grounded neutral incoming service.
   b. Lightning arrestors on the secondary shall be distribution class 3 KV mounted adjacent to each low voltage terminal and suited for transformer protection on a 4160/2900 volt resistance grounded neutral outgoing service.
   c. A permanently connected 1/4 inch x 1 inch copper ground strap shall be provided from the base of each lightning arrestor to the grounding pad at the base of the transformer.
4. GROUND PADS
   a. Two 4 bolt type ground pads shall be furnished. The two pads shall be welded at an accessible location near the base of the transformer. Ground pad shall be tied to substation grounding system with 250 Kcmil bare copper ground wire.
5. SHORT CIRCUIT CAPABILITY
   a. Each transformer shall be capable of withstanding, without injury, the mechanical and thermal stresses caused by a maximum short circuit current possible in accordance with ANSI Standard C57.12.90.

1.3 QUALITY CONTROL

A. Specifications And Standards
   1. All equipment shall conform to the latest applicable standards of ANSI, IEEE, and NEMA.

B. Quality Assurance Provisions
   1. Manufacturer's Quality Assurance Program. Stipulate, with the bid, the provisions currently practiced in the plant to assure quality control.
   2. Inspection. Thoroughly inspect all the work of this specification before shipment to the site. Reject and replace any deficient work and ensure that quantities comply with requirements.
   3. All material and workmanship shall be subject to inspection and test after its delivery to the job site. In case any items of equipment are found to be defective in material or workmanship or otherwise not in conformity with the specifications, the OWNER shall have the right to reject such items or require their correction at no expense to the OWNER.
   4. The OWNER reserves the right to witness any or all standard factory tests.
   5. *Testing [T]*:
      a. Resistance measurement, ratio, polarity and phase relation excitation loss, excitation current, impulse, corona, impedance voltage and load loss, applied potential, induced potential, and temperature tests per latest ANSI C57.12.00.
      b. Do not perform transformer temperature tests where such tests have been performed on essentially identical transformer under actual conditions, not simulated, and test data is available.

1.4 MAINTENANCE DATA AND OPERATING INSTRUCTIONS

A. Furnish, per SECTION 01730, operating and maintenance manuals for instructions for operation and maintenance of equipment and list of recommended spare parts.

1.5 FIELD SERVICES

A. Furnish specialized field services to insure the correct installation and operation of the transformers. Specifically it shall be required that a field service engineer be made available to check out the transformer and its accessories during erection prior to energization, and after placing the transformer in service. Field services shall be included as part of transformer quotation price.

PART 2 PRODUCTS

2.1 MANUFACTURE

A. General Electric

B. Cooper Power Systems

C. ABB Power T&D Co.

D. Interstate Transformer

E. Sunbelt Transformer

2.2 FABRICATION

A. Configuration And Materials
   1. *RELAYS AND SAFETY DEVICES [U,T]*
      a. A pressure-vacuum bleeder relief device set to operate at maximum safe operating pressure (positive or negative) shall be furnished and mounted approximately 60 inches above foundation including support beams. An alarm contact is required.
      b. Mechanical resealing type of pressure relief device with a semaphore indicating target and alarm contact shall be furnished and mounted on the main tank cover so that the indicating target is visible from the ground.
      c. A fault sudden pressure alarm relay shall be furnished and mounted on the main tank with the “a” and “b” contact leads wired to a terminal block in the control cabinet.
      d. A top oil thermometer shall be furnished and mounted approximately 60 inches above transformer supporting surface including support beams. The thermometer will shall be located one inch below the low-oil level position and the well shall be mounted to the tank using 1/2 inch - 14 NPT coupling. The alarm contacts shall be wired to a terminal block in the control cabinet.
      e. A hotspot thermometer thermal imaging type with four independently adjustable “a” contacts, 6 inch dial with scale range of 0 to 160 degC and resettable maximum

indicating hand shall be furnished and mounted adjacent to the top-oil thermometer with the alarm contacts wired to a terminal block in the control cabinet.

f. A pressure-vacuum gauge with a scale range of 15 psi positive and 30” vacuum and mounted adjacent to the top-oil thermometer shall be furnished on sealed tank system only.

g. A 6 inch magnetic oil level gauge shall be furnished. The 25 degC oil level mark shall be at the left hand edge of the horizontal centerline of the dial face. The gauge shall have low-oil alarm contacts accessible for testing and shall be wired to a terminal block in the control cabinet.

2. BUSHINGS
   a. Where applicable, bushings shall be the interchangeable type and current rating shall be greater than the maximum 65 degC transformer nameplate current rating and shall permit transformer emergency loading.
3. CORE AND COILS
   a. Ground conductors (straps) from each core shall be clearly identified and brought to an accessible terminal on the underside of the cover near a manhole that is appropriately marked.
   b. The core to ground resistance shall be not less than 25 megohms in air as measured with a 500 volt megger.
4. *OIL PRESERVATION [D]*
   a. Equipment shall be provided to maintain a dry nitrogen atmosphere in the space above the oil. Automatic controls shall feed the gas into the transformer through a reducing valve from a steel cylinder whenever the internal pressure falls below a preset value.
   b. A means shall be provided to sample the transformer internal gas for oxygen content determination. All equipment shall be housed in a weatherproof, padlockable cabinet for mounting adjacent to the transformer.
   c. The transformers shall be shipped with core and coil under oil.
5. TANK
   a. The completely assembled transformer shall have welded on non-detachable cooling radiators and be designed to withstand without permanent deformation both 10 psig positive pressure and essentially full vacuum.
   b. Designed operating pressures shall not exceed 8 psig positive or 8 psig negative.
   c. The tank cover shall be welded.
   d. Base shall be fabricated of heavy structural steel integral with tank, with four pulling eyes, suitable for direct mounting on a concrete pad.
   e. Provide handholes and/or manholes, as required, for access to all internal connections.
   f. Provide spare handhole/manhole gaskets.
   g. Provide vent valve or plug, drain valve or plug, liquid sampling valve and filter press connection.
   h. Tank finish shall be Gray (match existing transformers). Provide one quart of touch-up paint for each transformer.
6. *CONFIGURATION [D]*
7. HANDLING FACILITIES
   a. Lifting eyes or lugs shall be provided for lifting of the cover, the core and the coil assembly from the tank, and the complete transformer.

b. Jacking pad shall be accessible for insertion of jacks when the transformer is completely assembled.
c. The base members of the transformer shall permit rolling in the directions of the center lines of both the length and width segments.

8. *LOAD TAP CHANGER [D,P]*
   a. Provide Automatic Load Tap Changing equipment with plus or minus approximately 10% regulation of the low voltage winding in sixteen approximately 5/8% steps above and below the rated low voltage.
      1) The Load Tap Changing device shall be reactance-arcing or vacuum interrupting type.
      2) The LTC switch shall be located in an oil filled compartment mounted on the transformer with removable bolted covers for access without lowering the oil in or opening the main tank. The compartment shall be furnished with a liquid level gauge, a drain/sampling valve, and a pressure relief device.
      3) The LTC motor drive mechanism shall be suitable for 120 volt single phase operation. Power source provided by installer. Provide a hand crank for manual operation in a storage place. An electrical interlock shall be furnished to prevent operation by the motor while utilizing the hand crank. Furnish electrical and mechanical stops to prevent over travel of the drive mechanism.
      4) Furnish a weather-proof, padlockable cabinet for control devices. Cabinet shall contain LTC motor control panel, automatic control panel, hand crank panel, LTC position indicator, LTC operation counter, 120 volt screw-base lamp socket with switch, 120 volt convenience outlet, and 120 volt heater with manual switch. Power source provided by installer.
      5) The transformer installation contractor will furnish a source of potential for the voltage sensing device. PT to be connected line to line (X1-X2) and shall be 0.3Y accuracy classification.
      6) Furnish current transformer(s) for supply of the line-drop compensator and for paralleling equipment.
9. *NEUTRAL GROUNDING RESISTOR [D,P]*
   a. Provide a cover mounted low-voltage neutral grounding resistor rated for 10 seconds, 400 amperes and 750 degC rise.
10. *RADIATORS, HEAT EXCHANGERS, FANS AND CONTROLS [D,P,R,T]*
   a. Provide all devices and wiring for future automatic fan cooling to increase the self cooled rating to 133%. The fans shall be suitable for operation on a single phase, 60 Hertz, 120 volt, service supplied by the OWNER. Manufacturer shall supply fuse block with fuses, or circuit breakers for overcurrent protection. Provide a contact for future remote monitoring of fan operation.

PART 3 EXECUTION

3.1 WORKMANSHIP

A. All work shall be done by craftsmen experienced in the trade and shall be performed in accordance with the best practices of the trade.

3.2 PREPARATION FOR SHIPMENT

A. The enclosure and all components shall be thoroughly cleaned before shipment. All units shall be appropriately marked.

B. All parts shall be wrapped, crated and thoroughly protected against damage and weather in transit. All frames shall have a channel spacer at the base to ensure stability of the frame. Provide covers, cushioning material, and other protection as required to protect material from damage by weather or other causes until delivery at the site.

C. Load, secure, and brace the equipment for shipment.

D. Shipping identification shall include the OWNER'S Purchase Order Number, Item Number, and Contract Number. For each Purchase Order, where more than one shipping container is used, the container number and the total number of containers shall appear in the identification.

E. Shipping:
   1. All work shall be shipped by conveyance as to best assure timely delivery.
   2. Any work damaged during delivery shall be rejected and repaired or replaced by the transformer manufacturer, at the OWNER'S discretion, at no cost to the OWNER.

END OF SECTION

Revision History	
Date	**Rev. No.**
A	0
B	0
C	0
02-19-09	0

EY/ca
C:\d\timsdatasf\brookhaven_national_laboratory\sf070003\200-projexec\280-spec\16320.doc

THIS PAGE INTENTIONALLY LEFT BLANK

SECTION 16350

ARC FLASH MITIGATION SYSTEM

PART 1 GENERAL

1.1 SUMMARY

A. Description of System

1. Provide a complete arc mitigation system suitable for attachment to switchgear and substations as indicated on the design documents for the protection of the equipment against the effects of internal arcs, to ensure personnel safety and to minimize damage and outage to the equipment. This specification covers the minimum technical requirements for the design, manufacturing, testing, supply and delivery, transportation to site, installation and commissioning of the arc mitigation system, complete in every respect with all components and necessary accessories for reliable continuous operation, even if not all details are expressively stated in this specification.
2. Operation
   a. The arc monitoring unit (arc flash detector) shall detect the occurrence of short-circuit arcing by means of arc detectors/sensors and current sensing units and immediately transmit a tripping signal to trip and lock out all relevant circuit breaks connected to the affected busbar.
   b. The arc mitigation system shall not respond to interfering light sources, electromagnetic influences, vibration and touching. Automatic or manual ombient compensation shall be provided.
   c. The protection principle of the arc mitigation system shall consist of two (2) important criteria:
      1) Dynamic rise of light intensity and overcurrent
      2) Dynamic rise of light intensity only
   d. The system shall perform the proper protection even if all outgoing feeders are supplied by one (1) incoming feeder by closing the bus tie breaker. If the internal arc occurs at any point in the bus section fed through the bus tie breaker, only the affected bus section shall be removed from service. In the case of an internal arc on the busbar section with fault current supplied from an outgoing feeder, the arc mitigation system shall perform complete busbar protection according to applicable scheme using light only without supervision of fault current detectors.
   e. The system shall be complete with control and indicating devices, and testing facilities for routine functional testing of the protection system while switchgear is energized.
   f. The arc monitoring unit with current sensing shall provide three-phase over current measurement, switchgear existing current transformers shall provide the current inputs for the current sensing unit. The current sensing unit shall block circuit breaker tripping via the arc-monitoring unit at load currents below a preset valve. Integrated circuit breaker failure protection shall be provided.
   g. Fault current supervision (fault detectors) of the optical system shall be switch selectable.

h. The system shall be capable of indicating the affected cubicle as well as selective tripping by using appropriate extension unit.

1.2 RELATED WORK SPECIFIED UNDER OTHER SECTIONS

1.3 QUALITY ASSURANCE

A. Reference Specifications and Standards
   1. All design, material, equipment required, manufacturing and testing shall be in accordance with the latest IEC, DIN, VDE, ANSI, or equivalent: unless otherwise specified in this specification.

B. Qualifications of Manufacturer
   1. Furnish essentially standard products of manufacturer regularly engaged in the production of such equipment.

C. Source Quality Control
   1. Perform and record all normal factor tests on equipment/cables.
   2. Manufacture shall have a minimum of 5 year's experience in the design, manufacturing and testing of the Arc Flash Mitigation System.
   3. The Arc Flash Mitigation System shall be U.L. recognized.

1.4 SUBMITTALS

A. Furnish submittals for items that are identified in this SECTION by a different typeface and a bracketed code (e.g., Item [L]). Refer to SECTION 01340 for definition of codes for types of submittals and the administrative requirements governing submittal procedure. Additional submittal requirements pertaining to this SECTION are specified herein under this Article.

B. Submit complete manufactures drawings of the arc mitigation system components and drawings showing placement of system components, routing of sensor cables and network communication cables in the switchgear and substation sections.

1.5 MAINTENANCE DATA AND OPERATING INSTRUCTIONS

A. Furnish, per SECTION 01730, operating and maintenance manuals covering installation, operations and servicing procedures for the equipments furnished, and complete illustrated parts breakdown with manufacturer's name, nomenclature, and part number for each component part and assembly. Include a list of recommended spare parts.

1.6 ENGINEERING FIELD SERVICE

A. Require the manufacturer of the Arc Detection System to provide a qualified engineer to check the complete installation after all equipment is installed and wired. Furnish to the OWNER the manufacturer's written certification assuring that each item of the installation is complete, in good condition, free from damage, and properly installed, connected and adjusted. Require the manufacturer's engineer to make any adjustments or replacements

which may be necessary to insure the proper functioning of the equipment furnished and to instruct the OWNER'S personnel in operation and maintenance of the equipment.

PART 2 PRODUCTS

2.1 FABRICATION AND MANUFACTURE

A. Manufacturer
   1. ABB "REA Arc Mitigation System"

B. Equipment
   1. REA Arc Mitigation System [D.P] furnish equipment providing system operation as described under Article "DESCRIPTION OF SYSTEM," as indicated on the design documents and as indicated below.
      a. Arc detection monitoring unit REA 101 (Master Unit) with integrated current sensing unit. Detects short circuit arcing and overcurrent and transmits a tripping signal to trip all relevant circuit breakers. Communicates with other REA 101 units via optolink cables for transmitting light or current tip threshold signals. Communicate with REA 105 units via a network connection cable for tripping of unit associated circuit breakers.
      b. Arc detection unit REA 105 for fast fault tripping of compartment feeder breaker upon compartment detector/sensor cable detection of arc flash or upon signal from the REA 101. Also, with one dry contact output for alarming.
      c. Detection/sensor cable shall be fiber optic light sensitive cable with a maximum length of 65 meters.
      d. Network connection cable shall be RJ-45 communication cables.
      e. Cable between REA 101's shall be optolink transmitting and receiving cables for transmitting light or current trip threshold signals.
      f. The arc mitigation system shall be designed and constructed for operation under the following conditions:
         1) Altitude: up to 1,000 meters above sea level.
         2) Ambient air temperature: -10° C (14°F) to 55° C (131°F)
         3) Relative humidity: up to 90%.

PART 3 EXECUTION

3.1 INSTALLATION

A. Install Arc Flash Mitigation System to equipment shown on the contract documents and per manufacturer's installation instructions.

END OF SECTION

Revision History	
Date	**Rev. No.**
D	0
E	0
F	0
02-19-09	0

EY/ca
C:\d\timsdatasf\BROOKHAVEN_NATIONAL_LABORATORY\SF070003\200-PROJEXEC\280-SPEC\16350.doc

SECTION 16400

DISTRIBUTION EQUIPMENT

PART 1 GENERAL

1.1 SUMMARY

A. Description of Systems
   1. Provide distribution systems as required, receptacle panels, lighting panels and install all materials and equipment, including panelboards, distribution transformers, as indicated or specified. Provide equipment supports and identification as specified. Provide touch-up painting as specified.

1.2 RELATED WORK SPECIFIED UNDER OTHER SECTIONS

1.3 SUBMITTALS

A. Furnish submittals for items that are identified in this SECTION by a different typeface and a bracketed code (e.g., *Item [L]*). Refer to SECTION 01340 for definition of codes for types of submittals and the administrative requirements governing submittal procedure. Additional submittal requirements pertaining to this SECTION are specified herein under this Article.

B. Include complete data on each item. Coordinate the items as they relate to the work, prior to submittal.

PART 2 PRODUCTS

2.1 MATERIALS

A. Panelboards For 480 Or 480Y/277 Volt Power Distribution - Circuit Breaker Type
   1. *Circuit Breaker Type General Description [B,D,P]:* Dead front type, per NEMA Standard PB 1 and UL 67, and consisting of a 3 phase, 3 wire or 4 wire solid neutral main bus with main lugs or main circuit breaker as indicated, and branch circuit breakers, all in a flush or surface mounted steel cabinet as indicated.
      a. General Electric Spectra Series
      b. Square D “I-Line”
      c. Eaton/Cutler-Hammer PRL4-B.
   2. Ratings: As indicated on the drawings.
   3. Busses: Provide copper buss only with main bus continuous current rating equal to the current rating of the main disconnecting device or main lugs. Provide (where indicated) a full size insulated neutral bus arranged for connection of incoming and outgoing neutral wines with suitable lugs for each circuit position, including spares and spaces when indicated. Provide a ground bus the full length of the panelboard for grounding of the equipment and structural frame. Furnish incoming line bus arrangement for connection of wiring entering from above or below as indicated.

4. Circuit Breakers: Bolt-in molded plastic case type, AC rated, 3 pole, quick-make, quick-break, with trip-free operating handle, position indication, common trip from thermal magnetic trip device, and minimum interrupting rating of 65,000 symmetrical amperes at 480 volts AC.
5. Enclosures: NEMA 12 unless otherwise noted, with trim covering wiring gutters only. Provide sheet metal covers over individual breakers with openings for protrusion of the operating handle and with means for padlocking the operating handle in the "off" position. Equip trim on surface mounted panels in factory areas and all flush mounted panels with an overall hinged door having a flush latch and cylinder lock. Key all locks alike or to the existing master system. Galvanize or phosphatize and prime and finish paint all surfaces in manufacturer's standard finish. Galvanize all recessed boxes.
6. Spaces: When future circuit breakers designated as "space" are noted, equip the panelboard with bus and minimum hardware ready to receive future circuit breakers. Furnish a blank removable spacer plate to cover the "space" until future use.
7. Circuit Directory: Heavy plastic covered metal frame card holder and card on individual breaker covers.
8. Lugs for Mains: Compression type; manufacturer's standard.

B. Panelboards For 480Y/277 Volt Lighting Service
1. *Lighting Service General Description [U]:* Dead front type, per NEMA Standard PB 1 and UL 67, and consisting of a 3 phase, 4 wire solid neutral main bus with main lugs or main circuit breaker as indicated, and branch circuit breakers, all in a flush, surface, or column mounting steel cabinet as indicated.
   a. General Electric AE and AEC
   b. Square D NF
   c. Siemens Energy & Automation, Inc., P2 and C2
   d. Eaton/Cutler-Hammer PRL2a and PRL2a-LX.
2. Ratings: As indicated on the panel schedules. Where the indicated combinations consist of current-limiting fuses in main or feeder fusible switches and branch breakers in series, the devices shall have been tested as combinations in accordance with UL67 Standards. All panelboards shall be the product of the same manufacturer who shall provide certification that the equipment is adequately rated for use in the indicated configurations and applications.
3. Busses: Provide copper buss only.
4. Circuit Breakers: Bolt-in molded plastic case type, AC rated, single pole, quick-make, quick-break, with trip-free operating handle, position indication, thermal magnetic trip device, and minimum interrupting rating of 65,000 RMS symmetrical amperes at 277 volts AC.
5. Enclosures: NEMA 12 unless otherwise noted, with trim having hinged door with flush latch and cylinder lock. Key all locks alike or to the existing master system. Galvanize or phosphatize and prime and finish paint in manufacturer's standard finish, including cable duct and pullbox. Galvanize all recessed boxes.
6. Spaces: When future circuit breakers designated as "space" are noted, equip the panelboard with bus and minimum hardware ready to receive future breakers. Furnish a blank removable spacer plate to cover the "space" until future use.
7. Circuit Directory: Heavy plastic covered metal frame and card on inside of door.
8. Lugs for Mains: Compression type; manufacturer's standard.

C. Panelboards For 208Y/120 Volt Lighting And Receptacle Service

1. *208/120 Volt, Lighting and Receptacle Service General Description [U]:* Dead front type, per NEMA Standard PB 1 and UL 67, and consisting of a 3 phase, 4 wire solid neutral main bus with main lugs or main circuit breaker as indicated, and branch circuit breakers, all in a flush, surface or column mounted steel cabinet as indicated.
   a. General Electric AL and ALC
   b. Square D NQOD and NQOB
   c. Siemens Energy & Automation, Inc., P1 and C2
   d. Eaton/Cutler-Hammer PRL1a and PRL1a-LX.
2. Ratings: As indicated on the panel schedules.
3. Busses: Provide copper buss only.
4. Integrated Equipment Short Circuit Ratings: Where the indicated panelboard short circuit ratings exceed the interrupting capacities of the branch breakers specified, combinations of current-limiting main breaker and branch breakers in series may be used. The combinations shall have been tested in accordance with UL67 Standards for use in the applications indicated and shall be UL-listed for such utilization.
5. Circuit Breakers: Bolt-in molded plastic case type, AC rated 1, 2, or 3 pole as indicated, quick-make, quick-break, with trip-free operating handle, position indication and thermal magnetic trip device. Furnish 2 and 3 pole breakers having a common operating handle and common trip mechanism. Furnish breakers having a minimum interrupting capacity of 10,000 symmetrical amperes at 120 volts AC for single pole breakers and at 240 volts for 2 and 3 pole breakers.
6. Enclosure: NEMA 12 unless otherwise noted, minimum 20 inch wide box except column type, and with trim having hinged door with flush latch and cylinder lock. Key all locks alike or to the existing master system. Galvanize or phosphatize and prime and finish paint in manufacturer's standard finish.
7. Spaces: When future circuit breakers designated as "space" are noted, equip the panelboard with bus and minimum hardware ready to receive future breakers. Furnish a blank removable spacer plate to cover the "space" until future use.
8. Circuit Directory: Heavy plastic covered metal frame and card on inside of door.
9. Lugs for Mains: Compression type; manufacturer's standard.

D. Distribution Transformers

1. General: All insulating materials shall be in accordance with NEMA Standard ST20 for UL component recognized insulation systems. Minimum insulations for transformers shall be 150 degC, 80 degC rise for 2 KVA and lesser ratings; 185 degC, 115 degC rise for 3 KVA through 30 KVA ratings; 220 degC, 150 degC rise for ratings greater than 30 KVA. Transformer nameplate rating shall provide full KVA capacity without the use of cooling fans.
2. *Indoor Dry Locations in General [U]:* Metal-enclosed, ventilated indoor dry, two - winding quiet type with copper windings only. Provide a minimum of two 2-1/2% full capacity above and below normal voltage taps in the primary windings, and provisions for conduit connections. Furnish transformers having voltage and KVA ratings and connections as indicated.
   a. General Electric QL
   b. Square "D"
   c. Uptegraf DFV and DFTV
   d. Eaton/Cutler-Hammer DS-3 and DT-3

E. Mini Power Center

1. Center shall be UL listed, self contained enclosure, suitable for interior or exterior use and designed for continuous operation at rated kVA, with normal life expectancy as defined in ANSI C57. Transformer KVA rating, voltages, number and ratings of circuit breakers shall be as indicated.
2. Each mini-power center shall include a main primary breaker, an encapsulated dry-type transformer, and a secondary panelboard with main breaker.
3. Transformer:
   a. Transformer shall be insulated with a 185 degrees C insulation system.
   b. All insulation materials shall be flame-retardant and shall not support combustion as defined in ASTM Standard Test Method.
   c. Transformer core shall be constructed with high-grade, nonaging, grain oriented silicon steel. The transformer core volume shall allow efficient transformer operation at 10% above the highest tap voltage
   d. The core and coil assembly shall be completely encapsulated to provide a moistureproof, shock-resistant seal. and minimize the sound level.
   e. The core of the transformer shall be grounded to the enclosure.
4. Wiring and Terminations:
   a. All interconnecting wiring between the primary main breaker and transformer, secondary main breaker and transformer, and distribution section shall be factory installed.
   b. Transformers shall be equipped with a wiring compartment suitable for conduit entry and large enough to allow convenient wiring.
5. Each mini-power center shall include a main primary breaker with an interrupting rating of 25 kA at 480 volts; and a secondary panelboard with main and secondary breakers rated 10 kA interrupting rating at 240 volts. Main breaker shall be equipped with shunt trip mechanism where indicated on the DRAWINGS. Panel shall be capable of accepting one, two or three pole common trip circuit breakers and ground fault breakers.
6. Enclosure:
   a. The enclosure shall be made of heavy-gauge steel, totally enclosed, nonventilated, NEMA 3R, with lifting eyes and the maximum temperature of the enclosure shall not exceed 90 degrees C.
   b. Main primary, secondary, and feeder breakers shall be enclosed with a padlockable hinged door.
7. Manufacturer:
   a. General Electric
   b. Square D
   c. Eaton/Cutler-Hammer

F. Fuses

1. *Fuses in General [U]:* One-time high interrupting capacity, UL Class RK5 dual element type, for motor circuits and UL Class RK1 current-limiting fuses for distribution circuits. Class H fuses are not acceptable.
   a. Bussmann “Fusetron”.
   b. Gould-Shawmut “Trionic”.
   c. Reliance Fuse “ECSR” or “ECNR”.
   d. Littelfuse “FL SLO-BLO”.

2. *Current-Limiting Fuses [U]*:
    a. Bussmann “Low-Peak”
    b. Gould-Shawmut “Amp-Trap”
    c. Reliance Fuse “LESRK” or “LENRK”.
    d. Littelfuse “LL Series”.

G. Miscellaneous
1. Decals:
    a. Meyercord “Kwickway”
    b. Panduit
    c. Seton

PART 3 EXECUTION

3.1 INSTALLATION

A. General
1. Mount panelboards at uniform heights throughout the building as indicated, and such that the distance from the floor to the center of the top switch or circuit breaker does not exceed 78 inches. Install handle locking devices on all breakers for night lighting, emergency lighting and similar circuits.

B. Equipment Supports
1. Mount all electrical equipment, not self supporting, including panelboards, starters, safety switches, and similar equipment, securely to walls, columns and machine frames with 1/4 inch minimum separation from same, and provide all necessary spacers, brackets, structural pieces, inserts, anchors and bolts for this purpose. Provide supports for truss structural pieces, inserts, anchors and bolts for this purpose. Provide supports for truss mounted and wall mounted transformers. Anchor all self-supporting equipment securely to floors and to supporting steel where such supports are indicated or required. Provide structural channels in concrete floors for support and leveling of distribution equipment as indicated or required.

C. Installation Requirements
1. Install all equipment such that sufficient working clearances are maintained per the NEC requirements.
2. After balancing loads, provide typewritten circuit directory card in panelboard directory card holder. Provide accurate identification of all circuits.
3. Install filler plates in all unused spaces.

D. Grounding
1. Provide grounding of all equipment per NEC requirements and per Specification Section 16450 “Grounding.”

E. Touch-Up Painting
   1. On all equipment installed, touch-up paint all manufacturer's standard finished equipment surfaces damaged during construction to "as new" condition with original manufacturer's finish paint.

F. Equipment Identification
   1. Provide equipment identification labels per specification SECTION 16050 - Appendix "A".
   2. Provide arc flash protection label on equipment per NEC Article110.16. Label shall be Brady Signmark #94913 3.5 inches by 5 inches or other approved.

3.2 ELECTRICAL TESTING

A. Perform electrical testing of all equipment per Specification SECTION 16999 "Electrical Acceptance Tests".

END OF SECTION

Revision History	
Date	**Rev. No.**
A	0
B	0
D	0
E	0
F	0
02-19-09	0

EY/ca
C:\d\timsdatasf\BROOKHAVEN_NATIONAL_LABORATORY\SF070003\200-PROJEXEC\280-SPEC\16400.doc

SECTION 16402

UNDERGROUND ELECTRIC SERVICE

PART 1 GENERAL

1.1 SUMMARY

A. Description of System
   1. Furnish all labor, materials, and equipment for below grade work external to buildings as required, and furnish and install all equipment and material, including underground duct banks, direct burial conduit, manholes, lighting standard foundations, and concrete work for electrical work, as indicated or specified.

B. Related Work Specified Under Other Sections
   1. Excavating, trenching, backfilling, and grading for Electrical Work - SECTION 02300.

1.2 SUBMITTALS

A. Furnish submittals for items that are identified in this SECTION by a different typeface and a bracketed code (e.g., *Item [L]*). Refer to SECTION 01340 for definition of codes for types of submittals and the administrative requirements governing submittal procedure. Additional submittal requirements pertaining to this SECTION are specified herein under this Article.

B. Include complete data on each item. Coordinate the items, as they relate to the work, prior to submittal.

PART 2 PRODUCTS

2.1 MATERIALS

A. Underground Duct - Concrete Encased
   1. Plastic Conduit: Rigid PVC conduit per NEMA Standard TC-2 Designation EPC-40-PVC standard lengths with tapered ends and matching solvent-weld type couplings.
      a. Carlon
      b. Certain Teed Corp.
      c. Condux International, Inc.
      d. The George-Ingraham Corp.
      e. Scepter Corp.
   2. Rigid Steel Conduit: SECTION 16050.

B. Direct Burial Conduit
   1. Plastic Conduit: Rigid PVC conduit per NEMA Standard TC-2, Designation EPC-40-PVC, standard lengths with tapered ends and matching solvent-weld type couplings.
      a. Carlon
      b. Condux International, Inc.
      c. The George-Ingraham Corp.
      d. Olin
      e. Triangle
   2. Rigid Steel Conduit: SECTION 16050.

C. Conduit And Fittings For Pole Risers
   1. Conduit: Rigid steel, SECTION 16050.
   2. Cable Support Fittings: Ventilating sealing bushing type for use with one or more single conductor insulated cables, cadmium or zinc-plated, malleable iron, with properly sized neoprene sealing gaskets for sealing around each insulated conductor.
      a. O-Z Electrical Mfg. Co.,Inc., Type CMT
      b. Other approved

D. Precast Manholes
   1. *Precast Type [U]:* Interlocking reinforced concrete sections having interior clear dimensions not less than indicated, designed to meet or exceed AASHTO interim specification 1972, load factor design and ACI Code 318-71 (USD) where applicable, and complete with double seals at intersections, duct openings approximately as indicated, pulling irons opposite duct faces and in center of floor, opening for ground rod, equipment mounting means, and means for securing concrete throat and manhole cover frame to the reinforcing steel in the roof of the manhole or handhole.
      a. Hartford Concrete Products, Inc., Hartford City, Indiana
      b. Penn-Cast Product, Inc.
   2. Concrete. High-early type having a minimum compressive strength of 4500 PSI.
   3. Reinforcing. Grade 60 per Bell Laboratory Specification, bonded together, and provided with strapping exposed in the manhole or handhole for connection to the grounding system.
   4. Field Waterproofing Resin:
      a. Sika Corp. “Sikadur 31”
      b. Other approved
   5. Field Waterproofing Fabric:
      a. Sika Corp. “Colma Fiberglas Mesh Fabric”
      b. Other approved

E. Frames And Covers For Electric Manholes
   1. *Manhole Frame and Cover [U]:* Gray cast iron, with machine finished contact surfaces, 30 inch diameter opening, round solid cover with the word “Electric”(field verify with Brookhaven) cast in the center of the cover in large letters.
      a. Neenah R-1640-C
      b. Other approved

2. *Square Sump Frame and Grate [U]:* Gray cast iron, with machine finished contact surfaces, 12 inch square opening, square slotted cover.
    a. Neenah R-1646
    b. Other approved
3. *Round Sump Cover [U]:* Designed to fit in bell end of standard sewer pipe of size indicated, gray cast iron, heavy duty with square openings or light duty with slotted openings.
    a. Neenah R-4030 Series or R-4040 Series, respectively
    b. Other approved
4. *Sump [U]:* Vitrified clay pipe, Type VCP-ES, extra strength, bell and spigot, of size indicated, per ASTM C 700.

F. Frames And Covers For Communication Manholes
1. *Manhole Frame and Cover [U]:* Gray cast iron, with machine finished contact surfaces, 30 inch diameter opening, round solid cover with the word "COMMUNICATION" (field verify with Brookhaven) cast in the center of the cover in large letters.
    a. Neenah R-1640-C
    b. Other approved
2. *Square Sump Frame and Grate [U]:* Gray cast iron, with machine finished contact surfaces, 12 inch square opening, square slotted cover.
    a. Neenah R-1646
    b. Other approved
3. *Round Sump Cover [U]:* Designed to fit in bell end of standard sewer pipe of size indicated, gray cast iron, heavy duty with square openings or light duty with slotted openings.
    a. Neenah R-4030 Series or R-4040 Series, respectively
    b. Other approved
4. Sump: Vitrified clay pipe, Type VCP-ES, extra strength, bell and spigot, of size indicated, per ASTM C 700.

G. Cable Racks For Electric Manholes
1. Cable Racks: Hot-dip galvanized, standard, heavy duty underground type.
    a. Line Material DU1B4
    b. Underground Devices, Inc. CR31
    c. A. B. Chance Company, 1200 Series
2. Hooks: Hot-dip galvanized, standard, heavy duty, to fit racks furnished.
    a. Line Material DU1S1 through DU1S4
    b. Underground Devices, Inc. RA10
    c. A. B. Chance Company, 1200 Series
3. Insulators: High glaze, wet process white porcelain, to fit hooks furnished.
    a. Condux International 83811-00
    b. Line Material DE3U1 and DE6U1
    c. A. B. Chance Company, 1200 Series

H. Cable Racks For Communication Manholes
1. Cable Racks: Hot-dip galvanized, standard underground communication type.
    a. Condux International 83800 Series
    b. The George-Ingraham Corp. 8737 or 8747

c. Cooper Power Systems DU17B4

2. Hooks: Hot-dip galvanized standard, to fit racks furnished.
   a. Condux International 83800 Series
   b. The George-Ingraham Corp. 8710 Series
   c. Line Material DU5S1
3. Insulators: High glaze, wet process white porcelain, to fit hooks furnished.
   a. Condux International 83811-00
   b. Line Material DE11U1
   c. A. B. Chance Company, 1100 Series

I. Miscellaneous Hardware
1. Pulling-In Irons: 7/8 inch formed steel, hot-dip galvanized.
   a. Condux International 83813-02
   b. The George-Ingraham Corp. 8220
   c. Line Material DU2T3
2. Concrete Inserts: Continuous type, cold roll formed from No. 12 gage strip steel, galvanized, length as indicated, with cardboard or styrofoam filler.
   a. Unistrut P3000 Series
   b. B-Line Systems, Inc., B32 and B52 Series
   c. “Kindorf” D900 Series

PART 3 EXECUTION

3.1 INSTALLATION

A. Underground Duct Banks - Concrete Encased
1. Form single conduit as specified into duct banks as shown and encase in concrete. Use molded plastic spacers. Lay conduit to grades indicated. Stagger joints 6 inches vertically and horizontally in horizontal duct runs and make joints watertight. Where it is necessary to cut a tapered end on duct, make cut with a tool or lathe designed to cut a taper to match the taper of the particular duct used. Provide end bells where ducts enter manholes.
2. Use rigid steel conduit in lieu of conduit specified for duct banks at risers, within 5 feet of building walls, under roads and railroads, at points of strain, and at other locations as indicated. Provide conduit adapters for connection of conduit of different materials. Extend rigid steel conduit a minimum of 5 feet beyond each edge of roads and railroads. For risers, use bends having a minimum radius of 36 inches for three inch and larger conduit, and 24 inches for conduit smaller than three inch.
3. Plug duct ends during and after construction to prevent water, mud and debris from entering duct.
4. After a duct line has been completed, pull a standard flexible mandrel not less than 12 inches long and having a diameter approximately 1/4 inch less than the inside diameter of the conduit through each conduit, and then pull a brush with stiff bristles through each conduit to make certain that no particles of earth, sand or gravel have been left in the conduit.

B. Direct Burial Conduit

1. Clear and final grade bottom of trench not less than 3 inches below the level at which conduit is to be installed. Provide a 3 inch minimum sand bed in bottom of trench preparatory to installing conduit. Install conduit as specified, with spacing as indicated, on the sand bed, and cover with a minimum of 3 inches of sand. Make conduit joints watertight. Use Type NS sand per SECTION 01640. Refer to SECTION 01640 for compaction methods and requirements.
2. Where it is necessary to cut a tapered end of duct, make cut with a tool or lathe designed to cut a taper to match the taper of the particular duct used. Provide end bells where ducts enter manholes.
3. Use rigid steel conduit in lieu of conduit specified for direct burial, at risers, within 5 feet of building walls, under roads and railroads, at points of strain, and at other locations as indicated. Extend rigid steel conduit a minimum of 5 feet beyond each edge of roads and railroads. Provide conduit adapters for connection of conduit of different materials. For risers, use bends having a minimum radius of 36 inches for three inch and larger conduit, and 24 inches for conduit smaller than 3 inch.
4. Plug ends of conduit during and after construction to prevent water, mud and debris from entering conduit. After a run has been completed, pull a brush with stiff bristles through each conduit to make certain that no particles of earth, sand or gravel have been left in the conduit.
5. Provide a concrete cover not less than 2 inches thick and of a width equal to the overall dimension of the installed conduit on top of the sand cover.
6. Provide underground hazard tape 12 inches below grade and above concrete per SECTION 16050.
7. Fill the remainder of the trench, and carefully tamp, with materials and compaction methods to suit project conditions per SECTION 01640.

C. Manholes

1. Construct manholes of cast-in-place reinforced concrete and as indicated, or provide precast manholes as indicated on the Drawings specified. Install pulling irons in cast-in-place manholes at locations indicated. In unpaved areas, install manhole frame and cover such that top of cover (rim) is 2 inches above finish grade. In paved areas, install manhole frame and cover such that top of cover (rim) is flush with finish grade. Provide waterproofing of manholes as indicated on the Drawings. Seal opening around ground rod watertight in precast manholes.
2. Rim elevations where indicated on DRAWINGS, are nominal. Contractor shall coordinate final tops of cover (rim) elevations of manholes with final grade. Manholes installed in unpaved areas shall have top of cover (rim) elevations placed at 2 inches above final grade.
3. In “Electric” manholes, install concrete inserts as required and not less than 2 cable racks on each wall with additional racks as indicated and required for proper support of cables. Equip racks with hooks and insulators as required for cable support. Install one spare hook of the maximum size used on each rack. Do not provide insulators on spare hooks. Provide grounding as indicated, and ground all steel and equipment.
4. In “Communication” manholes, install concrete inserts as required and 2 cable racks on each wall. Equip racks with 2 hooks and one insulator on each hook. Provide grounding as indicated and ground all steel and equipment.

D. Lighting Standard Foundations
   1. Construct foundations of reinforced concrete and as indicated, complete with anchors, conduit and grounding. Anchors are specified in SECTION 16500.

E. Concrete Work For Electrical Work
   1. Provide concrete work including concrete, forming, pouring and reinforcing for underground duct banks, protection of direct burial conduit, equipment foundations at grade, risers, and lighting standard foundations. Provide concrete, forming, pouring and reinforcing in conformance with requirements of SECTION 03300, except as otherwise specified. Use concrete having a minimum compressive strength of 3000 psi in 28 days, unless otherwise indicated. Use air-entrained concrete for applications exposed to the weather.

F. Waterproofing Of Manholes And Handholes
   1. Precast Manholes. Waterproof section joints, duct entrances, and joints at top and bottom of poured concrete throats as indicated on Drawing E-503.

END OF SECTION

Revision History	
Date	**Rev. No.**
A	0
B	0
D	0
E	0
F	0
02-19-09	0

EY/ca
C:\d\timsdatasf\BROOKHAVEN_NATIONAL_LABORATORY\SF070003\200-PROJEXEC\280-SPEC\16402.doc

SECTION 16450

GROUNDING

PART 1 GENERAL

1.1 SUMMARY

A. Description Of Systems
   1. Provide grounding system as indicated or specified.
   2. Grounding Conductors:
      a. For General Use Above and Below Grade: Bare.
      b. For General Use Below Grade: Bare.
      c. In Ducts in Duct Banks: Insulated.
      d. In Conduit with Phase Conductors: Insulated.
      e. For Isolated Grounding Systems: Insulated.
   3. Grounding Connections:
      a. In Earth or Inaccessible Locations. Exothermic welded type.
      b. To Structural Steel Used for Main Building Framing. Exothermic welded type.
      c. To Non-Permanently Fixed Equipment. Lugs bolted to the equipment.

1.2 QUALITY ASSURANCE

A. Requirements Of Regulatory Agencies
   1. Ground electrical system neutrals and noncurrent carrying parts of electrical equipment per the requirements of the National Electrical Code, except where additional requirements are indicated or specified.

1.3 SUBMITTALS

A. Furnish submittals for items that are identified in this SECTION by a different typeface and a bracketed code (e.g., *Item [L]*). Refer to SECTION 01340 for definition of codes for types of submittals and the administrative requirements governing submittal procedure. Additional submittal requirements pertaining to this SECTION are specified herein under this Article.

B. Include complete data on each item. Coordinate the items, as they relate to the work, prior to submittal.

PART 2 PRODUCTS

2.1 GROUND RODS

A. Ground Rods: Copperweld or copper-clad steel, 3/4 inch in diameter, 10 foot minimum installed length for individual rod installation.
   1. Blackburn
   2. Joslyn

2.2 GROUNDING CONDUCTORS

A. Bare Grounding Conductors: stranded annealed copper.

B. Insulated Grounding Conductors: stranded annealed copper insulated with a heat and moisture resistant polyvinyl chloride compound and meeting UL Requirements for Type [THWN] [or] [XHHW], 75 degC, rated 600 volts, color-coded green. Conductor No. 10 AWG and smaller may be solid in lieu of stranded. Refer to SECTION 16120 for manufacturers.

2.3 GROUNDING CONNECTIONS

A. Exothermic Welding Connection Materials:
   1. Erico Products “Cadweld”

B. Copper Compression Grounding:
   1. Anderson
   2. Burndy
   3. Ilsco
   4. Panduit
   5. Penn Union
   6. Thomas & Betts

C. Grounding Fittings for Connecting to Water Pipe:
   1. Burndy GD or GG
   2. Thomas & Betts Series 2818 to 3821, 3824 and 3890
   3. Anderson Type GC

D. Grounding Fittings for Bonding a Ground Conductor to Its Own Conduit:
   1. Appleton Type GIB
   2. Burndy NE
   3. Penn Union BD
   4. O-Z Type GB
   5. Thomas & Betts Type TIG or 3800 Series

E. Grounding Fittings for Connection of Grounding Conductor to Fencing:
   1. Burndy GL or GD
   2. Penn Union GU or GH
   3. Anderson GC-110 or GC-143

F. Other Grounding Connectors and Lugs: Compression type as specified in SECTION 16120.

2.4 MARKERS AND IDENTIFIERS

A. Underground Hazard Tape. Non-adhesive, vinyl or polyester, 3-inch wide, black letters on yellow background “CAUTION-BURIED GROUND WIRE”.
   1. Panduit
   2. Stranco Products, Inc.
   3. Thomas & Betts

PART 3 EXECUTION

3.1 INSTALLATION

A. Install conductors of size required by the NEC, except that where larger sizes are indicated, provide these sizes. Install ground rods at locations indicated, and where shown in multiple, separate rods by at least 10 feet. Locate top of rod not less than 12 inches below finish grade. Ground structural steel building framing by making connections in the web of the columns.

B. Thoroughly clean all bonding surfaces of non-conducting materials. Where bolted connections are used, treat surfaces with a corrosion-inhibiting compound.

C. Where insulated conductors are used, thoroughly tape all exposed splices and connections. Encapsulate below grade splices and connections so that bare conductors are not in contact with earth.

D. Where metallic conduit is used for mechanical protection of a ground conductor, bond conductor to the conduit at each end.

E. For electrical system neutral grounding, do not use conductor sizes smaller than No. 8 AWG.

F. Ground the enclosures of all heavy duty equipment, such as switchgear, substations, transformers, motor control centers, and motors above 50 horsepower, with a separate grounding conductor connected to the nearest ground electrode conductor or ground bus comprising a part of the electrical system grounding. Provide equipment grounding conductors in electrical substation room floor slabs. Coordinate locations for terminations on equipment before concrete is poured.

G. Any cable passing through the lowest floor or foundation walls below grade shall be sealed by exothermic weld or solder dipping, embedded in the wall or floor, to prevent water seepage through the interstices of the cable.

H. Where non-metallic conduit is used, install an equipment grounding conductor in the conduit with the circuit conductors. The grounding conductor may be a separate conductor, a conductor of a multi-conductor cable, or wires in the interstices of cabled circuit conductors. Size the grounding conductors per NEC requirements except where noted otherwise.

I. Lighting branch circuits in EMT or flexible conduit and lighting fixture cord and plug assemblies shall have an equipment grounding conductor.

J. Provide an equipment grounding conductor, within the raceway along with phase conductors, for all feeders and branch circuits.

K. Provide an equipment grounding conductor within all flexible conduits.

L. An equipment grounding conductor shall be installed within the raceway along with the phase conductors for all electrical equipment and devices located in Health Care Facilities, Clinics and Medical Areas.

M. The metallic enclosures and exposed noncurrent-carrying metal parts of all electrical equipment shall be grounded by connection with an equipment grounding conductor. This includes boxes, panels, lighting fixtures, ballasts and poles, receptacles, etc.

N. Lighting poles and luminaries shall be grounded with a #6 bare, stranded copper cable exothermically welded to a ground rod adjacent to the pole. An equipment grounding conductor shall be installed with the phase conductors.

O. In manholes, install grounding as indicated, and ground all steel and equipment. Minimum size bare copper conductor is #4/0. Cadweld all connections.

P. Install hazard warning tape 12 inches below grade at locations of all underground grounding cables.

END OF SECTION

Revision History	
Date	**Rev. No.**
A	0
B	0
D	0
E	0
F	0
02-19-09	0

EY/ca
C:\d\timsdatasf\BROOKHAVEN_NATIONAL_LABORATORY\SF070003\200-PROJEXEC\280-SPEC\16450.doc

SECTION 16500

LIGHTING SYSTEMS

PART 1 GENERAL

1.1 SUMMARY

A. Description Of Systems
1. Provide lighting systems as required, and all materials and equipment, including lighting fixtures, accessories and associated systems and equipment, as indicated or specified.

B. Related Work Specified Under Other Sections
1. Ceiling Materials - 09000 Series SECTIONS.
2. Painting of Lighting Poles - SECTION 09900.
3. Temporary Lighting - SECTION 01510.

1.2 QUALITY ASSURANCE

A. Requirements Of Regulatory Agencies
1. Furnish lighting fixtures and other equipment, including all modifications thereto and component electrical parts, listed by Underwriters' Laboratories as meeting National Electrical Code requirements, National Appliance Energy Conservation Act of 1987; Amendments of 1988 (Public Law 100.357 dated June 28, 1988) requirements for energy-efficient ballast, Energy Policy Act of 1992 requirements for lamp efficiency standards, also bearing the UL and energy-efficient labels where such service is available for equipment specified.
2. All lighting fixtures using metal halide lamps shall have a tempered glass barrier between the lamp and the bottom of the fixture to contain and prevent hot glass particles and hot quartz particles from falling out of the fixture in the event of breakage of the outer glass bulb and the quartz arc tube. The glass barrier shall also prevent any ultra-violet radiation from leaving the fixture. Any manufacturer proposing to use any material other than glass shall submit test results proving the material can prevent hot glass and hot quartz from burning thru the material and falling out of the fixture and prevent any ultra-violet radiation from leaving the fixture.
3. All H.I.D. fixtures shall be enclosed.

B. Source Quality Control
1. Fluorescent Lenses. Prismatic lenses on recessed fluorescent fixtures shall be acrylic and shall not be less than 0.125 inches in overall thickness.

1.3 SUBMITTALS

A. Furnish submittals for items that are identified in this SECTION by a different typeface and a bracketed code (e.g., *Item [L]*). Refer to SECTION 01340 for definition of codes for types of submittals and the administrative requirements governing submittal procedure. Additional submittal requirements pertaining to this SECTION are specified herein under this Article.

B. Submit product data for each type of lighting fixture, equipment, and accessory, identify each item by fixture specification type number, manufacturer catalog number, ballast type and manufacturer, coefficients of utilization and sufficient detailed information to allow the ARCHITECT-ENGINEER to accurately evaluate the products.

PART 2 PRODUCTS

2.1 MATERIALS

A. Ballasts

1. *Fluorescent Electronic [U]*: Unless otherwise indicated in lighting fixture specification or schedule, ballasts shall be high-frequency, full light-output-type for use on programmed rapid start (T-8) lamps and compatible for use with energy saving lamps. All ballasts for each fixture type shall be of the same type and shall be the product of one manufacturer.
   a. Furnish commercial and recessed fixtures with ballasts having a NEMA “A” sound rating or better.
   b. Individually fused with Bussman type GLP fuses in HLP holders. Except in recessed fixtures, fuses shall be accessible from outside the fixture chassis. Use fuse rating as recommended by fixture manufacturer.
   c. Shall be UL Listed, ETL certified, Class “P” high power factor (minimum .95 or better).
   d. Shall have less than 20 percent total harmonic distortion and minimum ballast factor of .85 percent.
   e. Shall withstand voltage transients as defined in ANSI/IEEE C62.41 Category B. Medium Exposure, 4000 volts.
   f. Electromagnetic interference shall not be greater than allowed by the FCC Rules and Regulations, Part 15 Subpart J, Part 18 for RF lighting devices.
   g. Shall provide lamp current crest factor less than 1.5 and normal rated life for the lamp specified.
   h. Shall have a 3 year warranty including 10 dollar labor allowance.
   i. Approved manufacturers. The following manufacturers are approved for use on programmed rapid start T-8 lamps. No substitutions permitted.
      1) Advance “
      2) Osrom Sylvania “Quicktronic”
      3) Motorola “Motorola”
      4) Universal Lighting Technologies “Triad”.
2. Compact Fluorescent Electronic[U]: *ETL certified, full light output type, regulating electronic high power factor, compatible for use with energy-saving lamps.*
   a. Furnish commercial and recessed fixtures with ballasts having a NEMA sound rating of “A” or better.
   b. Individually fused with Bussman Type GLP fuses in HLP holders. Use fuse rating as recommended by fixture manufacturer.
      1) Advance
      2) Universal Lighting Technologies
3. *High Pressure Sodium [U]*: High power factor, non-PCB, lead-peak auto-transformer (CWA) type with starting current not exceeding the operating current. Individually fuse

all ungrounded legs of ballasts. Use fuse ratings as recommended by manufacturer. Use ballasts rated for operation in 55 degC ambient temperature for fixtures mounted indoors, except where otherwise specified in the fixture specification or schedule. Use ballasts rated for reliable starting down to minus 20 degF for fixtures mounted outdoors.

a. Advance
b. Powerlighting Products, Inc.
c. Magnetic/Universal

4. *High Pressure Sodium-Premium (for 250 and 400 watt lamps only) [U]*: Minimum 90 percent power factor, non-PCB, regulated, lag type Constant Wattage (CW), starting current not exceeding the operating current, isolated copper windings, capacitor connected in tertiary winding, ambient temperatures from minus 40 degC to plus 55 degC, lamp operation within ANSI trapezoidal limits, lamp crest factor not to exceed 1.8, lamp wattage spread shall not exceed 18 percent appreciable loss of ballast or starting device life, all at nominal line voltage plus or minus 10 percent and any lamp voltage throughout rated lamp life. Submit volt-watt traces. Individually fuse all ungrounded legs of ballasts. Use fuse ratings as recommended by manufacturer.
   a. Advance
   b. General Electric “Magnetic-Regulator”
   c. Hubbell “Electro-Reg 2”
   d. Universal Lighting Technologies

B. Lamps
1. Incandescent: 130 volts extended service, 2500 hours rated life, inside frosted, except where otherwise indicated or specified in the fixture specification or schedule. Provide sizes as indicated or specified in the fixture specification or schedule.
   a. General Electric
   b. North American Philips
   c. Osram Sylvania
2. Fluorescent: Type F-4100 K, unless otherwise indicated or specified in the fixture specification or schedule.
   a. General Electric “SP” Series
   b. North American Philips “SPEC” Series
   c. Osram Sylvania “DESIGNER” Series
3. Compact Fluorescent . As specified in the fixture specification or schedule.
   a. General electric “BIAX” series.
   b. North American Philips “PL” Series.
   c. Osram Sylvania.
4. *High Pressure Sodium [U]*: ANSI Code as specified in the fixture specification or schedule.
   a. General Electric
   b. North American Philips
   c. Osram Sylvania

C. Fixture Schedules
1. *FIXTURE TYPES [P]*:
   a. Provide as indicated on DRAWINGS.

D. Industrial Fixture Hanger
   1. *Combination Threaded Cast Box or Conduit Body Conduit Stem, Fixture Stud and Self-Aligning Hanger [U]*:
      a. Appleton Hanger. Type UNJ
      b. Other approved

PART 3 EXECUTION

3.1 INSTALLATION

A. Supports
   1. Provide supports for all lighting fixtures as detailed, as specified or as otherwise required by the fixture specified. Support single units from fixture studs in outlet boxes. For continuous row fluorescent type, provide a support for each end plus at least one for each channel section, or as required. Swivel mount all stems. Provide concrete inserts at points of fixture support in unfinished areas where a concrete slab serves as the ceiling. In finished areas, provide supports independent of the acoustic tile or plaster; support fixtures from the ceiling support system, or from the concrete floor or roof steel above the ceiling.
   2. Provide supports for recessed fixtures as recommended by the fixture manufacturer or as specified. Furnish plaster frames for all recessed fixtures mounted in plaster ceilings. Coordinate fixture mounting with type of ceilings specified. Verify ceiling support systems and coordinate fixture installation. Fasten “lay-in” fixtures to the ceiling grid.
   3. For industrial fixtures suspended from ceiling outlet boxes, provide 1/2 inch rigid combination conduit stems, fixture stud, and self-aligning hangers. In other locations, except as otherwise detailed or required, provide ceiling or wall outlet boxes with 3/8 inch, no-bolt fixture studs. Provide special hangers for support of any fixture which weighs more than 50 pounds.
   4. For chain hung industrial fixtures, provide a six foot three conductor cord with twist lock plug and six foot chains.
   5. All cable splices in pole bases shall be bolted connector and sealed watertight.

END OF SECTION

Revision History	
Date	**Rev. No.**
A	0
B	0
D	0
E	0
F	0
02-19-09	0

EY/ca
C:\d\timsdatasf\BROOKHAVEN_NATIONAL_LABORATORY\SF070003\200-PROJEXEC\280-SPEC\16500.doc

SECTION 16611

UNINTERRUPTIBLE POWER SUPPLY BATTERY-INVERTER, AUTO-BYPASS

PART 1 GENERAL

1.1 SUMMARY

A. Description Of System

1. Provide a completely integrated static uninterruptible AC power system (UPS) of the static switching bypass type. System shall provide regulated and transient-free 120/208 volt, 3-phase, 4 wire, 60 hertz power to the Emergency Power Receptacle Panel from the unregulated AC power line under normal and abnormal conditions, including complete failure of the unregulated AC power line for a period of not less than 5 minutes, with automatic bypass of UPS equipment in the event of failure of the UPS equipment, all without objectionable disturbance or loss of AC service to the computer room. System shall consist of a static inverter, rectifier charger, static bypass switch and storage battery. Provide equipment having a KVA output rating not less than that indicated.
2. Operation. As follows for specified conditions.
   a. Normal Unregulated AC Power Applied to UPS. Automatically supply the load through the inverter and rectifier charger directly, maintaining battery in fully charged “float” condition.
   b. Abnormal Unregulated AC Power Applied to UPS. Automatically supply the load continuously with regulated power through the inverter combining the unregulated AC power source and the battery source.
   c. Absence or Extreme Abnormality of Unregulated, AC Power Applied to UPS. Automatically supply the load from regulated power through the inverter from the battery source only for the limited period specified.
   d. Return to Normal Unregulated AC Power Applied to UPS after Failure or Extreme Abnormality of Unregulated AC Power. Supply the load through the inverter and rectifier charger directly while recharging the battery.
   e. Abnormal Output From or Loss of Rectifier Charger, Battery or Inverter. Automatically isolate and bypass the UPS equipment and supply the load from the unregulated AC power source by means of the static bypass switch.
   f. Return to Normal Unregulated AC Power Applied to UPS After Restoration of UPS Equipment. Synchronize inverter output with unregulated AC power source and serve the load from the unregulated AC power source through the UPS equipment and isolate bypass circuit by means of the static bypass switch.
   g. Overload or Short Circuit Beyond the Load Terminals of the UPS Equipment. Automatically isolate and bypass the UPS equipment and supply the load from the unregulated AC power source by means of the static bypass switch until the overload or short circuit is cleared at the Computer Room Power Panel. Return to normal operation as specified in paragraph above.
   h. High efficiency power management software package for remote monitoring over a 10/100 network and Intranet and 2 dry contacts for event monitoring. Overall system shall be in conformance with UL924.

1.2 RELATED WORK SPECIFIED UNDER OTHER SECTIONS

1.3 QUALITY ASSURANCE

A. Reference Specifications And Standards
   1. Furnish equipment meeting all applicable requirements of NEMA and IEEE Inverter Standards and the NEC.
      a. ANSI C62.41 (IEEE 587)
      b. FCC rules Part 15, Class A
      c. National Electrical Code (NFPA 70)
      d. OSHA
      e. UL Standard 1778
   2. The UPS shall be UL listed per UL Standard 1778.
   3. The UPS shall be tested to ANSI 62.41 Categories A & B with no damage incurred.

B. Qualifications Of Manufacturers
   1. Furnish essentially standard products of manufacturers regularly engaged in the production of such equipment.

C. Source Quality Control
   1. Perform and record all normal factory tests on subassemblies and total assembly.
   2. Manufacturer shall have a minimum of 5 year's experience in the design, manufacture, and testing of solid-state UPS systems and shall be ISO9001 certified.

1.4 SUBMITTALS

A. Furnish submittals for items that are identified in this SECTION by a different typeface and a bracketed code (e.g., *Item [L]*). Refer to SECTION 01340 for definition of codes for types of submittals and the administrative requirements governing submittal procedure. Additional submittal requirements pertaining to this SECTION are specified herein under this Article.

B. Submit complete manufacturers drawings of the proposed UPS equipment showing assembly of units, outline dimensions and weights, shipping lengths, location of conduits and ground lugs, interconnection diagram for external cabling and internal wiring diagrams of equipment.

1.5 MAINTENANCE DATA AND OPERATING INSTRUCTIONS

A. Furnish, per SECTION 01730, operating and maintenance manuals covering installation, operation and servicing procedures for the equipments furnished, and complete illustrated parts breakdown with manufacturer's name, nomenclature, and part number for each component part and assembly. Include a list of recommended spare parts.

1.6 ENGINEERING FIELD SERVICE

A. Require the manufacturer of the UPS equipment to provide a qualified engineer to check the complete equipments after all equipment is installed and wired. Furnish to the OWNER the manufacturer's written certification assuring that each item of equipment is complete, in good condition, free from damage, and properly installed, connected and adjusted. Require the

manufacturer's engineer to make any adjustments or replacements which may be necessary to insure the proper functioning of the equipment furnished and to instruct the OWNER'S personnel in operation and maintenance of the equipment.

PART 2 PRODUCTS

2.1 FABRICATION AND MANUFACTURE

A. Manufacturers
   1. Cyberex Inc.
   2. Emergency Power Engineering
   3. Emerson Electric
   4. Liebert Corp.

B. Equipment
   1. *UPS Equipment [D,P]:* Furnish equipment providing the operation as described under Article "DESCRIPTION OF SYSTEM" and having the following electrical characteristics when used with an unregulated AC power source rated 120/208 volts, 3 phase, 4 wire, 60 hertz.
      a. Output Power Rating. Rated for full power output when installed in an ambient temperature range of 0 degC to 40 degC, and capable of operation in a 50 degC ambient at not less than 80% of rated power output.
      b. Output Voltage Stability. Output voltage stable within plus or minus 1% for any one of the following listed conditions, and within plus or minus 2% for any combination of the following listed conditions.
         1) Increasing load from no-load to full load at 1.0 to 0.7 PF.
         2) Varying AC input voltage within plus or minus 10% of rated voltage and varying input frequency within plus or minus 5% of rated frequency.
         3) Operating above a 40 degC ambient.
         4) Varying battery voltage from fully discharged value to maximum recharge value.
      c. Output Voltage Adjustment. Adjustable within plus or minus 5% of rated voltage.
      d. Transient Response of Output Voltage After 100% Load Application and Removal. Plus or minus 5% within 8 milliseconds with maximum deviation of 10%.
      e. Output Voltage Unbalance with 100% Load Unbalance. 4% maximum line to neutral.
      f. Output frequency stable within plus or minus 0.5% of rated value in any ambient temperature between 0 degC and 50 degC when not synchronized to the AC line.
      g. Output frequency adjustable within plus or minus 2 hertz of rated frequency.
      h. Output Phase Separation. Within plus or minus 5% with 20% load unbalance.
      i. Output Harmonic Distortion. Not exceeding plus or minus 3% for any single harmonic and not exceeding plus or minus 5% total at the fundamental frequency of 60 hertz +/- 2-1/2% at rated nominal output voltage plus or minus 10%; from 10% to full load at 0.7 to 1.0 PF and over battery voltage range.
      j. Minimum Output Capacity. (a) 150% of unity PF rating for 30 seconds minimum at essentially full voltage and (b) 800% of unity PF rating for 0.01 second minimum at essentially full voltage.

k. Overall Efficiency. 75% minimum at full load when operating from the unregulated AC power line.
l. Automatic Synchronization. Hold phase of inverter voltage within plus or minus 5% of unregulated AC power source; however, if the unregulated AC power source frequency deviates beyond plus 0.6 to minus 0.5 hertz of nominal, revert to inverter internal reference frequency, automatically, and when the unregulated AC power source returns to nominal frequency, resynchronize inverter to the unregulated AC power source nominal frequency. Maximum rate of change of inverter frequency. 1 hertz per second.
m. AC Output Current Limiting. Automatically protect the inverter against damage due to excess overloads, or short circuit current in excess of 150% of unity PF rated current by bypass operation and automatically return to normal operation on removal of abnormal load.
n. Discontinuity of Power Upon Loss of Inverter Output or Restoration of Normal Operation. Maximum disturbance less than 1/4 cycle.
o. Battery Recharge Time After Loss of Unregulated AC Power Source for the Rated Protection Period. 24 times protection period maximum.
p. Load Switching. Capable of switching any loads within overload rating or starting into any load without improper operation.

2. Storage Battery. Lead acid calcium stationary type complete with open type steel rack, intercell connectors, necessary maintenance accessories, and electrolyte.
3. Adjustments. Provide means of adjusting the following parameters:
   a. Frequency.
   b. AC current limit.
   c. AC output voltage.
   d. Static switch transfer levels for transient and steady state undervoltage. Factory set steady state overvoltage level.
   e. Static switch return to normal level.
   f. DC float voltage.
   g. DC equalize voltage.
   h. DC current limit.
4. Testing Provisions. Provide means for testing the inverter control equipment independent of the power equipment without disconnecting or removing the equipment from the inverter. Provide test points as required for proper adjustment and servicing of the control. Provide means for testing the system, including static switch, under dummy load while the load is bypassed to the unregulated AC power source.
5. Overcurrent Protection. Provide integral overcurrent protection to prevent damage to UPS equipment including the following:
   a. Circuit breaker or fuses on AC input to charger and to static switch, on DC output of charger, and on DC input and AC output of inverter.
   b. Current-limiting fuses on all power SCR units.
   c. Fuses on input capacitors in parallel banks.
6. Operator Controls. Provide the following controls readily accessible on the front of the unit, as a minimum.
   a. Charger “On-Off”.
   b. Inverter “On-Charge-Off”.
   c. Static switch “Transfer Test” switch.
   d. Static switch “Manual Return to Inverter” switch.

e. “Manual Bypass to Unregulated AC Power Source” with isolation of system including synchronization signal (no break transfer).

7. Instrumentation. Provide the following controls and meters (2% accuracy as a minimum).
   a. AC voltmeter on unregulated AC power input with selector switch.
   b. AC voltmeter on inverter output with selector switch.
   c. AC ammeter on inverter output with selector switch.
   d. Frequency meter on inverter output.
   e. DC voltmeter on battery input to UPS equipment.
   f. DC ammeter on charger output.
8. Indicating and Alarm Lights and Provisions for Remote Alarm. Provide the following indication, and alarm contacts rated 2 amperes, 120 volts AC.
   a. “Synchronization Monitor” light.
   b. “Low Battery Voltage” alarm light and alarm contacts.
   c. Alarm and indicating lights as required for “Static Switch Position” and alarm contacts.
   d. “Battery Operation” light and alarm contacts.
9. Enclosures. House all UPS equipment in one or more free standing panels constructed of smooth sheet steel welded together with structural members to provide a rigid self-supporting panel or section. Round all corners, and equip the front of each panel with a hinge door or doors for access to all equipment and wiring. Equip door with a latch and cylinder lock. Prime and finish paint all exterior and interior surfaces with manufacturer’s standard baked enamel finish. Bolt adjacent panels together in suitable shipping lengths to fit through a 3 foot by 6 foot hatch. Provide a grounding lug in the assembly. Provide NEMA 1 enclosure with gaskets and permanent type filters over all ventilation openings. Where cooling fans are required for proper operation, provide redundant systems, individually protected.

PART 3 EXECUTION

3.1 INSTALLATION

A. Install the equipment at locations indicated and anchor securely to the concrete pads. Provide all power control and grounding connections.

END OF SECTION

Revision History	
Date	**Rev. No.**
A	0
B	0
D	0
E	0
F	0
02-19-09	0

EY/ca
C:\d\timsdatasf\BROOKHAVEN_NATIONAL_LABORATORY\SF070003\200-PROJEXEC\280-SPEC\16611.doc

SECTION 16721

FIRE ALARM SYSTEM

PART 1 GENERAL

1.1 DESCRIPTION

A. Furnish all labor, material and accessories necessary to extend, furnish and install a complete fire alarm system. The system shall be addressable, multiplexed, zoned, electrically supervised, have closed circuits and left in first class operating condition. The equipment and complete installation shall be in compliance with local and national codes and the authorities having jurisdiction.

B. The following is intended to describe the minimum functional requirements for a multiplex, integrated, proprietary, monitor and control system.

1.2 SYSTEM DESCRIPTION

A. The work includes the system equipment specified, installation, wiring, testing and commissioning. The initial installation shall include all memory and software, pushbuttons, switches, indicating lamps, and electronic hardware for a completely operable system per these specifications.

B. The system shall utilize distributed processing techniques, be totally solid state except for control panel relay associated outputs, microprocessor based and use digital transmission techniques.

C. The system shall be UL listed, reference NFPA 72, 90A, 101 and ADA for fire alarm and UL 1076 for security. All equipment shall be UL listed for the purpose intended and labeled under product category code UOJZ as an integrated control unit system.

D. The system communication format shall provide for priorities of different types of alarms such that, fire alarm points shall have the highest priority, with other designated types of alarms, such as security, having a second level and other types, such as guard patrol, having a third level of priority assigned which do not require operator involvement. Additionally, control points shall be assigned priorities to guarantee operation as required during emergency conditions.

E. The system shall be modular in design to allow future expansion with a minimum of hardware additions. The system shall be equipped with battery standby and charging circuits for system operation during commercial power outages. When the system is operating on a battery supply, either the control panel or any transponder, a trouble condition shall be generated at the control panel. When commercial power is restored, the system shall revert back to the 120V, 60Hz without any manual restart procedures. The control panel and all transponders shall be equipped with a minimum of 24 hours of battery standby and 15 minutes of alarm

power. The control panel shall be equipped with battery charging circuits sufficient to recharge fully depleted batteries within 70 percent of their maximum capacity within 12 hours.

F. System connections for alarm-initiating and alarm-indicating circuits:
   1. Initiating Device Loops-Class “A” (Addressable).
   2. Signaling Line Circuits-Class “B”. (Speakers).
   3. Notification Appliance Circuits (strobe lights)-Class “B”.
   4. Head-end CPU to Transponders Data Communication Loop – Class “A”.

1.3 RELATED WORK SPECIFIED IN OTHER SECTIONS

A. Basic Materials and methods, SECTION - 16050.

B. Wire and cable (600 volts and less), SECTION - 16120.

C. Fire Protection System - SECTION 15300.

1.4 SOURCE QUALITY CONTROL

A. Furnish equipment and materials listed in the current, latest issue having a date prior to issue date of SPECIFICATIONS, of Equipment Publications and Underwriters’ Laboratories, Inc., bearing the UL Label and wherever standards have been established by NFPA, IEEE, ASTM, ANSI, ICEA and NEMA for equipment referenced to such standards in this document. Furnish equipment and materials conforming to the requirements of the National Electrical Code and the requirements of the Contract Documents.

1.5 FIELD QUALITY CONTROL

A. Install equipment and material in compliance with the regulations of Local, State and Governmental laws governing electrical installations, the latest edition of the National Electrical Code and the requirements of the CONTRACT DOCUMENTS.

1.6 QUALITY ASSURANCE

A. All tradesmen shall review the specifications herein with particular attention paid to the related sections. **CLOSE COORDINATION IS ESSENTIAL TO THIS PROJECT!**

B. Completely review all functions and layout of fire alarm and control unit components prior to permitting installation.

C. Bench test all components prior to installation.

D. Provide factory-trained personnel to conduct final site inspection, testing, start-up and programming.

1.7 CERTIFICATION

A. Submit to the office of the local authority having jurisdiction all documents required for review. Manufacturer must be licensed by the State of New York to supervise and certify life

safety systems. Submit certified duplicate copies of state submittals, correspondence and acceptance to OWNER's REPRESENTATIVE.

1.8 EQUIPMENT SUPPLIER QUALIFICATIONS

A. The supplier of the system shall maintain permanent service facilities in the area of the installation. The facilities shall include a permanent source of factory trained service technicians on 24 hour call experienced in servicing this type of equipment and shall provide warranty and routine maintenance service to afford the OWNER maximum coverage. He shall also provide a central source of support to guarantee immediate answers to the OWNER's problems resulting from malfunctioning and/or misunderstanding of the operation of the equipment.

1.9 EQUIPMENT INSTALLER QUALIFICATIONS

A. The installation of the system shall be performed by fully qualified personnel having had experience on the installation of this type of system and able to certify that they have had no less than five years of continuous experience in this area and have made installations similar to this and of this size or larger.

B. CONTRACTOR shall install the system under the supervision of the manufacturer and test the system in the presence of the OWNER. CONTRACTOR shall submit all test reports to the OWNER.

1.10 WIRING

A. All wiring shall be in accordance with the manufacturers recommendation. All wiring must be installed in conduit or approved raceway. All wiring shall be suited for the use intended. Wiring shall have **N.E.C. Type FPLR or FPLP** designation for general, plenum and riser use of indoor use. Cables used in underground ducts shall be rated for use in flooded applications. Wiring shall be run continuous from terminal to terminal without splices. Where wire lengths are limited by reel length or where taps are required, provide red NEMA 12 enclosure with terminal blocks mounted at floor level and accessible without the use of ladders or other special equipment.

B. Each field device shall have a red phenolic label with white letters 1/8” high minimum, describing the device number.

C. All wiring within the enclosure shall be identified with wire markers and shall terminate on terminal strips. Any wiring entering or exiting control enclosure shall land on terminal strips. External wiring routed directly to a device or splicing of wires within the enclosure will not be acceptable.

1.11 SURGE PROTECTION

A. All electronic equipment for all systems shall be equipped with UL listed surge protection.

B. Provide lightning protection for all wiring entering or leaving building. Surge protection shall be installed in a junction box at floor level. Label box as “FIRE SYSTEM SURGE PROTECTION”.

1.12 UNIT PRICES

A. Submit unit prices for furnishing and installing each component specified in this SECTION. Each unit price includes all charges for General and Supplementary Conditions, incidental expenses, supervision, materials, labor, testing as required, applicable taxes, insurance, and overhead.

1.13 STANDARDS

A. Standards
   1. All applicable regulations and laws shall apply to any installations. The standards indicated below are referenced as minimum requirements for installation and operation of the Fire Alarm System, unless otherwise noted, and not intended to be inclusive of all requirements. Requirements of appropriate authorities having jurisdiction shall supplement these specifications and indicated standards, and shall take precedence in case of conflict.
   2. All materials and equipment shall comply with the latest revision of the applicable standard(s) in every case where such a standard has been established for the particular type of material in question.
      a. Federal Communication Commission (FCC)
      b. National Fire Protection Association (NFPA)
      c. National Electric Code (NEC)
      d. I.C.C. 2003
      e. Underwriter’s Laboratories (UL)
      f. Institute of Electrical and Electronic Engineers (IEEE)
      g. American National Standards Institute (ANSI)
      h. Uniform Building Code, by the International Congress of Building Officials (ICBO)
      i. Industrial Risk Insurers (IRI)
      j. Factory Mutual (FM)
      k. Americans with Disabilities Act (ADA)
      l. Occupational Safety and Health Act (OSHA)
      m. International Fire Code.
      n. International Building Code.
      o. State of New York Local Codes.
   3. Clarification of differences between standards, codes, Drawings, and/or Specifications will be made by the purchaser’s representative.

B. Approval Drawings And Specifications
   1. Approval Drawings and Specifications: The Contractor shall provide detailed installation Drawings indicating equipment and device locations with detailed routing locations for necessary conduit, cable and wiring. Installation Drawings shall include connection details for all wiring and cable terminations.
   2. All Drawings and Specifications shall be developed through computer based media. Electronic Drawings shall be prepared in a format which can be used directly (without

conversation) by Brookhaven's standard CAD software, "AutoCAD" 2005 or later, for Windows. Drawings and Specifications shall be maintained on CD ROM disk in a self extracting format.

3. The Contractor shall, upon completion of the work, furnish to the Owner, 2 complete sets of 'As Installed" Drawings in the 24 in. x 36 in. size. The Contractor shall also furnish the Owner with 1 complete set of the same Drawings on CD ROM disk as drawn with the latest version of AutoCAD brand software.
   a. The following items shall be included in the Drawings and Specifications:
   b. Names, addresses and phone numbers of Manufacturer's Rep, Engineer and Manufacturer's Service Center.
   c. Detailed system operation.
   d. System block diagram.
   e. System riser diagram with E.O.L. resistors marked.
   f. Device, appliance, control unit and terminal panel mounting details.
   g. Device, appliance, control unit and terminal panel wiring details.
   h. Device, appliance, control unit and terminal panel location details.
   i. Complete Bill of Materials for the Project.
   j. Device list with address and instructions for addressing points.
   k. Complete set of battery calculations for system.
   l. All power requirements, descriptions and sequences.
   m. All wire and symbol legends.
   n. All manufacturer's notes and recommendations.
   o. Capacity of the system is installed and total system capability.

C. Testing and Acceptance
   1. All system equipment and required functionality shall be tested after installation in the presence of the Owner and authority having jurisdiction.
   2. The system installation shall meet all requirements of the Owner, required standards and approving authorities prior to acceptance.
   3. All system components, devices and appliances shall be tested after installation to ensure that:
   4. All required systems and devices are connected.
   5. All connected systems and devices respond and report actual alarm conditions.
   6. All connected systems, devices and appliances respond and report trouble conditions, including circuit conditions.
   7. All alarm monitoring and processing equipment and control units perform under loss of primary power conditions.
   8. All required notification appliance control units and appliances perform under loss of primary power conditions.
   9. All notifications appliances perform in the appropriate manner with minimum required signal levels.
   10. All timed, automatic or interactive system functions perform as required.
   11. For final acceptance, the system must operate for thirty (30) consecutive days without malfunction of any kind, including any function not performed as a part of routine system administration.

D. Training
   1. The Contractor shall provide, at the Owner's facility, the training necessary for the Owner's personnel to perform installation, setup, data input, configuration, operation and maintenance of the system, components and devices. Adequate hands-on training shall be included for system operators. The Contractor shall provide an outline of proposed training for review by the Owner, prior to the commencement of actual training. The training shall be provided in 3 categories:
      a. Installation and Maintenance: For system administrators and personnel responsible for installation and maintenance of system hardware, devices, appliances and circuits.
      b. System Administration: For personnel responsible for total system administration, including software maintenance, setup, configuration and support.
      c. Supervising Station Operator: For supervisors and personnel to be assigned daily operator responsibilities.
   2. The Owner shall identify the numbers of personnel to be trained in each category. (min 24 hours)
   3. Shop Drawings And Product Data

E. Furnish submittals for items that are identified in this SECTION by a different typeface and a bracketed code (e.g., *Item [L]*). Refer to SECTION 01340 for definition of codes for types of submittals and the administrative requirements governing submittal procedure. Additional submittal requirements pertaining to this SECTION are specified herein under this Article.

F. *Shop Drawings [D,P]*: Submit customized wiring diagrams, component product data and installation and operating instructions. Wiring diagrams shall show color coding of connections and mounting dimensions of equipment.

G. *Guarantee [G]*: The entire system and its operation shall be warranted for a period of two years from date of OWNER's acceptance.

H. Submit shop drawings for approval and include complete data on each item. Coordinate the items, as they relate to the WORK, prior to submittal. Shop drawings shall be approved at least 30 days prior to commencement of work and shall include:
   1. *System Plans and Riser Diagrams [D]*: including sizing and routing of all conduits and wire, location of all equipment and devices, junction and pull boxes, and device address.
   2. Data catalog cuts or brochures on all equipment.
   3. Installation hardware and requirements.
   4. Wire and cable.
   5. Complete wiring and connection diagrams of all equipment per JIC EMP-1-1967 interconnect wiring guidelines.
   6. Manufacturers state of New York license number.
   7. Panel layouts, device identification and bill of materials per JIC EMP-1-1967 documentation requirements.

1.14 MAINTENANCE DATA AND OPERATING INSTRUCTIONS

A. Furnish to the OWNER five sets of instruction manuals covering complete operating, service and repair instructions for the equipment furnished and complete illustrated parts breakdown

with manufacturer's name, nomenclature and part number for each component part and assembly, include current unit prices for parts and supplies along with the location of the nearest source of supply and service.

B. During system commissioning and at such time acceptable performance of the system hardware and software has been established, the system supplier shall provide on-site operator instruction to the OWNER's operating personnel. Operator instruction during normal working hours will be performed by competent representatives familiar with the system software, hardware and accessories.

C. At a time mutually agreed upon, the system supplier shall give 80 hours of instruction to the OWNER's designated personnel on the maintenance and trouble shooting of all equipment within the system and describe its intended use with respect to the programmed functions specified. Maintenance and trouble shooting orientation of the system shall include the overall operational program. Equipment functions, commands, advisories and appropriate operator intervention required in responding to the system operation. An OWNER's manual prepared for this project shall be used in addition to the instruction.

D. Additional instruction time as deemed necessary by the OWNER shall be made available by the system supplier on a negotiated basis with the OWNER.

1.15 GUARANTEE

A. The manufacturer shall warrant, *[G]* in writing, all equipment and wiring to be free from all inherent mechanical and electrical defects in material and workmanship for a period of two years commencing at the time of system turnover to the OWNER.

B. If the system fails to completely perform in accordance with the CONTRACT DOCUMENTS, the CONTRACTOR shall take all necessary action to repair or replace parts and wiring modification, at no additional cost to the OWNER, to restore the system to perform in accordance with the CONTRACT DOCUMENTS.

1.16 ENGINEERING FIELD SERVICE

A. The Supplier shall furnish engineering field service as required.

1.17 MAINTENANCE CONTRACT

A. *Maintenance and Service Contract [G]*: shall be submitted with service rates covering all labor and materials necessary to maintain the system and annual testing. The contract shall include a differentiation between and definitions of "emergency" and "non-emergency" service with applicable rates for each.

1.18 SPARE PARTS LIST

A. *Bill of Material [B]*: The supplier shall enclose a complete parts list of the equipment installed with vendor's names, address, telephone number, part numbers, prices and lead time.

1.19 SYSTEM OPERATION

A. The system shall detect changes in status of the monitoring points within the system and shall indicate any such changes at the Fire Alarm Control Panel. The receipt of an alarm shall cause the following.
   1. Display the alarm condition on the alphanumeric display.
   2. Activate evacuation signals assigned through event-initiated programs.
   3. The audio alarm signal shall consist of an alarm tone. The audio alarm signals shall sound until the signal silence switch has been operated.
   4. Activate any assigned control points (addressable control module) through event-initiated programs.
   5. Print the assigned English language message with time and date for the monitored point in alarm on the printer. Exact text for message print out will be provided by the OWNER.
   6. Log the alarm in the historic reporting terminal and generate any action messages.
   7. Sound the alarm signal at the Fire Alarm Control Panel and illuminate the system alarm LED. The alarm signal and LED shall pulse until the appropriate acknowledge switch is depressed which shall cause the alarm signal to be silenced. The system alarm LED shall remain illuminated and the system all clear LED shall not extinguish until the alarm condition has been corrected.
   8. When the alarm condition has been corrected, Fire Alarm Control Panel shall display and print the assigned message for the point in alarm with the suffix “CLR” (clear) and deactivate assigned control points through event-initiated-programs, provided control point priorities allow.

B. The CPU shall supervise the entire operation. Assigned messages shall be displayed for all supervisory trouble conditions. Supervision of the monitor points for trouble shall be on a per point basis.

C. The system shall be capable of providing the following summary print-outs via keyboard required requests:
   1. Alarm Summary - prints all points that are in alarm.
   2. Control Summary - prints all activated (on) control points.
   3. System Summary - prints status of all system points.
   4. Trouble Summary - prints status of any supervisory problem within the system.
   5. Time Summary - prints system time.
   6. Cancel - terminates any requested reports.
   7. In addition, the operator may request the status of any individual monitor or control point using the “list” command and the point ID.
   8. Time Control Summary - prints all assigned time for a respective control point, or prints all control functions for a specific time.

D. Signal Transmission: A combination of hard-wired, using separate individual circuits for each zone of alarm device operation as required, and multiplexing signal transmission for addressable alarm initiation and alarm device operation, dedicated to fire alarm service only.

E. Data Communication Transmission: The peer-to-peer network communication channel shall operate using digital token-ring communication techniques. Communications shall be dedicated to fire alarm service only.

F. The system shall also have provisions for an “alert” message, which will provide specific instructions for the operator on duty. These messages may be up to 5 lines with up to 70 characters in each line. Each system monitor point may have 5 specific alert messages when in alarm. Control points may be assigned alert messages. Control points shall be capable of initiating remote alarm signals or systems, and providing a momentary pulse to allow reset of remotely located fire, security, or other types of local controls by using the manual control feature of the system keyboard. Print-outs shall occur to indicate the status of any such point. Operator message text will be provided by OWNER and shall be input into the system by the unit manufacturer at the factory.

G. The programming language shall consist of simple English language words of 3 or 5 letters and include the ability to create functional operating equations using the following logic elements:
   1. ANDing - The ability to require 2 or more points in an alarm state before control point(s) activation.
   2. ORing - The ability to allow any number of points to cause control point activation.
   3. NOTing - The ability to prevent control activation if a monitor or control is NOT in its normal state.
   4. DELAY - The ability to delay control point activation.
   5. COUNT - The ability to require more than 1 point in alarm before control point activation.
   6. TIMING - The ability to cause control point activation for a specified period.

H. The CPU shall have the ability to accept up to 64 independent programs. Each program shall have (“No Edit” or “Edit”) capability. Each program shall be written in an equation format comparable to ladder logic equations. The equations shall consist of an input statement and an output statement.

I. The input statement defines the condition(s) required to activate the associated statement. The input statement may consist of single or multiple monitor point status, software pseudo point status, time comparison and the utilization of AND, OR, NOT, COUNT, and DELAY logic functions.

J. The output statement defines the action to be taken by the CPU. The output statement may consist of activation/deactivation of single or multiple control functions, pseudo points and SCC LED status indicators. Output statements may also include the “ALERT” message.

K. CPU shall include the following pushbutton, lamps and audible devices:
   1. Priority 1 alarm LED and acknowledge button.
   2. Priority 2 alarm LED and acknowledge button.
   3. Signal silence push button.
   4. Trouble LED and acknowledge button.
   5. System reset push button.
   6. Sonalert to indicate alarm and trouble conditions.

7. LED test push button.
8. Location information.

L. CPU must incorporate circuitry to continuously monitor the communications and data processing cycles of the microprocessor. On CPU failure, an audible and visual signal shall operate to alert on duty personnel.

M. The CPU shall also be equipped with software routines to provide time control allowing a preset program for both on/off and cycling operations to be set in a memory for the operation of electrical loads connected to the FACU control points. Time control shall be totally field programmable utilizing Random-Access-Memory (RAM) and the system keyboard. The CPU shall include software and hardware to maintain accurate information of time of day, day of week, day of month, month and year. In addition, it may be programmed with up to 15 holidays for special time control programs. Program shall provide Julian 365 day year and eight-day week programmability. Also, the real time program shall include leap year capability through the year 2020. System shall have capability of reprogramming for years beyond 2020. Time and date information will be included in all printer and CRT output messages.

N. Permissible Signal Elapse Time: The maximum permissible elapsed time between the actuation of any fire alarm or fire-detection system alarm-initiating device and its indication at the control panel shall be five seconds.

1.20 UNIT PRICES

A. Provide unit prices as required.

PART 2 PRODUCTS

2.1 MANUFACTURER AND MATERIALS

A. Submit with the bid the manufacturer's name & address, and the service facility's name, address & phone number.

B. The manufacturer must be capable of receiving service calls 24 hours a day, 7 days a week with a maximum of 4 hour response time during normal working hours. The manufacturer's service office must be within a radius of 100 miles from the job site.

C. Manufacturers:
1. Siemens XLS-500

2.2 SYSTEM COMPONENTS

A. *Fire Alarm Control Panel (FACP) [D,P]* shall contain the following features:
1. 80 column by 2 line back-lighted LCD readout of point status.
2. Capacity to annunciate 1000 network point and/or point lists.
3. Historical event logs shall maintain separate 600 Alarm and 600 Trouble events.

4. RS232 ports shall be provided:
    a. Interface to serial printer to record network information as programmed at the control panel.
    b. Interface to CRT/Keyboard to display network information as programmed at the control panel.

B. Panel:
1. Control panel construction shall be modular with solid state, microprocessor based electronics. It shall display only those primary controls and displays essential to operation during a fire alarm condition. Keyboards or keypads shall not be required to operate the system during fire alarm conditions. A local audible device shall sound during Alarm, Trouble or Supervisory conditions. This audible device shall also sound during each keypress to provide an audible feedback to ensure that the key has been properly.
2. The following primary controls shall be visible through a front access Unit:
    a. Eighty character liquid crystal display
    b. Red fire alarm LED
    c. Red priority 2 alarm LED
    d. Yellow supervisory service LED
    e. Yellow trouble LED
    f. Green "power on" LED
    g. Yellow signals silenced LED
    h. Fire alarm acknowledge key
    i. Priority 2 alarm acknowledge key
    j. Supervisory service acknowledge key
    k. Trouble acknowledge key
    l. Alarm silence key
    m. System reset key
3. The following programmable secondary control switches and LED's shall be available behind an access door:
    a. [City disconnect/switch]
    b. [Manual evacuation (drill)]
4. The control panel shall provide the following:
    a. Setting of time and date
    b. LED testing
    c. Alarm, trouble, and abnormal condition listing.
    d. Enabling and disabling of each monitor point separately.
    e. Activation and deactivation of each control point separately.
    f. Changing operator access levels.
    g. One Person test enable
    h. Running diagnostic functions
    i. Displaying software revision level
    j. Displaying historical logs
    k. Displaying card status
    l. Point listing
5. For maintenance purposes the following lists shall be available from the point lists menu:
    a. Monitor point list
    b. Signal/horn list

c. Auxiliary control list
d. Feedback point list
e. Pseudo point list
f. LED/switch status list

6. Primary Keys, LED's and LCD Display
   a. The Control Panel shall have a 80 character liquid crystal display which shall be backlit for enhanced readability. So as to conserve battery standby power, it shall not be lit during an AC power failure unless an alarm condition occurs or there is keypad activity.
   b. The display shall support both upper and lower case letters. Lowercase letters shall be used for softkey titles and prompting the user. Uppercase letters shall be used for System Status Information. A cursor shall be visible when entering information.
7. Under normal conditions the front Unit shall display a "System is Normal" message and the current time and date.
8. Should an abnormal condition be detected the appropriate LED (Alarm, Supervisory or Trouble) shall flash. The Unit audible signal shall pulse for alarm conditions and sound steady for trouble and supervisory conditions.
9. The LCD shall display the following information relative to the abnormal condition of a point in the system:
   a. 40 character custom location label
   b. Type of device (i.e. smoke, pull station, waterflow)
   c. Point status (i.e. alarm, trouble)
10. Two methods of acknowledgment for each abnormal condition shall be provided. One may be chosen depending on the NFPA requirements.
11. These acknowledge functions may be pass code protected if the user has insufficient privilege to acknowledge such conditions. A message shall indicate insufficient privilege but allow the user to view the points without acknowledging them. Should the user have sufficient privilege to acknowledge, a message will be displayed informing the user that the condition has been acknowledged.
12. After all points have been acknowledged, the LEDs shall glow steady and the tone alert will be silenced. The total number of alarms, supervisory and trouble conditions shall be displayed along with a prompt to review each list chronologically. The end of the list shall be indicated by an end of list message "END of LIST".
13. Alarm Silencing:
    a. Should the "Alarm Silence" button be pressed all alarm signals shall cease operation and a signals silenced LED will illuminate.
    b. Signals shall not be silenced during alarm silence inhibit mode.
14. System Reset:
    a. The SYSTEM RESET button shall be used to return the system to its normal state after an alarm condition has been remedied. The LCD display shall step the user through the reset process with simple English Language messages. Messages, "SYSTEM RESET IN PROGRESS", will first be displayed followed by the message, "SYSTEM RESET COMPLETED", and finally, "SYSTEM IS NORMAL", should all alarm conditions be cleared.
    b. Should an alarm condition continue to exist the message, "SYSTEM RESET IN PROGRESS", will be followed by the message, "SYSTEM RESET ABORTED", and the system will remain in an abnormal state. System control relays shall not reset. The tone alert and the Alarm LED will be on. The display will indicate the

total number of alarms and troubles present in the system along with a prompt to use the ACK keys to review the points. These points will not require acknowledgment if they were previously acknowledged.

c. Should the Alarm Silence Inhibit function be active, the (SYSTEM RESET) key press will be ignored. The message, "SYSTEM RESET INHIBITED", will be displayed for a short time to indicate the action was not taken. As feedback to the operator, the message "SYSTEM RESET NO LONGER INHIBITED" will be displayed when the inhibit function times out.

15. Function Keys:
    a. Additional function keys shall be provided to access status data for the following points:
        1) Initiating device circuits
        2) Indicating appliance circuits
        3) Auxiliary relays
        4) Feedback points
        5) All other input/output points
    b. The following status data shall be available:
        1) Primary state of point
        2) Zone, PID and card type information
        3) Class "A" status
        4) Current priority of outputs
        5) Disable/Enable status
        6) Verification tallies of initiating devices
        7) Automatic/Manual control status of output points
        8) Acknowledge status
        9) Relay status
16. The system shall be capable of logging and storing 600 events in an alarm log and 600 events in a trouble log. Each recorded event shall include the time and date of that event's occurrence.
    a. The following Historical Alarm log events shall be stored:
        1) Alarms
        2) Alarm acknowledgment
        3) Alarm Silence
        4) System reset
        5) Alarm historical log cleared
    b. The following Historical Trouble log events shall be stored:
        1) Trouble conditions
        2) Supervisory alarms
        3) Trouble acknowledgment
        4) Supervisory acknowledgment
        5) Alarm verification tallies
        6) One Person test results
        7) Trouble historical log cleared
17. LED Supervision: All control module LEDs shall be supervised for burnout or disarrangement. Should a problem occur the LCD shall display the module and LED location numbers to facilitate location of the LED.
18. System Trouble Reminder: Should a trouble condition be present within the system and the audible trouble signal silenced, the trouble signal shall resound at preprogrammed

time intervals to act as a reminder that the fire alarm system is not 100% operational. Both the time interval and the trouble reminder signal shall be programmable to suit the OWNER's application.

19. Access Levels:
    a. There shall be four (4) access levels with level 4 being the highest level. Level 1 actions shall not require a passcode. Passcodes shall consist of up to ten (10) digits. Changes to passcodes shall only be made by authorized personnel.
    b. In order to maintain security when entering a passcode the digits entered will not be displayed but a cursor will move along filling the position with an x to indicate that the digit has been accepted.
    c. When a correct passcode is entered, the message "Access Granted" shall be displayed. The new access level shall be in effect until the operator manually logs out or the keypad has been inactive for ten (10) minutes.
    d. Should an invalid code be input, the operator shall be notified with the message, "ERROR INCORRECT PASSCODE", and shall be allowed up to three chances to enter a valid code. After three unsuccessful tries, the message, "ACCESS DENIED", shall be displayed. The level shall not be altered, and the operator shall no longer be in the menu option.
20. Access to a level will only allow the operator to perform all actions within that level plus all actions of lower levels, not higher levels.
21. The following keys/switches shall have access levels associated with them:
    a. Alarm silence
    b. System reset
    c. Set time/date
    d. Manual control
    e. On/off/auto control
    f. Disable/enable
    g. Clear historical alarm log
    h. Clear historical trouble log
    i. One person testing
    j. Change alarm verification
22. The FACP cabinet shall be mounted in a NEMA 12 Enclosure and shall be painted “FIRE ALARM RED”.

C. *Addressable Interface Module [D,P]:*
1. Communication with addressable devices: The system must provide communication with all initiating and control devices individually. All of these devices are to be individually annuciated at the control panel. Annunciation shall include the following conditions for each point:
    a. Alarm
    b. Trouble
    c. Open
    d. Short
    e. Ground
    f. Device Fail/or Incorrect Device
2. All addressable devices are to have the capability of being disabled or enabled individually.
3. Up to 127 addressable devices may be multidropped from a single pair of wires.

4. Isolator Module - A Isolator module shall be required to isolate each (zone) (floor) of addressable devices. The Isolator module shall operate as an addressable device with the same capabilities of enable, disable and annunciation.
5. Format: The communication format shall completely digital. A high degree of communication reliability must be obtained by using parity data bit error checking routines for address codes and check sum routines for the data transmission protocol. systems that do not utilize full digital transmission protocol (i.e., that may use time pulse width methods to transmit data etc.) will not be acceptable (since they are considered unreliable and prone to errors).
6. Identification of Addressable Devices: Each addressable device must be uniquely identified by an address code entered on each device at time of installation. The use of jumpers to set address will not be acceptable due to the potential of vibration and poor contact.
7. Wiring Type, Distances, Survivability and Configurations: Wiring types will be approved by the equipment manufacturer. The system must allow up to 2,500 feet wire length to the furthest addressable device. Class A communication will be provided where shown on the DRAWINGS. Wire will be so routed to maintain sufficient distance between the forward and return loop as called for by the Authority Having Jurisdiction (AHJ).

D. *Addressable Pull Stations [D,P]:* Addressable pull stations shall contain electronics that communicate the station's status (alarm, normal) to the transponder over two wires which also provide power to the pull station. The address will be set on the station. They will be manufactured from high impact red lexan type of plastic. Lettering will be raised and painted white. Station will mechanically latch upon operation and remain so until manually reset by opening with a key common to all system locks. Pull stations will be dual (push/pull) action.

E. *Detector Bases [D,P]:* Detector bases shall contain electronics that communicate the detector status (normal, alarm, trouble) to the transponder over two wires. The same two wires shall also provide power to the base and detector. A trouble signal will be transmitted to the transponder and CPU if a detector is removed from the base. The following detector heads shall be provided.
1. Photoelectric Detector [D,P] shall be UL listed. They shall work on the photoelectric principle, use a stable LED light source and silicon photodiode as the receiving element to form a highly accurate means of smoke detection. The detector shall be sealed against rear air flow and have a 30-mesh insect guard.
2. Thermal sensors shall operate on the "Rate of Riser" principles. The sensor shall also contain state-of-the-art dual thermistor sensing circuitry for fast response.
3. A LED visual indicators providing local 360-degree visibility of operating status and alarm indication shall be provided on each sensor. The LED's shall pulse periodically indicating that power and communication is being supplied to the sensor. This feature shall be field programmable. Upon alarm these two LED's shall light continuously. A visible alarm signal shall be capable of being remotely annunciated.
4. Smoke Sensor Sensitivity Adjustment:
   a. Authorized operation of controls at the control panel shall cause the selection of specific addressable smoke sensors for adjustment, display of their current status and sensitivity settings, and control of changes in those settings.
   b. Remote Controllability: Individually monitor sensors at the control panel for calibration, sensitivity, and alarm condition, and individually adjust for sensitivity

from the control panel. The alarm decision for each sensor shall be determined by the control panel. The control panel shall determine the condition of each sensor by comparing the sensor value to the stored values.

c. The sensitivity of each sensor will be as high as it can possibly be for its location without being so sensitive that it will be nuisance alarm-prone.

d. Smoke Sensor Sensitivity: Between .2-and 3.7-percent-per-foot smoke obscuration when tested according to UL 268.

e. The control panel shall maintain a moving average of the sensors smoke chamber value to automatically compensate (move the threshold) for dust, dirt, and component degradation conditions that could affect detection operations. The control panel shall automatically maintain a constant smoke obscuration sensitivity for each sensor (via the floating threshold) by compensating for environmental factors.

f. The control panel shall automatically indicate when an individual sensor needs cleaning. When a sensors average value reaches a predetermined value, a "DIRTY SENSOR" trouble condition shall be audibly and visually indicated at the Network Display Unit. Additionally, the LED on the sensor base shall glow steady giving a visible indication at the sensor location. If a "DIRTY SENSOR" is left unattended, and its average value increases to a second predetermined value, an "EXCESSIVELY DIRTY SENSOR" trouble condition shall be indicated at the control panel. To prevent false alarms, these "DIRTY" conditions shall in no way decrease the amount of smoke obscuration necessary for system activation.

g. The control panel shall continuously perform an automatic self-test routine on each sensor which will functionally check sensor electronics and ensure the accuracy of the values being transmitted to the control panel. Any sensor that fails this test shall indicate a "SELF TEST ABNORMAL" trouble condition.

5. Smoke detectors shall be resettable from the control panel.

F. *Photoelectric Smoke Duct Detectors [D,P]:* Smoke duct detectors shall be 4 wire, 24 V DC. They shall have an air tight rugged constructed housing with a see-through face plate. They shall have an auxiliary relay rated 10 amps and sampling and exhaust tubes. Where duct detectors are not accessible, a remote alarm indicator shall be supplied. Detectors shall be furnished, installed and wired by this Contractor.

G. *Audible Signaling Devices [D,P]:* Audible signaling devices for high noise areas shall be UL listed speakers. They shall be all metal construction with built-in high efficiency tone driver. It shall be constructed to be water, humidity and vermin proof, and all components shall be enameled or plated to assure protection against corrosion. The speaker shall have a variable position switch providing a quick method of changing taps. It shall have a omni-purpose mounting bracket. Speakers shall be Fire Alarm Red tapped at 7.5 Watts.

H. *Audible Signaling Devices [D,P]:* Audible signaling devices for the building shall have a die cast red housing and a high efficiency multitone driver. They shall be moisture, corrosion, vibration and vermin resistant. They shall have multi-tap power selection and be flush mounted. Speakers shall be Fire Alarm Red tapped at 4 Watts.

I. Visual Signaling Devices:
   1. *Visual Signaling Devices [D,P]: Visual Signaling Devices [D,P]* shall be xenon flasher type. In building areas the visual signaling device shall be in a common enclosure with the audible signaling device. Single hi-intensity strobe shall be in a single enclosure. Strobe lights shall meet ADA requirements.

J. *Addressable Monitor and Control Modules [D,P]:* Modules shall be used for monitoring of waterflow, valve tamper, fire extinguishing control units.
   1. Addressable monitor modules shall be capable of mounting in a standard electric outlet box. Modules will include cover plates to allow surface or flush mounting. Modules will receive their operating power from the signaling line.
   2. There shall be two types of modules:
      a. Type 1: Monitor Modules: This type of module is an individually addressable module that has both its power and its communications supplied by the two wire multiplexing signaling line circuit. It provides location specific address ability to an initiating device by monitoring normally open dry contacts. This module is required for monitoring waterflow and tamper switches.
      b. Type 2: Control Circuit Interface Module: Module for other device control with Class B wiring supervision.
   3. The monitor and control modules shall be supervised and uniquely identified by the control unit. Module identification shall be transmitted to the control unit for processing according to the program instructions. Should the module become non-operational, tampered with, or removed, a discrete trouble signal, unique to the module, shall be transmitted to, and annunciated at, the control panel. The modules shall be capable of being programmed for its "address" location on the multiplexing signaling line circuit. The modules shall also be compatible with addressable manual stations and addressable detectors on the same multiplexing signaling line circuit.

K. *Annunciator [D,P]:* Annunciator shall be LCD Type, Semi-flush mounted in finished areas and Surface Mounted in unfinished areas.

PART 3 EXECUTION

3.1 INSTALLATION

A. Furnish and install in accordance with manufacturer's instructions, all wiring, conduit and outlet boxes required for the erection and operation of a complete system as shown on the DRAWINGS. All wiring shall meet all the requirements of national, state and local electrical codes.

B. Addressable pull stations and smoke detectors shall have integral electronics to monitor the device. All other devices shall be wired to field mounted addressable monitor modules.

C. Wiring shall be run for all lengths less than 1000 feet without splices. Where wire runs are of lengths greater than 1000 feet, cable pulling tension calculations shall be submitted to the OWNER prior to installation. Where splicing is necessary, splicing shall be only in junction boxes at floor level on terminals.

D. “Tee” tapping of device wiring will not be permitted. Daisy chain connection will only be allowed.

E. Final connections between the equipment shall be made under direct supervision of a representative of the manufacturer.

F. Contractor shall submit installation schedule to the OWNER 30 days prior to commencement of work to provide for coordination of system interruption.

3.2 CABLE INSTALLATION

A. All circuits shall be protected to avoid interruption of service due to short-circuiting or other conditions which might adversely affect the connected devices. Each individual signaling circuit shall be classified as a circuit pair.

B. All cabling in racks, cabinets and junction boxes shall be neatly strapped, dressed and adequately supported. Cable installation shall conform to good engineering practices and to the standards of the most current National Electrical Code.

C. Cables shall be terminated with the proper connector required for the associated operation of the equipment to which it is connected. Screw terminal blocks shall be furnished for all cables which interface with racks, cabinets, consoles or equipment modules. Wire shall be interfaced with screw terminal blocks with an installation tool specifically recommended by the manufacturer of the lug. Evidence of the installation of cable and wires without the appropriate connectors, shall be sufficient cause for rejection of the work and reinstallation of the cables or wires.

D. Where cables or wires require soldering, the soldering shall be done using rosin core solder and controlled temperature soldering equipment. Evidence of solder joints not made with rosin core solder or with non-temperature controlled tools shall be sufficient cause for rejection of the work and resoldering of all connections.

E. Every cable or wire shall be labeled or coded at each end. Each terminal of each field terminal strip shall be permanently labeled or coded to show the zone, instrument of item served.

F. All cables within a rack, console or junction box shall be grouped according to the signals being carried to reduce signal contamination.

G. All wiring shall be in conduits.

H. Cables shall be run in continuous lengths except for terminations. No splices shall be permitted in any conduit run, terminal cabinets or control enclosures.

3.3 INSTALLATION AND TESTING

A. Every device shall be physically tested, and the results recorded. The system shall demonstrate a minimum of 30 days trouble free operation before acceptance by the Owner. A report shall be given to the Owner’s Representative record at the office of the architect. Each indicating

and signaling circuit shall be tested to verify monitoring of electrical supervision for opens, shorts and grounds. Provide training to the Owner's personnel in the system operation. At the conclusion of testing and the completion of training, present the system to the Owner for final acceptance. Turn over to the Owner's Representative all keys, 3 copies of system literature, including training manuals, testing reports, system riser diagrams and a complete set of accurate as built plans. An electronic copy of all information including Drawings and product data shall be provided to the Plant's Electrical Engineer on CD ROM.

B. **Adjust the sound level of each speaker to produce a sound level 15 dB over the expected ambient sound level in each area under normal plant operating conditions.** After completion of testing of the fire alarm signaling system, readjust the sound level of the horns and speakers as required to meet this criterion. For bidding purposes, assume that 10 percent of the speakers will require readjustment after testing.

C. Upon completion of the installation the Contractor shall provide as built drawings of all wiring diagrams, conduit layouts, device locations and addresses, and locations of all equipment associated with the system.

D. The following summary of system features shall be duplicated, completed and returned to the purchaser. Attach pages for additional information

3.4 ON-SITE ASSISTANCE

A. Occupancy Adjustments: When requested within 1 year of date of Substantial Completion, provide on-site assistance in adjusting sound levels, controls, and sensitivities to suit actual occupied conditions. Provide a separate price for up to 3 requested adjustment visits to the Site for this purpose.

END OF SECTION

Revision History	
Date	**Rev. No.**
D	0
E	0
F	0
02-19-09	0

RGM/ca
C:\d\timsdatasf\brookhaven_national_laboratory\sf070003\200-projexec\280-spec\16721.doc

THIS PAGE INTENTIONALLY LEFT BLANK

SECTION 16741

PAGING SYSTEM

PART 1 GENERAL

1.1 DESCRIPTION

A. Description Of System
   1. The paging system shall meet the following requirements.
      a. Telephone Page: Ability to page individual zone or areas and/or all areas or zones at the same time.
      b. Microphone Page: Ability to page individual zones or areas and/or all areas or zones at the same time.
      c. Extend an existing system.

1.2 RELATED WORK SPECIFIED IN OTHER SECTIONS

A. Division 16 Section “Basic Electrical Materials and Methods”.

B. Division 16 Section “Electrical Identification”.

C. Division 16 Section “Wire and Cable (600 volts and less)”.

D. Division 16 Section “Wiring and Control Devices”.

1.3 QUALITY CONTROL

A. Source Quality Control
   1. Furnish equipment and materials listed in the current, latest issue having a date prior to issue date of Specifications, of Equipment Publications and Underwriters’ Laboratories, Inc., bearing the UL Label and wherever standards have been established by NFPA, IEEE, ASTM, ANSI, ICEA and NEMA for equipment referenced to such standards in this document. Furnish equipment and materials conforming to the requirements of the National Electrical Code and the requirements of the Contract Documents.

B. Field Quality Control
   1. Install equipment and material in compliance with the regulations of Local, State and Governmental laws governing electrical installations, the latest edition of the National Electrical Code and the requirements of the Contract Documents.

C. Quality Assurance
   1. All tradesmen shall review the specifications herein with particular attention paid to the related sections. CLOSE COORDINATION IS ESSENTIAL TO THIS PROJECT!
   2. Completely review all functions and layout of paging system unit components prior to permitting installation.
   3. Bench test all components prior to installation.
   4. Provide factory-trained personnel to conduct final site inspection, testing, start-up and programming.

1.4 EQUIPMENT SUPPLIER QUALIFICATIONS

A. The supplier of the system shall maintain permanent service facilities in the area of the installation. The facilities shall include a permanent source of factory trained service technicians on 24 hour call experienced in servicing this type of equipment and shall provide warranty and routine maintenance service to afford the Owner maximum coverage. He shall also provide a central source of support to guarantee immediate answers to the Owner's problems resulting from malfunctioning and/or misunderstanding of the operation of the equipment.

1.5 EQUIPMENT INSTALLER QUALIFICATIONS

A. The installation of the system shall be performed by fully qualified personnel having had experience on the installation of this type of system and able to certify that they have had no less than 5 years of continuous experience in this area and have made installations similar to this and of this size or larger.

B. Contractor shall install the system under the supervision of the manufacturer and test the system in the presence of the Owner's Representative. Contractor shall submit all test reports to the Owner's Representative.

1.6 WIRING

A. All wiring shall be in accordance with the manufacturers recommendation. All wiring must be installed in conduit or approved raceway. **Cables used in underground ducts shall be rated for use in flooded applications.** Wiring shall be run continuous from terminal to terminal without splices.

B. All cabinets shall have surge suppressers provided for incoming power and speaker circuits.

1.7 SURGE PROTECTION

A. All electronic equipment for all systems shall be equipped with surge protection.

B. Provide lightning protection for all wiring entering or leaving building. Surge protection shall be installed in a junction box at floor level. Label box as "PAGING SYSTEM SURGE PROTECTION".

1.8 SUBMITTALS

A. Unit Prices
   1. Submit unit prices for furnishing and installing each component specified in this Section. Each unit price includes all charges for General and Supplementary Conditions, incidental expenses, supervision, materials, labor, testing as required, applicable taxes, insurance, and overhead.

B. Shop Drawings And Product Data

1. Furnish submittals for items that are identified in this Section by a different type face and a bracketed code. Additional submittal requirements pertaining to this Section are specified herein under this Article. The type of submittals are defined as follows:
   a. B - Bill of Materials: A detailed description of an assembly or components, including quantity.
   b. C - Certificate: A notarized form or letter attesting to the quality of workmanship or product as measured by standards, codes or criteria specified in the Specifications.
   c. D - Shop Drawings: Drawings, diagrams, schedules, illustrations or similar data specifically prepared for Work on this Project by the Contractor, subcontractor, distributor, or manufacturer to illustrate a product or a particular portion of the Work.
   d. E – Extra Stock: Additional stack of specified material/products to be turned over to the Owner upon completion of project.
   e. G - Guarantee: Written statement guaranteeing the product or a particular portion of the Work to be and remain free from defects in materials or workmanship for a definite period of time from date of acceptance of the Work.
   f. L - Letter of Compliance: Written statement confirming that the product or a particular portion of the Work conforms to the requirements of the Contract Documents.
   g. P - Product Data: Brochures, pictures, illustrations, diagrams, color charts or similar printed data of a manufactured product that is incorporated into the Work.
   h. Q - Qualifications: Notarized statements attesting to the quality of workmanship, firm or individual as measured by standards, codes or criteria specified in the Specifications.
   i. R - Record: Data substantiating the performance of a product, or a particular portion of the Work, and which does not require prior review and approval by the Owner's Representative, but is required for record purposes only. Performance data and other data may be required.
   j. S - Samples: Physical examples of sufficient size to clearly illustrate functional characteristic of the product or assembly, or to show color, texture or pattern, as appropriate.
   k. T - Test Report: Report, from a qualified testing agency, of actual tests conducted on products, assemblies or particular completed portions of the Work, measured against standards, codes or criteria specified in the Specifications. Each report shall state the values obtained for comparison with the stated standard, code or criteria specified in the Specifications.
   l. List of Units provided, with unit identifications per Drawings, unit descriptions, ratings, types and catalog numbers are required for review purposes.
2. *Shop Drawings [D,P]*: Submit customized wiring diagrams, component product data and installation and operating instructions. Wiring diagrams shall show color coding of connections and mounting dimensions of equipment.
3. *Guarantee [G]*: The entire system and its operation shall be warranted for a period of 2 years from date of Owner's acceptance.
4. Submit shop drawings for approval and include complete data on each item. Coordinate the items, as they relate to the Work, prior to submittal. Shop drawings shall be approved at least 30 days prior to commencement of work and shall include:
   a. System plans and riser diagrams: including sizing and routing of all conduits and wire, location of all equipment and devices, junction and pull boxes, and device address.

b. Data catalog cuts or brochures on all equipment.
c. Installation hardware and requirements.
d. Wire and cable.
e. Complete wiring and connection diagrams of all equipment.

5. Furnish 1 electronic copy of Final, as Constructed, Shop Drawings and Product Data on CD ROM.

C. Maintenance Data And Operating Instructions

1. Furnish to the Owner 3 sets of instruction manuals and 1 set of manuals on electronic media (CD ROM) covering complete operating, service and repair instructions for the equipment furnished and complete illustrated parts breakdown with manufacturer's name, nomenclature and part number for each component part and assembly, include current unit prices for parts and supplies along with the location of the nearest source of supply and service.
2. During system commissioning and at such time acceptable performance of the system hardware and software has been established, the system supplier shall provide on-site operator instruction to the Owner's operating personnel. Operator instruction during normal working hours will be performed by competent representatives familiar with the system software, hardware and accessories.
3. At a time mutually agreed upon, the system supplier shall give 40 hours of instruction to the Owner's designated personnel on the maintenance and trouble shooting of all equipment within the system and describe its intended use with respect to the programmed functions specified. Maintenance and trouble shooting orientation of the system shall include the overall operational program. Equipment functions, commands, advisories and appropriate operator intervention required in responding to the system operation. An Owner's manual prepared for this project shall be used in addition to the instruction.
4. Additional instruction time as deemed necessary by the Owner shall be made available by the system supplier on a negotiated basis with the Owner.

D. *Guarantee [G]*:

1. The manufacturer shall warrant, in writing, all equipment and wiring to be free from all inherent mechanical and electrical defects in material and workmanship for a period of 2 years commencing at the time of system turnover to the Owner.
2. If the system fails to completely perform in accordance with the Contract Documents, the Contractor shall take all necessary action to repair or replace parts and wiring modification, at no additional cost to the Owner, to restore the system to perform in accordance with the Contract Documents.

E. Engineering Field Service

1. The Supplier shall furnish engineering field service as required.

F. Maintenance Contract

1. *Maintenance and Service Contract [G]*: shall be submitted with service rates covering all labor and materials necessary to maintain the system. The contract shall include a differentiation between and definitions of "emergency" and "non-emergency" service with applicable rates for each.

G. Spare Parts List
   1. *Bill of Material [B]*: The supplier shall enclose a complete parts list of the equipment installed with vendor's names, address, telephone number, part numbers, prices and lead time.

1.9 THE CONTRACTOR SHALL SUPPLY THE FOLLOWING ITEMS:

A. Complete system design and documentation. Equipment documentation to include manufacturer's specifications for all components.

B. Field verify all Owner supplied information prior to submission of project proposal.

C. Field installation of all equipment including conduit and wiring, ancillary devices and equipment enclosures, as required by the Owner.

D. Supervision to coordinate and oversee the entire system installation and start-up, as required by the Owner.

E. Service personnel available for 3 years after system acceptance.

F. Training of plant personnel in operation and maintenance of the system, as required by the Owner.

1.10 THE OWNER SHALL SUPPLY THE FOLLOWING ITEMS:

A. Personnel to develop the system data file relative to schedules and equipment. This function shall be monitored/controlled under the direction of the Contractor's Representative.

B. Equipment room preparation and rearrangement including all overhead lighting and mechanical and electrical service. The Contractor shall indicate in its proposal the environmental conditions and space requirements necessary for installation of the proposed system.

1.11 STANDARDS

A. Standards
   1. All applicable regulations and laws shall apply to any installations. The standards indicated below are referenced as minimum requirements for installation and operation of the Paging System, unless otherwise noted, and not intended to be inclusive of all requirements. Requirements of appropriate authorities having jurisdiction shall supplement these specifications and indicated standards, and shall take precedence in case of conflict.
   2. All materials and equipment shall comply with the latest revision of the applicable standard(s) in every case where such a standard has been established for the particular type of material in question.
      a. Federal Communication Commission (FCC)
      b. National Electric Code (NEC)
      c. National Building Officials Code Administrator (BOCA)
      d. Underwriter's Laboratories (UL)
      e. Institute of Electrical and Electronic Engineers (IEEE)

f. American National Standards Institute (ANSI)
g. General Motors Electrical Standards for Building and Facilities
h. General Motors Basic Electrical Installation Standards EI-1 for Industrial Equipment
i. Uniform Building Code, by the International Congress of Building Officials (ICBO)
j. Industrial Risk Insurers (IRI)
k. Factory Mutual (FM)
l. Americans with Disabilities Act (ADA)
m. Occupational Safety and Health Act (OSHA)
n. International Building Code
o. State of New York Building Codes

3. Clarification of differences between standards, codes, Drawings, and/or Specifications will be made by the purchaser's representative.

B. Approval Drawings And Specifications

1. Approval Drawings and Specifications: The Contractor shall provide detailed installation Drawings indicating equipment and device locations with detailed routing locations for necessary conduit, cable and wiring. Installation Drawings shall include connection details for all wiring and cable terminations.
2. All Drawings and Specifications shall be developed through computer based media. Electronic Drawings shall be prepared in a format which can be used directly (without conversation) by General Motor's standard CAD software, "AutoCAD", for Windows, operating under MSDOS. Drawings, electronic file and layering requirements to be satisfied are described within the latest edition of the General Motors Facilities Graphics Standards Manual. Drawings and Specifications shall be maintained on CD ROM disk in a self extracting format.
3. The Contractor shall, upon completion of the work, furnish to the Owner, 2 complete sets of 'As Installed" Drawings in the 24 in. x 36 in. size. The Contractor shall also furnish the Owner with 1 complete set of the same Drawings on CD ROM disk as drawn with the latest version of AutoCAD 2000 brand software.
   a. The following items shall be included in the Drawings and Specifications:
      1) Names, addresses and phone numbers of Manufacturer's Rep, Engineer and Manufacturer's Service Center.
      2) Detailed system operation.
      3) System block diagram.
      4) System riser diagram with E.O.L. resistors marked.
      5) Device, appliance, control unit and terminal panel mounting details.
      6) Device, appliance, control unit and terminal panel wiring details.
      7) Device, appliance, control unit and terminal panel location details.
      8) Complete Bill of Materials for the Project.
      9) Device list with address and instructions for addressing points.
      10) Complete set of battery calculations for system.
      11) All power requirements, descriptions and sequences.
      12) All wire and symbol legends.
      13) All manufacturer's notes and recommendations.
      14) Capacity of the system is installed and total system capability.

C. Coordination of Work

1. Installation of the new system shall be scheduled and performed in such manner as to prevent disruption or interference with the purchaser's business or other activities.

2. Installation of the new system shall be scheduled in such manner that the least amount of necessary disruption of Security monitoring is permitted at any given time. The purchaser's representative shall be notified, in advance, of any disruption in service in monitoring or occupant notification capabilities and the duration of such disruptions.

D. Testing and Acceptance
1. All system equipment and required functionality shall be tested after installation in the presence of the Owner and authority having jurisdiction.
2. The system installation shall meet all requirements of the Owner, required standards and approving authorities prior to acceptance.
3. All system components, devices and appliances shall be tested after installation to ensure that:
   a. All required systems and devices are connected.
   b. For final acceptance, the system must operate for thirty (30) consecutive days without malfunction of any kind, including any function not performed as a part of routine system administration.

E. Training
1. The Contractor shall provide, at the Owner's facility, the training necessary for the Owner's personnel to perform installation, setup, data input, configuration, operation and maintenance of the system, components and devices. Adequate hands-on training shall be included for system operators. The Contractor shall provide an outline of proposed training for review by the Owner, prior to the commencement of actual training. The training shall be provided in 3 categories:
   a. Installation and Maintenance: For system administrators and personnel responsible for installation and maintenance of system hardware, devices, appliances and circuits.
   b. System Administration: For personnel responsible for total system administration, including software maintenance, setup, configuration and support.
   c. Supervising Station Operator: For supervisors and personnel to be assigned daily operator responsibilities.
2. The Owner shall identify the numbers of personnel to be trained in each category.

PART 2 PRODUCTS

2.1 MATERIALS

A. Manufacturer
1. Dukane
2. Atlas/Soundolier
3. Bogen Sound
4. Owner approved equal.

B. Equipment
1. The Paging Sound System shall consist of the appropriate preamplifiers, power amplifiers, power supplies, and speakers to meet the requirements as shown on the Drawings and of this SPECIFICATION.

C. *Power Amplifier [D,P]*:

1. The amplifier shall employ silicon transistors exclusively and be capable of delivering required output at less than 3% distortion 40 to 10,000 Hz. The frequency response shall be 20 to 20,000 Hz +/- 2 dB. Noise level shall be at least 75 dB below rated output. Input shall be 100,000 ohms single ended. Rated output shall be obtained with 0.4 volt input. Balanced or single ended 70 volt output shall be available at a screw terminal strip. Output regulation shall be within 2 dB from no load to full load. The amplifier shall supply auxiliary voltage of 28 volts dc. An input level control shall be provided.
2. The unit shall operate on 105-125 volts, 50-60 Hz. The amplifier shall have protective circuits including a thermally operated relay and an automatically resetting electronic circuit to reduce dissipation under overload or short circuit conditions. Provide 1 extra amplifier for backup.
3. Bogen Model Black Max Series X450.

D. *Mixer-Preamplifier [D,P]*:

1. The Mixer-Preamplifier shall provide facilities for 8 inputs. The panel shall be completely solid-state with low distortion and noise operation. The microphone inputs shall be transformer coupled, and the unit shall be protected from R. F. interference.
2. The unit shall provide a single-ended audio output of 1 Vrms (nominal) and shall require a 120 VAC input. Controls shall include individual microphone level controls, auxiliary fader control, bass and treble controls, a master volume control, and a lighted power ON-OFF switch.
3. The mixer-preamplifier shall provide a telephone input to facilitate remote paging via the telephone system:
4. Caps shall be placed on all controls on the mixer except:
   a. Volume control for each paging zone.
   b. Microphone page
   c. Telephone Page
   d. See paging system Riser Diagram for paging zone designations.
5. Bogen Model CAM8PRO.

E. *Wall Mounted Equipment Rack [D,P]*:

1. The equipment rack [D,P] shall provide 17-1/2” of vertical front panel space for mounting standard 19” equipment panels horizontally.
2. The unit shall be constructed of 16 gauge steel with panel mounting rails of 16 gauge steel. All joining steel shall be welded and bonded to form a sturdy, solid assembly. Use of lighter gauge steel and bolted-type construction is not acceptable.
3. All panel mounting screws shall be concealed by vertical trim strips when the rack is completely assembled. The rack shall provide a hinged, removable, louvered, locking, back door. Also provide blank plates as required. **Size equipment racks to the size of sound equipment provided.** Provide each equipment rack with a U.L. listed multi-outlet strip with at least 6 AC outlets, an AC Power Panel, and cooling fans.
4. Dukane
5. Soundolier

F. *Speakers [D,P]*:

1. (High noise level areas) Each speaker shall have a power rating of 30 watts full range. The frequency range shall be 300 to 3,900 Hz.
2. The trumpet shall have a screwdriver adjustable switch which can be set externally to select 30, 15, 7.5, 3.7, 1.8 watts on a 70-volt line. Available impedances shall be 2500,

1300, 666, 333, 167, 89 and 45 ohms. The sound pressure level shall be 125dB on axis the dispersion 85°.

3. The trumpet shall be 21” wide, 8” (20 cm) high, 16” deep and finished in beige, baked enamel. External connections shall be to screw terminals. The terminals housing and transparent cover shall function together as a cable strain relief. The trumpet shall be provided with a 3 adjustable mounting bracket. The assembly weight shall not exceed 15 pounds.
4. Atlas Sound Model No. DR-42 with PD-30T Tapped @ 15 Watts or match existing.

G. *Flush Ceiling Mounted Loudspeakers [D,P]*:

1. Flush mounted loudspeaker shall be an 8 inch permanent magnet cone type having a viscous-damped cone and a ceramic (Index 5) magnet weighing at least 6 oz. It shall have a frequency range of at least 50 to 12,000 cycles, a 25 watt program power-handling capability, and an axial sensitivity of at least 95 dB at 4 ft. with a 1-watt input. Voice coil shall be 3/4 inch diameter with an 8-ohm impedance.
2. The speaker shall be equipped with a [**70**] volt line matching transformer. The transformer shall provide 1/2, 1, 2 and 4-watt power taps.
3. The speaker shall be tapped at 2 watts initially. All units shall be adjusted in the field for sound levels required in each area under actual operating conditions.
4. Bogen Model No. S86T725 PG8WBRVR.

H. *Telephone Paging Interface Card [D,P]*:

1. The paging system shall be equipped with the BogenModel TAMB PABX Station Access Card. The TAMB shall be a ring-activated card with a ring sensitivity of 20Hz to 60Hz at 65 to 120 volts. It shall interface the paging system with a PABX or a CENTREX station line. The access card shall plug into a prewired, designated slot in the system, and shall require no further connections.
2. The card shall have an adjustable size timer that starts when the card is activated and deactivates the card when it finishes its adjustable duration. The seize timer shall have a range of approximately 5 to 50 seconds. The card shall have an IN USE LED on the card bracket that lights while the card is activated.
3. The card shall generate 3 selectable tones: An annunciator tone that indicates when the system has connected a paging telephone to system speakers for an announcement (sounds at the telephone earpiece and at all connected speakers), an access tone that sounds at the telephone earpiece (used only with zone paging to indicate that the system has been accessed and the zone number can be dialed), and an end-of-message tone that sounds at the telephone earpiece when the seize timer finishes to warn the pager that the paging system will disconnect. The card shall provide an ON/OFF switch for each tone and shall have 1 additional control for setting the volume of all 3.

I. *Wiring [D,P]*:

1. All wiring shall be in accordance with the manufacturer’s recommendation. All wiring must be installed in conduit or approved raceway.

PART 3 EXECUTION

3.1 INSTALLATION

A. General
1. Install all equipment at locations indicated on the Drawings, and secure to ceilings, ceiling supports, walls, floors or structural members as required.
2. Provide wire and cable conforming to general use wire specified in Division 16 Section "Wire and Cable (600 volts and less)", except where special wire or cable is indicated on the Drawings or specified in this Section.
3. Install all wiring in conduit.
4. Wiring shall be run for all lengths less than 1000 feet without splices. Where wire runs are of lengths greater than 1000 feet, cable pulling tension calculations shall be submitted to the Owner prior to installation. All splices shall be made in terminal boxes mounted at floor level.
5. Speakers shall be zoned as shown on the drawings.
6. Speaker wiring shall be labeled as per circuit number at each termination point.

B. Cable Installation
1. All cabling in racks, cabinets and junction boxes shall be neatly strapped, dressed and adequately supported. Cable installation shall conform to good engineering practices and to the standards of the most current National Electrical Code.
2. Cables shall be terminated with the proper connector required for the associated operation of the equipment to which it is connected. Screw terminal blocks shall be furnished for all cables which interface with racks, cabinets, consoles or equipment modules. Wire shall be interfaced with screw terminal blocks with an installation tool specifically recommended by the manufacturer of the lug. Evidence of the installation of cable and wires without the appropriate connectors, shall be sufficient cause for rejection of the work and reinstallation of the cables or wires.
3. Where cables or wires require soldering, the soldering shall be done using rosin core solder and controlled temperature soldering equipment. Evidence of solder joints not made with rosin core solder or with non-temperature controlled tools shall be sufficient cause for rejection of the work and resoldering of all connections.
4. Every cable or wire shall be labeled or coded at each end. Each terminal of each field terminal strip shall be permanently labeled or coded to show the zone, instrument of item served.

C. Testing
1. All systems shall be tested [T] in the field under actual operating conditions to assure proper operation. **Speaker volumes shall be adjusted to maintain proper output for the area of use.** All final tests shall be witnessed by the Owner's Representative Submit 3 copies of test procedures to the Owner.

END OF SECTION

Revision History	
Date	**Rev. No.**
D	0
E	0
F	0
02-19-09	0

RM/ca
C:\d\timsdatasf\BROOKHAVEN_NATIONAL_LABORATORY\SF070003\200-PROJEXEC\280-SPEC\16741.doc

THIS PAGE INTENTIONALLY LEFT BLANK

SECTION 16999

ELECTRICAL ACCEPTANCE TESTS

PART 1 2. AND 3. COMBINED

1.1 SUMMARY

A. Description of Systems
   1. Furnish all labor, materials, test equipment, and technical supervision to perform and record the electrical tests as specified, and perform and record all electrical tests as required, including tests on medium voltage wire and cable, 600 volt wire and cable, switchgear, unit substations, distribution transformers, rotating equipment, busways, motor control centers, control devices, grounding, special service systems, relays, and transformer insulation liquids, unless otherwise specified.
      a. Preliminary inspections and tests. Visual inspections of electrical equipment, wire checks of factory wiring and any other preliminary work required to prevent delays during performance of electrical acceptance tests.
      b. Electrical acceptance tests. Those inspections and tests required to show that the workmanship, methods, inspections, and materials used in erection and installation of the electrical equipment conforms to accepted engineering practices, IEEE ICEA and NEMA Standards, the National Electrical Code, National Electric Testing Association (NETA) Specifications, manufacturers instructions, and 16000 Series SECTIONS, and to determine that the equipment involved may be energized for operational tests.
      c. Operating tests. Those tests performed on all electrical equipment installed under 16000 Series SECTIONS, and under other SECTIONS, to show that the electrical equipment will perform the functions for which it was designed.
   2. Furnish all labor, materials, test equipment and technical supervision to perform and record the electrical test as specified for the Chilled Water and Instrument Air System Control Panels including site presence during PLC control system commissioning by the PLC Programming Consultant under a separate contract with the owner.
   3. Testing organization shall meet federal OSHA criteria for accreditation of testing laboratories, Title 29, Part 1910.7.

B. Related Work Specified Under Other Sections
   1. Refer to SECTION 16025.
   2. Operating tests on mechanical and electrical equipment installed under other SECTIONS to prove capability of such equipment to perform as specified in the SECTION covering specific equipment.
   3. Repair or replacement of equipment installed under other SECTIONS and not meeting acceptance tests specified in this SECTION and therefore not acceptable.
   4. Uncoupling of motors installed under other SECTIONS where reverse rotation could damage equipment during acceptance tests for proper rotation.

1.2 FINAL ACCEPTANCE

A. Final acceptance of electrical equipment will not only depend on equipment integrity as determined by the electrical acceptance test, but will also depend on complete operational tests, whether performed under this or other SECTIONS.

1.3 TEST REPORT SUBMITTALS

A. *Test reports [T]:* Submit, including complete data on actual readings taken and corrected values, to the ARCHITECT-ENGINEER for approval after each test period. Have all test reports signed by the authorized witnesses present at tests prior to submission. Do not energize any equipment or material for operating tests until test data has been approved. Refer to SECTION 01340 for requirements regarding submittals.

1.4 RECORD DOCUMENTS

A. Submit, per SECTION 01720, the final approved test reports to the OWNER at the completion of the work under this SECTION.

1.5 ENVIRONMENTAL REQUIREMENTS

A. Humidity
   1. Do not perform megger or high potential tests during times of high relative humidity.

B. Weather
   1. Do not perform tests on outdoor equipment during inclement weather. Do not perform tests on direct burial bare ground conductors or on ground rods within a 48 hour period following rainfall.

1.6 PROTECTION OF PERSONNEL

A. During cable tests, station a man at each point where cable has exposed connections.

1.7 SCHEDULING OF TESTS

A. Perform all acceptance and operating tests in the presence of the ARCHITECT-ENGINEER.

B. Schedule sequence of tests so that equipment can be energized immediately after completion of the applicable tests and approval of test reports. Notify the ARCHITECT-ENGINEER of time of test at least 48 hours prior to testing.

C. Notify vendors and manufacturers of electrical equipment of the time of tests and extend reasonable cooperation to them or their representatives to permit them to witness tests should they so request. Obtain list of manufacturers of OWNER furnished equipment from the ARCHITECT-ENGINEER.

1.8 GENERAL TESTING REQUIREMENTS

A. Preliminary Work
   1. Perform preliminary inspections and tests immediately prior to performing acceptance tests. Fuses and protective devices, such as circuit breakers and cable limiters, shall be omitted from cable tests and tests involving cables.

B. High Potential Tests
   1. Do not perform more than one high potential test on any conductor unless specifically authorized by the ARCHITECT-ENGINEER.

C. Megger Tests
   1. Megger readings specified are the minimum readings desired at an ambient temperature of 60 degF (15.56 degC) and at a low relative humidity. When megger readings are taken at other than 60 degF, convert readings to equivalent values at 60 degF.
   2. When megger readings fall below the specified minimum values at 60 degF, devise some means of applying heat for the purpose of drying out the equipment subject to the approval of the ARCHITECT-ENGINEER. If drying is to be done by applying an electric potential to a piece of equipment, do not exceed the continuous voltage or current ratings of the equipment being dried, either directly or by induction.

D. Continuity Tests
   1. Perform continuity tests with a DC type device using a bell or buzzer. Do not use phones for continuity test; use phones only for communication.

1.9 TESTS ON 15 KV POWER CABLES

A. General
   1. Give each 15 KV cable a high potential test after all splices and permanent connections are made, except as otherwise specified, and a dielectric absorption test before and after the high potential test. Check continuity and phase identification for each cable.

B. Connections
   1. Isolate cable by opening switches or breakers at each end of cable prior to testing, except where cables are directly connected without disconnecting means, disconnect and fan out cable. Feeder cables looped between each piece of equipment shall have each segment tested individually. Apply high potential and dielectric absorption tests between each conductor and ground with the other two conductors, its shield, lead sheath, conduit or armor grounded to the same ground. Test each conductor in the same manner. Do not include building steel as a necessary part of the test ground circuit.

C. Dielectric Absorption Tests
   1. Use a 2500 volt megger for each dielectric absorption test. Continue each test for a time sufficient to charge the cable. Take megger readings every 15 seconds during the first three minutes and at one minute intervals thereafter. Continue test until three equal readings one minute apart are obtained. Megger readings taken during the second test, after the high potential test, must be reasonably parallel with those of the initial test to show no evidence of injury to the cable during the high potential test.

D. High Potential Tests
   1. Apply a DC test voltage equal to 80% of the factory DC test voltage on each conductor, except when testing interlocked armor cable do not apply a test voltage greater than 75% of factory DC test voltage. Nominal test voltages for 15 KV cable are 65 KV DC for 133% insulation level.
   2. Apply the test voltage uniformly and gradually during the first minute with the initial application being not greater than the rated voltage of the cable. Continue test for a total duration of ten minutes.
   3. During the DC high potential tests, take leakage current readings at 30 second intervals during the first two minutes of the test and at one minute intervals during the remainder of the test. If, after the first minute, the leakage current increases, stop the test. Do not make further tests without the approval of the ARCHITECT-ENGINEER. No test will be accepted where there is a continual increase in leakage current throughout the test.

E. Acceptance
   1. The cable must withstand the specified high voltage without breakdown, have steady or decreasing leakage current during the high potential test and have satisfactory comparable megger readings in each megger test.

F. Records
   1. Include the following information in test report on each cable:
      a. Complete identification of cable, including approximate length.
      b. Megger readings versus time data, including converted values.
      c. High potential versus time data.
      d. Leakage current versus time data.
      e. Approximate average cable temperature.

1.10 TESTS ON POWER CABLE IN 4160 VOLT SERVICE

A. General
   1. Give each power cable a continuity test and a megger test after all splices and permanent connections are made. Check phase identification for each cable.

B. Connections
   1. Isolate cable by opening switches or breakers at each end of cable prior to testing, where such disconnecting means exists. Where cables are direct connected without disconnecting means, do not disconnect cables; test as connected.

C. Megger Tests
   1. Use a 2500 volt megger for each megger test.
   2. Apply megger tests between each conductor and ground with the other two conductors, its shields, and conduit or armor grounded to the same ground. Test each conductor in the same manner. Do not include building steel as a necessary part of the test ground circuit.
   3. Minimum acceptable reading. For disconnected cables, 100 megohms; for connected cables, 5 megohms.
   4. Record all megger readings. Testing of cables having megger readings markedly lower than average, even though meeting minimum requirements, shall be stopped and await further instructions from the ARCHITECT-ENGINEER.

D. Acceptance
   1. Cable must pass all tests.

E. Records
   1. Include the following in test report on each cable:
      a. Complete cable identification and description of isolation means.
      b. Megger readings, including converted values and ambient temperature at time of test.
      c. Approximate average cable temperature.

1.11 TESTS ON WIRE AND CABLE IN 480 VOLT AND LOWER SERVICE

A. General
   1. Give each 480 volt power feeder and subfeeder cable a continuity test and a megger test. Verify phase identification for each power feeder and subfeeder cable. Verify identification of all lighting circuits and 120 volt circuits on panel directories and make operational checks on all lighting circuits and 120 volt circuits to prove that the circuits perform all functions for which they are designed. Check all power feeder and subfeeder cable connections for workmanship and conformance with standard practice by visual inspection.

B. Connections
   1. Isolate power cables to be megger tested by opening switches or breakers at each end of cable prior to testing where such disconnecting means exists. Where cables are direct connected without a disconnecting means, do not disconnect cables; test as connected after verifying that the connected equipment can safely withstand the applied test voltage.

C. Megger Tests
   1. Use a 1000 volt megger for each megger test.
   2. Apply megger tests between each conductor and ground with the other two conductors in the conduit or cable grounded to the same ground. Test each conductor in the same manner.
   3. Minimum acceptable reading. For disconnected cables, 100 megohms; for connected cables, 1 megohm if conductor size is No. 14 or No. 12 AWG; 250,000 ohms for conductors No. 10 and larger.
   4. Record all megger readings. Testing of cables having megger readings lower than average, even though meeting minimum requirements, shall be stopped and await further instructions from the ARCHITECT-ENGINEER.

D. Acceptance
   1. Cable must pass all inspections and tests.

E. Records
   1. Include the following information in test report on each 480 volt power cable:
      a. Complete cable identification and description of isolation means.
      b. Megger readings, including converted values.
      c. Approximate average cable temperature.

1.12 TESTS ON CONTROL WIRING

A. General
   1. Give each single conductor and multi-conductor control wire or cable a continuity test and an insulation strength test. Verify identification of conductors.

B. Connections
   1. Disconnect and fan out conductors to be tested.

C. Insulation Strength Tests
   1. Subject each control wire to a 1000 volt, 60 hertz test.
   2. Apply test between each conductor in a wire group and ground with all other conductors in the wire group grounded to the same ground. Use a test set having an accurate means of insuring 1000 volt test voltage and provide a series resistance to limit fault when a ground is found. Hold test voltage only long enough to read instruments. Test each conductor in the same manner.
   3. In lieu of the above insulation strength test, megger each control wire as specified for 480 volt power conductors.

D. Acceptance
   1. Wires must pass all tests.

E. Records
   1. Include the following information in test report on each wire group.
      a. Wire and group identification.
      b. Type of test, insulation strength or megger.
      c. When megger testing is selected, include information as specified for 480 volt power cables.

1.13 TESTS ON UNIT SUBSTATION TRANSFORMERS

A. General
   1. Check and test ground connections per TESTS ON GROUNDING Article hereinafter. Check continuity and correctness of all windings and check tap settings for compliance with reviewed shop drawings. Give each transformer winding a high potential test and a megger test both before and after the high potential test.

B. Connections
   1. Isolate transformer by opening primary switch and transformer main secondary breaker. Tie conductors together on each winding. Remove fuses on potential transformers, and short and ground secondaries of all current transformers.

C. Megger Tests
   1. Use a 2500 volt megger for megger tests on 15 KV class 7.2 KV class, and 5 KV class windings and a 1000 volt megger for megger tests on 480 volt windings.
   2. Apply a megger test between each transformer winding tied together and ground. Ground all windings and breaker contacts not included in the test to the same ground.

3. Hold all 2500 volt megger tests for at least five minutes and until three consecutive readings one minute apart are obtained. Take readings every 30 seconds during the first two minutes and every minute thereafter.
4. Hold all 1000 volt megger tests until the reading reaches a constant value and until three consecutive equal readings one minute apart are obtained.
5. Minimum acceptable readings are as listed below. Megger readings taken after the high potential tests must be reasonably parallel with those of the initial test to show evidence of injury to the transformer during the high potential test.

Equipment	Minimum Megger Reading-Megohms
35 KV class primary winding	2000
25 KV class primary winding	1000
15 KV class primary winding	800
7200 volt winding	200
4800 volt winding	100
4160 volt winding	100
2400 volt winding	100
480 volt winding	50

D. High Potential Tests
1. Apply the following 60 hertz test voltages, unless advised otherwise by the manufacturer, for specific voltage windings for one minute:

Equipment	Test Voltage
35 KV class primary winding	50 KV; verify with manufacturer
25 KV class primary winding	37 KV; verify with manufacturer
15 KV class primary winding	23 KV; verify with manufacturer
7200 volt winding	14KV
4800 volt winding	9KV
4160 volt winding	9KV
2400 volt winding	7.5 KV
480 volt winding	3.0 KV

2. Apply the test voltage uniformly and gradually with the initial application being no greater than the rated voltage of the winding.

E. Acceptance
1. The transformers must pass all inspections and tests, withstand the specified high potential test voltage without breakdown, and have satisfactory comparable megger readings in each megger test.

F. Records
1. Include the following information in test report on each transformer:
   a. Complete transformer identification.
   b. High potential versus time data.
   c. Megger readings versus time data including converted values.
   d. Approximate average transformer temperature.

1.14 TESTS ON MEDIUM VOLTAGE SWITCHGEAR

A. General

1. Check and test all ground connections per TESTS ON GROUNDING Article hereinafter. Give each breaker a megger test. Give each bus a high potential test and a megger test both before and after the high potential test. Perform operational tests on switchgear, relays, breakers and control devices. Perform ratio and polarity tests on all instrument transformers and give each potential transformer a megger test. Give each current transformer secondary a megger test. Perform tests on relays per TESTS ON RELAYS Article hereinafter.

B. Connections

1. Prior to performing any test on main bus, isolate bus to be tested by racking out all breakers, short and ground current transformer secondaries, remove potential transformer primary fuses and ground housing.
2. Perform high potential and megger tests on breakers in the withdrawn position.

C. Megger Tests

1. Apply megger tests on switchgear bus and breakers between each phase and ground with the other phases grounded to the same ground.
2. Apply megger tests on potential transformers between each winding and ground with windings not under test grounded to the same ground.
3. Apply megger tests on current transformer secondaries and associated wiring between all phases tied together and ground.
4. Hold all 2500 volt megger tests at least 5 minutes and until three consecutive equal readings one minute apart are obtained. Take readings every 30 seconds during the first two minutes and every minute thereafter.
5. Hold all 1000 volt megger tests until the reading reaches a constant value and until three consecutive equal readings one minute apart are obtained.
6. Minimum acceptable megger readings and megger voltages are as listed below. Megger readings taken after the high potential tests must be reasonably parallel with those of the initial test to show no evidence of injury to the equipment during the high potential test.

Equipment	Megger Volts	Minimum Megger Reading in Megohms
Main buses	2500	50
Breakers	2500	100
Potential transformer primary winding	2500	50
Current and potential transformer secondary winding	1000	5

D. High Potential Tests

1. Apply high potential tests on main bus between each phase and ground with the other phases grounded. Test each phase in the same manner.

2. Apply the following 60 hertz test voltages, unless advised otherwise by the manufacturer, for specific voltage equipment for one minute:

Equipment	High Potential Test Voltage
35 KV class bus	50 KV; verify with manufacturer
25 KV class bus	37 KV; verify with manufacturer
15 KV class bus	23 KV
7200 volt bus	14 KV
4800 volt bus	9 KV
4160 volt bus	9 KV
2400 volt bus	7.5 KV

E. Instrument Transformer Ratio Tests
1. Perform ratio tests on each potential transformer with proper voltmeters and approximately normal secondary burden connected.
2. Perform a two point ratio test on each current transformer applying one-half and rated primary current to the primary of the transformer and measuring both primary and secondary currents for each point. For high ratio transformers, primary current may be reduced to capabilities of test equipment available but no lower than 500 amperes.

F. Operational Tests On Each Breaker
1. Inspect each breaker mechanism for correct alignment, freedom from binding, and good contact.
2. Check each breaker for ease of rack-in and rack-out. Check interlocking to determine that the breaker cannot be racked-out-of or into the operating position with the main contacts closed. Check position indicating target operation.
3. Operate each breaker through three open-close-open cycles in both the operating and test position by both manual and automatic operation as follows:
   a. Manually operate the breaker from both the local switchgear mounted control switch and remote control switches, if applicable. Observe indicating lights and position indicating target for correct operation.
   b. Manually close each breaker by control switch and trip automatically. Observe indicating lights, alarms and targets for proper operation, including remote devices if applicable.
   c. Where individual breakers are electrically interlocked for automatic closing or opening of another breaker, operate breakers to determine that operation is proper.

G. Acceptance
1. The equipment must pass all inspections and tests, withstand the specified high potential test voltage without breakdown, and have satisfactory comparable megger readings in each megger test.

H. Records
1. Make complete and accurate records of each test. Include the following in each test report:
   a. Megger readings versus time data, including converted values and ambient temperature at time of test.
   b. Voltage and current readings on instrument transformer ratio tests.
   c. High potential versus time data on bus.

1.15 TESTS ON 480 VOLT SWITCHGEAR

A. General
   1. Check and test all ground connections per TESTS ON GROUNDING Article hereinafter. Give each breaker and bus a megger test. Perform operational tests on switchgear, relays, breakers and control devices. Perform ratio and polarity tests on all instrument transformers and give each potential transformer a megger test. Give each current transformer secondary a megger test. Perform tests on relays, overcurrent trip devices and ground fault relays per TESTS ON RELAYS Article hereinafter.

B. Connections
   1. Prior to performing megger test on main bus, isolate bus to be tested by racking-out breakers, short and ground current transformer secondaries, remove potential transformer primary fuses, and ground housing.
   2. Perform megger tests on breakers in the withdrawn position.

C. Megger Tests
   1. Apply megger tests on switchgear bus and breakers between each phase and ground with the other phases grounded to the same ground.
   2. Apply megger tests on potential transformers between each winding and ground with windings not under test grounded to the same ground.
   3. Apply megger tests on current transformer secondaries and associated wiring between all phases tied together and ground.
   4. Hold all megger tests until the reading reaches a constant value and until three consecutive equal readings one minute apart are obtained.
   5. Minimum acceptable megger readings and megger voltages are as follows:

Megger Equipment	Minimum Megger Volts	Reading-Megohms
Main buses	1000	1,000
Breakers	1000	1,000
Potential transformer primary winding	1000	1,500
Current and potential transformer secondary winding	500	1,500

D. Instrument Transformer Ratio Tests
   1. Perform ratio tests on each potential transformer with proper voltmeters and approximately normal secondary burden connected.
   2. Perform a two point ratio test on each current transformer applying one-half and rated primary current to the primary of the transformer and measuring both primary and secondary currents for each point. For high ratio transformers, primary current may be reduced to capabilities of test equipment available but no lower than 500 amperes.

E. Operational Tests On Each Breaker
   1. Inspect each breaker for correct alignment, freedom from binding, and good contact.
   2. Check each breaker for ease of rack-in and rack-out. Check interlocking to determine that the breaker cannot be racked-out-of or into operating position with the main contacts closed. Check position indicating target operation.

3. Operate each breaker through three open-close-open cycles in both the operating and test position by both manual and automatic operation if applicable, as follows:
    a. Manually operate the breaker from both the local switchgear mounted control means and remote control switches, if applicable. Observe indicating lights and position indicating target for correct operation as applicable.
    b. Manually close each breaker by the local switchgear mounted control means and trip automatically. Observe indicating lights, alarms, and targets for proper operation, including remote devices if applicable.
    c. Where individual breakers are electrically interlocked for automatic closing or opening of another breaker, operate breakers to determine that operation is proper.

F. Acceptance
1. Equipment must pass all inspections and tests.

G. Records
1. Make complete and accurate records of each test. Include the following in each test report:
    a. Megger readings versus time data, including converted values and ambient temperature at time of test.
    b. Voltage and current readings on instrument transformer ratio tests.

1.16 TESTS ON DISTRIBUTION TRANSFORMERS

A. General
1. Check continuity and correctness of connections of windings and give each winding a megger test.

B. Connections
1. Isolate transformer by opening the line side switch or circuit breaker and disconnect secondary conductors at panels. Tie conductors together on each winding.

C. Megger Tests
1. Apply 1000 volts for megger tests on 480 volt windings and 500 volts megger tests on lesser voltage windings.
2. Apply a megger test between each transformer winding tied together and ground. Ground all windings not included in the test to the same ground.
3. Minimum acceptable readings. 480 volt winding to ground, 45 megohms; lesser voltage winding to ground, 30 megohms.
4. Hold all megger tests for at least one minute or until the reading maintains a constant value for 15 seconds.

D. Acceptance
1. Transformers must pass all inspections and tests.

E. Records
1. Make complete and accurate records of each test. Include the following in each test report:
    a. Complete identification of transformer.

b. Megger readings, including converted values and ambient temperature at time of test.

1.17 TESTS ON ROTATING EQUIPMENT

A. General
1. Inspect all motors installed under all other SECTIONS for damage, moisture, alignment, proper lubrication, oil leaks, phase identification and cleanliness. Check for proper rotation. Coordinate uncoupling of motors where reverse rotation would damage equipment. Give each motor a megger test.

B. Connections
1. For three phase motors, include cable back to the open starter.
2. For single phase motors, disconnect motor from service.

C. Megger Tests
1. Apply megger tests on three phase motors between all phases tied together and ground, with motor at ambient temperature.
2. For single phase motors, apply megger test between phase and neutral conductor tied together and ground, with motor at ambient temperature.
3. Hold all megger tests for one minute or until the reading maintains a constant value for 15 seconds.
4. Minimum acceptable megger readings and megger voltage are listed below:

Equipment	Megger Volts	Minimum Megger Reading-Megohms
4000 volt, 3 phase induction motor	2500	100
2300 volt, 3 phase induction motor	2500	100
460 volt, 3 phase induction motor	1000	20
230 volt, 3 phase induction motor	500	20
200 volt, 3 phase induction motor	500	20
115 volt, 1 phase induction motor	500	5

D. Operating Tests
1. Run motor long enough to prove satisfactory performance including operating temperature, lubrication, vibration.

E. Acceptance
1. Motor must pass all inspections and tests.

F. Records
1. Make complete and accurate records of all tests and inspections. Include the following in each test report:
   a. Megger readings, including converted values.
   b. Ambient temperature at time of test.

1.18 TESTS ON 480 VOLT BUSWAYS

A. General
   1. Inspect busway installation for conformance to design specifications and installation workmanship. Give each busway a megger test.

B. Connections
   1. Isolate busway by opening supply switch or breaker, and opening load disconnecting means. Include cable back to the supply switch or breaker in test.

C. Megger Tests
   1. Apply megger tests at 1000 volts.
   2. Apply megger tests from phase to ground with the other phases to the same ground. Test each phase in a similar manner.
   3. Minimum acceptable readings. 10 megohms.

D. Acceptance
   1. Busway must pass all inspections and tests.

E. Records
   1. Include complete busway identification and megger readings, with converted values and ambient temperature at time of test.

1.19 TESTS ON MOTOR CONTROL CENTERS

A. General
   1. Give control center bus a megger test. Perform operating tests on control equipment as specified under TESTS ON CONTROL DEVICES Article hereinafter.

B. Connections
   1. For megger tests, isolate bus by opening supply switch or breaker, and opening load disconnects. Include cable back to the open supply switch or breaker.

C. Megger Tests
   1. Apply megger tests at 1000 volts.
   2. Apply a megger test between each phase and ground with all other phases grounded to the same ground. Test each phase in the same manner.
   3. Minimum acceptable readings. 100 megohms.

D. Acceptance
   1. Control center must pass megger tests and operating tests.

E. Records
   1. Make complete records of all tests; including control center identification and megger readings with converted values and ambient temperature at time of test.

1.20 START-UP AND TESTING PROCEDURE FOR CHILLED WATER AND INSTRUMENT AIR SYSTEM CONTROL PANELS

A. Detailed factory and field test procedures shall be submitted for approval at least four weeks before the actual testing begins.

B. All systems' final testing shall be coordinated with the Owner and shall take place in the presence of the Owner.

C. Closely coordinate with the various equipment/system contractors and the Owner during the test scheduling phase and provide all necessary manpower to properly execute the acceptance testing of the control panels and installation.

D. Assist in the systems' start-up and final testing by others that are under a separate contract with the owner.

E. Check-Out, Start-Up, and Commissioning
   1. Factory testing
      a. The control panels shall be factory tested prior to shipment. The factory test shall prove all wiring in the panel(s) is correct and matches the approved schematic drawings. The Contractor shall submit his recommended test procedures to the Owner for review and concurrence at least four weeks in advance of the scheduled test date. The Contractor shall notify the Owner at least two weeks before the beginning of the test. The Owner may witness and actively participate in the test.
      b. The PLC Programming Consultant will provide a copy of the PLC and HMI program to the Contractor for use in conducting the control panel factory acceptance tests.
      c. Minimum factory test requirements shall be:
         1) The Contractor shall, prior to beginning the test, "ring out" all panel wiring and panel interconnecting wiring in the presence of the Owner to substantiate that all wiring is correct. This shall consist of the following:
            a) Verify panel construction meets specifications, and wiring agrees with approved drawings.
            b) Each input point shall be simulated at the terminal strip of each PLC panel. Observe that the PLC acknowledges the change of state.
            c) Each output signal shall be forced through the programming terminal. Test the PLC outputs signal at the I/O terminal strip for the appropriate digital voltage at each PLC panel.
            d) Each analog input point shall be simulated at the terminal strip of each PLC panel. Observe that the analog signal change is received by the PLC.
            e) Simulate data communications between the PLC and auxiliary devices. All data communications modules shall be adequately tested.
            f) Simulate communication to and from intelligent modules within the input/output structure. Where required by the module application, calculations by the module shall be proven.
            g) All control fuses shall be checked for correct size and fuse type in accordance with the specifications.

2) All operator interface equipment shall be included as part of the factory test to verify proper operation of the interface equipment.

d. The Contractor shall supply all personnel, equipment, and facilities at the factory site to properly conduct the test. The testing period shall continue until the Contractor and the Owner have mutually agreed that the test is acceptable.

2. Field Testing

a. The Plant Control system commissioning effort shall be completed by the Contractor in the presence of the Owner. The Contractor shall, as a minimum, complete the following procedures as part of the commissioning effort:

1) In verifying loop completeness, the Contractor shall perform the following physical checks:

a) Each loop shall be continually tested completely from start to finish including all remote devices.

b) Each wire in a loop shall be verified at each end for correct termination and wire number labeling.

c) All contacts within a loop shall be verified for correct contact sense, NO or NC.

d) Each junction of an analog loop shall be checked for correct polarity and grounding continuity.

e) All control loops shall be checked for grounding potential.

f) The Contractor shall verify all wiring within loops for correct size, type, and color.

2) Upon verification of wiring, the Contractor shall perform the following "hot tests:"

a) All analog devices shall be set and calibrated to the appropriate zero, mid-point and span.

b) All devices shall be checked that correct device, model number, range, ect., was installed.

c) All local pushbutton stations shall be exercised to assure functioning of local devices.

d) Upon an incorrect or absent signal, either discrete or analog signal to the PLC and HMI (LMI) systems, the Contractor shall measure the signal starting at the primary element and continuing through each junction to identify where loss of signal occurs.

3. Commissioning

a. The Plant Control system commissioning effort shall be completed by the PLC Programming Consultant in the presence of the Owner. The Contractor shall be present in support of the Consultant during the commissioning process.

b. Before proceeding with any system start-up and testing, the PLC Programming Consultant shall submit a start-up procedure for approval by the Owner and confirm that preliminary testing has taken place and equipment/system is ready for automatic operation. Detailed field test procedures shall be submitted for approval at least 60 days before the actual testing begins.

c. All systems' start-up and final testing shall be coordinated with the Owner and shall take place in the presence of the Owner.

d. Conduct the systems' start-up and final testing per approved start-up procedures. Make available, to all parties required to be present for the start-up, copies of the approved start-up procedure.

e. Closely coordinate with the various equipment/system contractors and the Owner during the scheduling phase and provide all necessary manpower to properly execute the systems' start up and acceptance testing of the systems.

f. The Consultant shall, as a minimum, complete the following procedures as part of the commissioning effort:

1) Verify that all of the control sequences as defined in the software will respond with the proper output when changing process conditions are simulated.

2) Completely check all control loops in the presence of the Owner. Loops shall be defined as, but not limited to:

a) Motor control logic.
b) Local control logic.
c) Analog control logic.
d) Discrete input to the PLC.
e) Analog input to the PLC.
f) Discrete output from the PLC.
g) Analog output from the PLC.

3) Upon verification of wiring, the Consultant shall perform the following "hot tests":

a) All analog devices shall be measured at point of final termination at the following ranges: 0, 25, 50, 75, 100 percent, with actual measured value recorded.

b) All discrete sensor switch points to be verified according to selected settings, including deadband resets.

c) All loops shall be measured for correct current and appropriate voltage level on DC power supply.

d) All local control logic shall be energized and checked by forcing process conditions to set points to assure proper shutdown by any safety devices.

e) All discrete indication to the PLC and HMI (LMI) systems shall be checked to appropriate I/O points and all indication of such points on all operator interface operation displays.

f) All analog systems shall be forced by process conditions through the range as specified to check response from the element through the PLC and HMI systems.

g) PLC and HMI interface outputs to field elements shall be tested in the following manner:

- All discrete outputs shall be forced manually through the operator interface. Each field device shall be measured for correct voltage and fully motion checked. Valves shall be fully stroked, and motors run to prove operation.
- All discrete outputs shall be stopped by local stop button. Local stops shall be then reset to assure PLC logic properly reset.
- All analog outputs shall be forced through thru operator interface at each level: 0, 25, 50, 75 and 100 percent. At each level, the signal shall be measured at each device in the loop and this measured value recorded through the final field element.

- The final element in an analog loop shall be tested to assure proper reaction to analog signals. The Consultant shall adjust these elements as necessary to achieve proper performance.

F. Acceptance
   1. Control panels and circuitry must pass all tests to prove that all design functions are satisfactorily performed, including manual and automatic operation and interlocking.

G. Records
   1. Make complete records of all tests.

1.21 TESTS ON CONTROL DEVICES

A. General
   1. Perform operating tests on all control, alarm or indicating devices installed under DIVISION 16000 Series SECTIONS.

B. Connections
   1. Include motors and protective control devices in test circuitry where operation of motors will not damage attached equipment.
   2. Where equipment could be damaged by energizing motors, disconnect motor leads at the load side of starters.
   3. Jumper or disconnect, as applicable, control devices installed under all other Sections as necessary to permit testing those devices and circuitry installed under 16000 Series SECTIONS.
   4. Coordinate these connections and tests with the trade responsible for the installation of motors.

C. Acceptance
   1. Control devices and circuitry must pass all tests to prove that all design functions are satisfactorily performed, including manual and automatic operation and interlocking.

D. Records
   1. Make complete records of all tests.

1.22 TESTS ON GROUNDING

A. General
   1. Inspect ground conductors and connections for conformance with design specifications and for satisfactory workmanship. Test resistance to earth of each ground rod and each ground grid.

B. Connections
   1. Maintain each ground rod isolated from the associated ground grid for tests on individual rods for resistance to earth.
   2. Include associated ground rods and interconnecting wiring in tests on each grid system for resistance to earth.

C. Tests On Individual Ground Rods
   1. Test each ground rod for resistance to earth by a standard method. Use a Biddle ground tester or the method of using two auxiliary ground rods as described in IEEE Standard No. 118, paragraph 5.5.2. The IEEE method requires the use of AC test current. Place auxiliary test rods sufficiently far away from the rod under test so that the regions in which their resistance is localized do not overlap. Calculate ground resistance from the readings taken. Maximum acceptable resistance to earth. 25 ohms.
   2. If the resistance is found to be higher than 25 ohms, drive additional rods with a minimum separation of 10 feet and connect in parallel with the rod under test until 25 ohms or less is obtained, or increase the length of the rod under test until 25 ohms maximum is obtained.

D. Tests On Each Ground Grid
   1. Test each isolated ground grid as specified for maximum acceptable resistance to earth of five ohms. In tests on total ground systems, the maximum acceptable resistance to earth is two ohms.

E. Acceptance
   1. Grounding materials and connections must pass all inspections and must meet all specified maximum and minimum values.

F. Records
   1. Make complete records of all tests. Include resistance values obtained, calculations of same, and methods of test and calculation.

1.23 TESTS ON SPECIAL SERVICE SYSTEMS

A. Perform operating tests on all special service systems to prove that all design functions are satisfactorily performed.

1.24 TESTS ON RELAYS

A. General
   1. Consult with the Owner on securing the services of a reputable firm acceptable to the OWNER to determine the settings on all protective relays, overcurrent trip devices and ground fault relays on switchgear installed under 16000 Series SECTIONS, including OWNER-furnished switchgear, to set all relays and devices to perform properly in the electrical system indicated, to coordinate the work with the utility serving the site, and to perform automatic operation tests as specified in Article “TESTS ON HIGH VOLTAGE SWITCHGEAR” hereinbefore and Article “TESTS ON 480 VOLT SWITCHGEAR” hereinbefore as applicable.
   2. Do not remove any protective relay from its case without the prior approval of the ARCHITECT-ENGINEER.
   3. Perform all automatic operation tests on switchgear breakers with all breakers and other equipment in the switchgear in normal operating position and with only temporary control power applied to the control bus where a control bus is provided. Do not energize main buses with rated potentials, unless otherwise specified. Set relays and devices per recommended relaying requirements.

B. Protective Overcurrent Relays
   1. Apply test currents to current transformer secondary terminals with all secondary wiring connected and test switches normal.
   2. Test time overcurrent element for minimum pickup current and approximate time lapse from test current application to breaker trip. Verify pickup and time values with relaying requirements.
   3. Test instantaneous element for minimum pickup value. Verify pickup value with relaying requirements.
   4. Test time overcurrent element at five times minimum pickup current.

C. Protective Undervoltage Relays
   1. Apply test voltage to potential transformer secondary terminals with all secondary wiring connected and test switches normal.
   2. Test time undervoltage element for minimum dropout voltage and approximate time lapse from voltage depression to breaker trip. Verify dropout and time values with relaying requirements.

D. Overcurrent Trip Devices
   1. Apply test currents to low voltage breaker bus connections at rear of switchgear.
   2. Test long and short time elements for minimum pickup current and approximate time lapse from test current application to breaker trip. Verify pickup and time values with relaying requirements.
   3. Test instantaneous element for minimum pickup value. Verify pickup value with relaying requirements.
   4. Test long time element at 2 and 3 times minimum pickup current.

E. Ground Fault Protection Devices
   1. Perform tests on zero sequence type ground relays energized from toroid current transformers with test currents equal to normal current on the phase conductor at the low voltage breaker.
   2. Insert an additional wire (test conductor) through the toroid and apply unbalancing test current to the test conductor, increasing the current until the minimum unbalance current to trip the breaker is obtained. Verify pickup and time values with relaying requirements.

F. Acceptance
   1. Relays and devices must pass all tests for conformance with relaying requirements.

G. Records
   1. Make complete and accurate records of each test. Include the following in each test report:
      a. Complete identification of each breaker, relay and device associated.
      b. Final set points on all equipment, to agree with relaying requirements.

1.25 TESTS ON TRANSFORMER INSULATING LIQUIDS

A. General
   1. Clean all liquid-filled transformers including OWNER-furnished transformers, with particular care for valves, plugs, gauges, thermometers, relief diaphragms, breathers, tap

changers, bushings, fans, air vents, etc., and check for leaks and broken parts. Check liquid levels in all tanks. Perform dielectric strength tests on liquid prior to energization of transformer and again after the transformer has been continuously energized for a period of four days.

B. Liquid Level Checks
   1. Verify that liquid levels are within required tolerance limits. Add liquid to transformers furnished under this CONTRACT. Inform the ARCHITECT-ENGINEER of any low levels in OWNER-furnished equipment and await direction. Do not add liquid to OWNER-furnished equipment without the approval of the ARCHITECT-ENGINEER. Furnishing of additional liquid for OWNER-furnished equipment is not part of this CONTRACT.
   2. Where liquid must be added to transformers furnished or installed under this CONTRACT, check the underside of the manhole cover for condensation. Remove all condensation prior to adding liquid. Add only liquid identical to existing liquid as approved by the ARCHITECT-ENGINEER.
   3. Final check liquid levels when liquid temperature reaches 25 degC.

C. Test Equipment
   1. Sample Containers. 16 ounce capacity clear glass type having glass stoppers. Do not use stoppers of rubber or compositions of rubber. Prior to first use of containers in testing, rinse containers and stoppers in dry, lead-free gasoline and dry thoroughly. When thoroughly dry, wash containers and stoppers in strong soap suds, rinse thoroughly with water, and dry in an oven at 105 degC before using. Store cleaned and dried stoppered containers in a warm, dry, protected place between tests. Do not use containers for sampling more than one type of liquid without thoroughly cleaning and drying as specified.
   2. Test Set. 1/2 KVA, 35,000 volt rated portable test set, having one inch diameter electrodes in the test cup with a gap of 0.1 inch between adjacent electrode faces. Prior to first use of the test cup in testing, rinse the test cup with dry, lead-free gasoline and dry in an oven at moderate temperature. Store rinsed and dried test cup in warm, dry, protected place between tests. Do not use test cup for sampling more than one type of liquid without rinsing and drying as specified.

D. Taking Samples
   1. Immediately before drawing a sample, carefully clean each sampling valve, then open each valve, allowing sufficient liquid to drain out into a waste container to insure the removal of any moisture which may have collected in the valve. Dispose of waste liquid properly. Take samples from outdoor equipment on a clear day.
   2. Before filling any container, rinse the container three times with liquid obtained from the same sample source.
   3. Take sufficient sample liquid to perform a minimum of 5 tests. Hold filled stoppered containers in a room having an ambient temperature between 20 degC and 30 degC until sample liquid temperature has stabilized at ambient temperature. Fill each sample container with approximately equal quantities of liquid from sample valves at the top and bottom of a tank.

E. Visual Inspection
   1. Visually inspect each liquid sample to determine that the liquid is essentially clean, free from carbon, clear, contains no obvious water, and is not highly discolored.
   2. Inform the ARCHITECT-ENGINEER when visual inspection indicates liquid is not essentially clean.

F. First Dielectric Strength Tests
   1. Perform tests in the same room or ambient temperature in which samples have been held.
   2. Immediately before performing each test, rinse the test cup with the liquid to be tested.
   3. Mix the sample in the container with a swirling motion to avoid introducing air, and fill the test cup with the sample liquid to a height of not less than 0.79 inches (20 MM) above the top of the electrodes. Gently rock the cup and then allow the liquid to stand in the cup without agitation for three minutes before test voltage is applied, to allow air bubbles to escape.
   4. Apply the test voltage gradually at a rate of 3000 volts (RMS) per second until breakdown occurs, as indicated by a continuous discharge across the gap. Open the test circuit immediately after breakdown. After testing, jar the test vessel to loosen particles of carbon adhering to the electrodes, but not with sufficient force to introduce air bubbles. Empty the test cup after each test.
   5. Make one breakdown test on each of five fillings of the test cup and average the five breakdown voltages. If the average deviation from the mean exceeds 10% or if any individual test deviates more than 25% from the average, make additional tests. Determine the dielectric strength by averaging the first five tests that conform to the allowable variations.
   6. Minimum Acceptable Average Breakdown Voltage. 30 KV. If the average breakdown voltage is less than 30 KV, inform the ARCHITECT-ENGINEER that filtering is required. Filter and retest liquid in transformer tanks furnished under this CONTRACT. Do not filter and retest liquid in OWNER-furnished transformer tanks without the approval of the ARCHITECT-ENGINEER. Filtering and retesting of liquid furnished by the OWNER is not part of this CONTRACT.

G. Second Dielectric Strength Tests
   1. Four days after each piece of equipment is energized, make a second series of dielectric strength tests on each piece of equipment, observing all necessary precautions and procedures as specified.

H. Acceptance
   1. Each piece of equipment must pass all inspections and tests.

I. Records
   1. Make complete and accurate records of each test. Include the following in each test report:
      a. Complete identification of each liquid insulated equipment.
      b. Breakdown voltage on each test sample whether used in determination of average breakdown voltage or not.
      c. Calculations of average and mean values for each series of tests.

2. Approximate liquid temperature at time of each test.

END OF SECTION

Revision History	
Date	**Rev. No.**
A	0
B	0
D	0
E	0
F	0
02-19-09	0

EY/ca
C:\d\timsdatasf\BROOKHAVEN_NATIONAL_LABORATORY\SF070003\200-PROJEXEC\280-SPEC\16999.doc