E.W. Howell Co., LLC

113 Crossways Park Drive
Woodbury, NY 11797
Phone: 516-921-7100
Fax: 516-921-7920

REQUEST FOR INFORMATION
No. 00056

TITLE: Cooling Tower C-clips

DATE: 3/25/2010

PROJECT: BNL CCWF-II

JOB:

TO: Attn: Alan Raphael
Brookhaven National Laboratory
Brookhaven Sciences Associates, LLC
Project Modernization Office
Upton, NY 11973-5000
Phone: 631-344-5854

STARTED:
COMPLETED:
REQUIRED: 4/1/2010

WORK IMPACT:	SCHEDULE IMPACT:	COST IMPACT:
Unknown	Unknown	Unknown

QUESTION:

3/25/2010
Cooling Tower C-clips

The bolts that connect the cooling tower to the cooling tower platform steel are interfering with the bolts of the structural beams (please see attachment). As a solution we propose to bolt on a C-clips to the bottom of the cooling tower, rig the cooling tower in place and weld on the c-clips to the baseplate. Please advise on sizing of the c-clip.

CC: Bill Harrison, George Santorilla, File

PROPOSED SOLUTION:

ANSWER:

Proposed option of a C- section is structurally not adequate (need 1 1/4" plate on top to support cooling tower loads over 8" MC-section). Also, the proposed option may not provide adequate space for nut and washer to bear on the web of C-section (3/4" diameter anchor bolts on 4 1/2" x 5 7/8" spacings to fit inside an MC8). Contractor pointed to anchor bolt interference at the intermediate locations between the towers. However, I also discovered, for CT5, at the north-east and north-west corners, the anchor bolts fall directly on the web of the framing members

Note: Contractor selected Option #1. SK-1 through SK-3 are attached. AR 3/30/10

Attached sketches SK-1 to SK-5 identify these situations and the proposed options 1 to 3, for considerations by all. Selected option must be agreed upon by the cooling tower manufacturer.

Additional consequences of the revisions are: 1) Supply and return piping will need adjustment and 2) Cooling tower ladder may need some adjustment.

S. Muddappa / Giffels Partnership / 03-29-10

Requested By: E.W

Signed: _____
Lauren Bergin

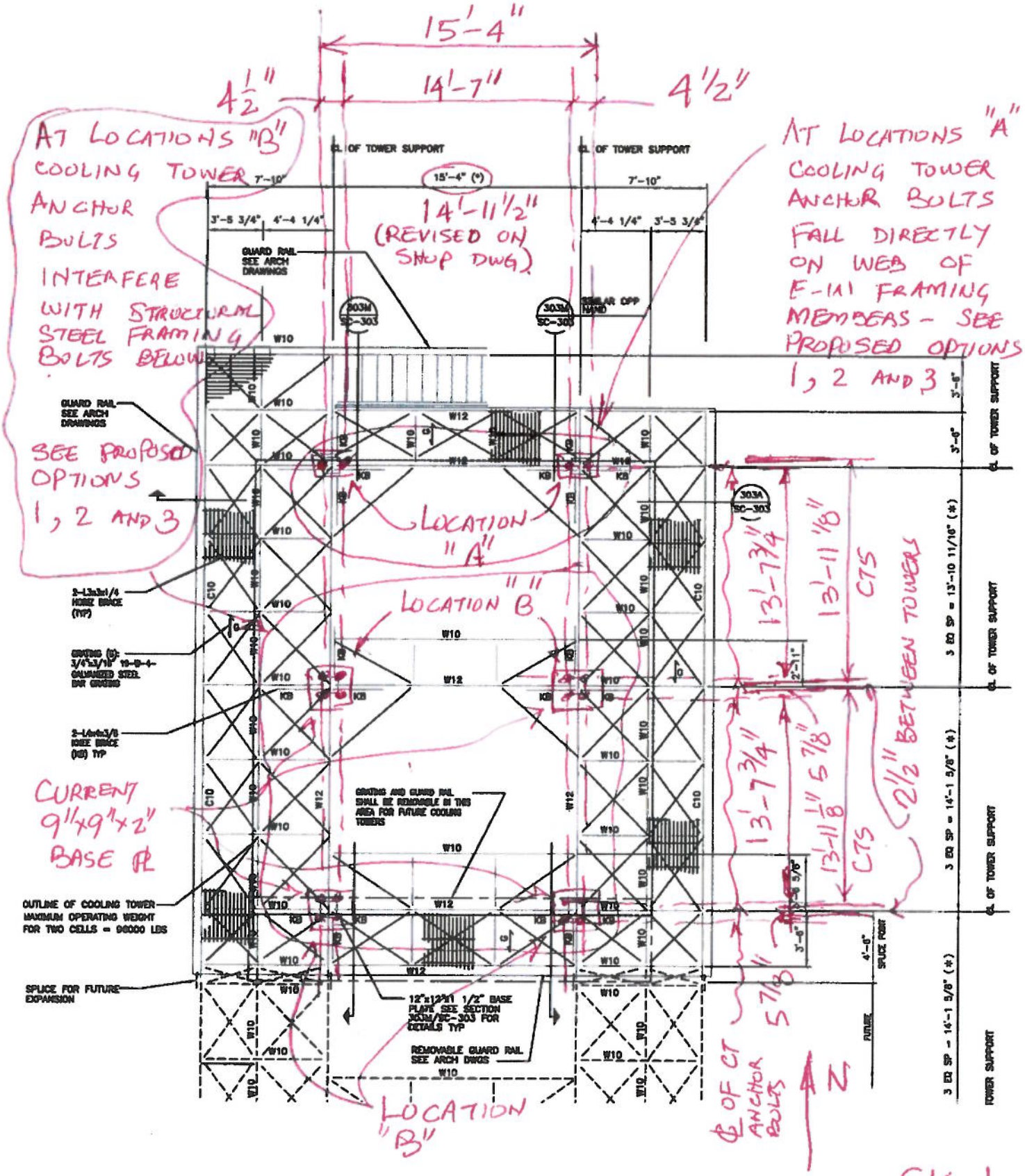

COOLING TOWER ANCHOR BOLT LAY OUT

SK-1

Giffels
Architects, Engineers & Planners

Project / Job Number	SF070003	Sheet Number	
Client	BNL		
Subject	COOLING TOWER INSTALLATION		
Made By	SM	Date	03-29-10
Reviewed By		Date	

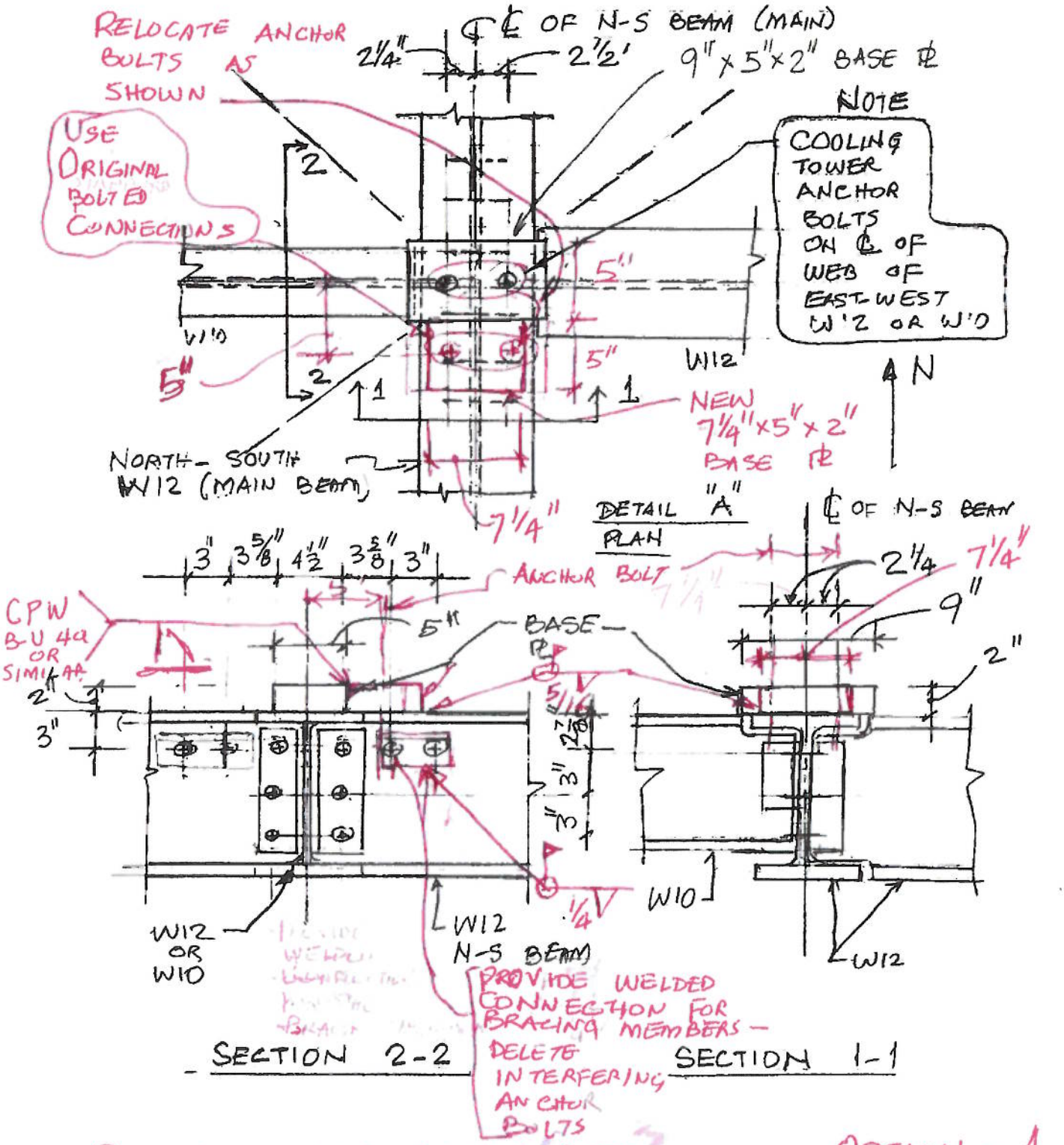

COOLING TOWER ANCHOR BOLTS AT LOCATION "A"

OPTION - 1

SK-2

Giffels
Architects, Engineers & Planners

Project / Job Number	SF070003	Sheet Number	
Client	BNL		
Subject	COOLING TOWER INSTALLATION		
Made By	SM	Date	03-29-10
Reviewed By		Date	

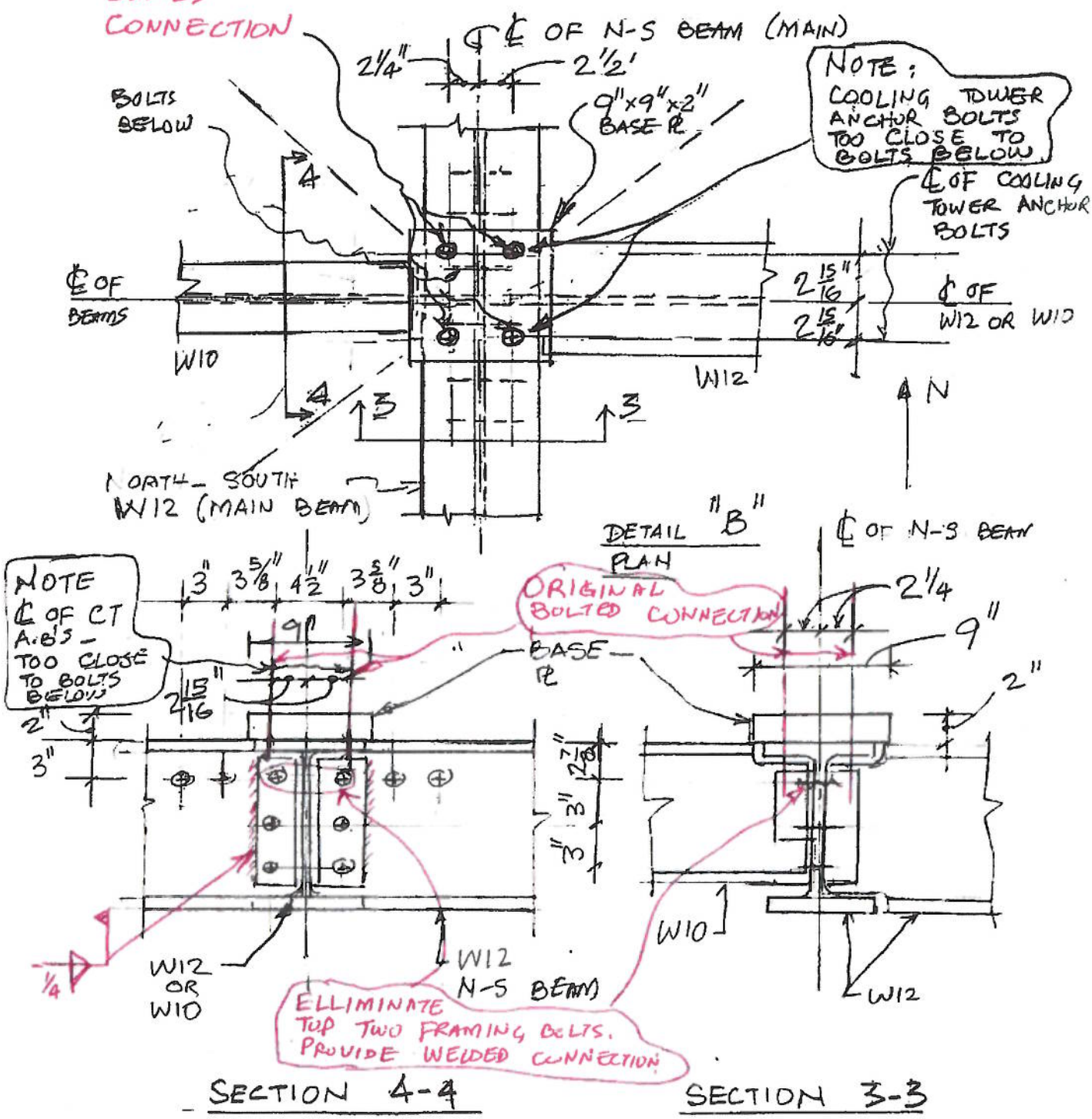

COOLING TOWER ANCHOR BOLTS AT LOCATION "B"

OPTION - 1

SK-3