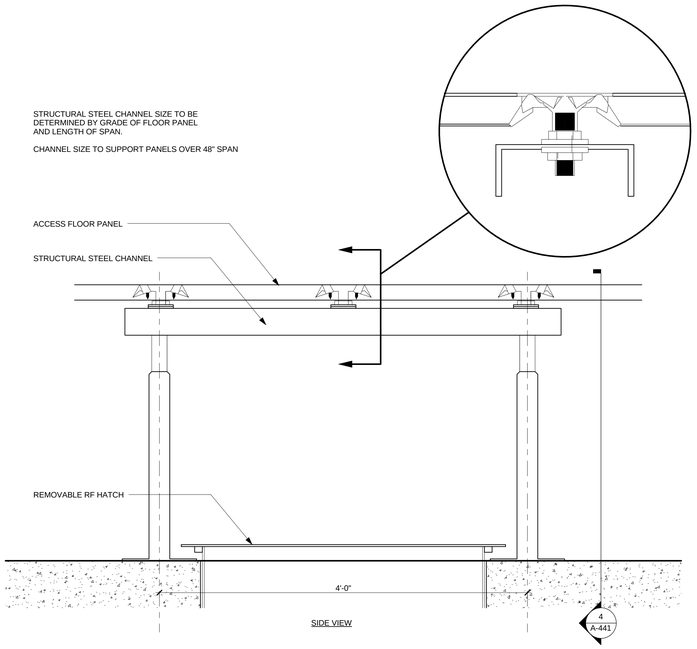

5 ULV/MBE BRIDGE DUCT ON SUBFLOOR - SIDE
1 1/2" = 1'-0"

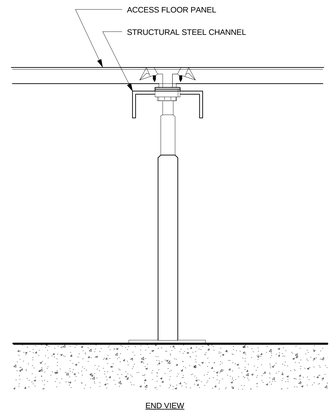

4 ULV/MBE BRIDGE DUCT ON SUBFLOOR - END
1 1/2" = 1'-0"

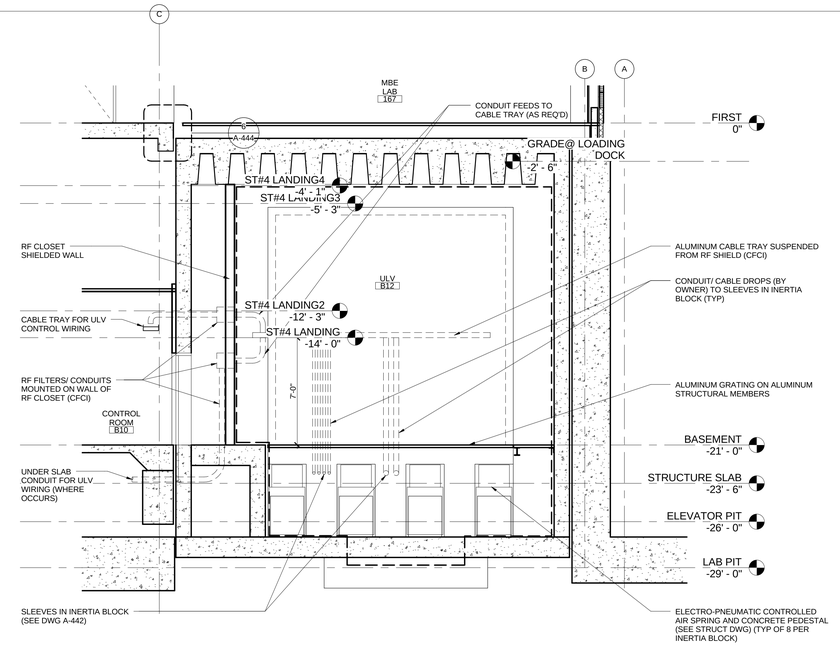

3 ULV/ MBE LAB SECTION NORTH-SOUTH 02
1/4" = 1'-0"

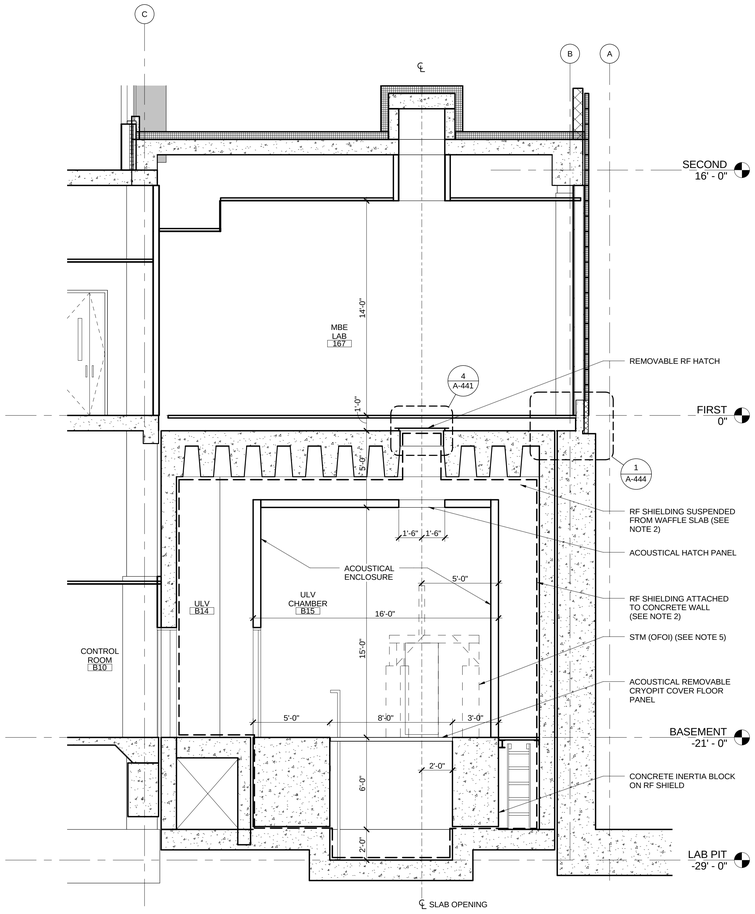

2 ULV/ MBE LAB SECTION NORTH-SOUTH 01
1/4" = 1'-0"

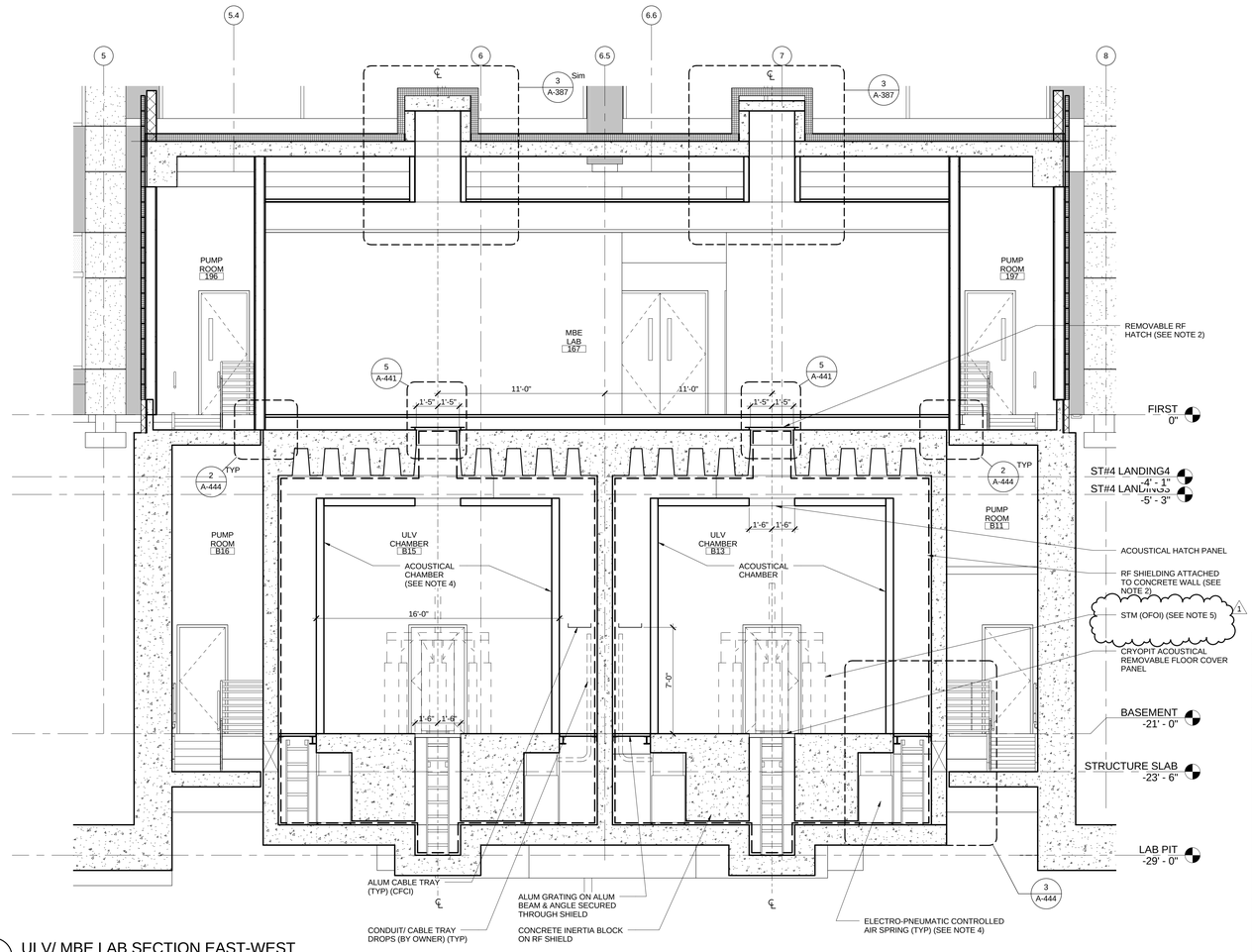

1 ULV/ MBE LAB SECTION EAST-WEST
1/4" = 1'-0"

HDR CUH2A

1101 King Street | Suite 400 | Alexandria, Virginia 22314-2944 | 703.518.8500

IT IS A VIOLATION OF LAW FOR ANY PERSON TO ALTER THESE DOCUMENTS IN ANY WAY UNLESS ACTING UNDER THE DIRECTION OF A LICENSED PROFESSIONAL ENGINEER OR LICENSED ARCHITECT.

GENERAL NOTES:

1) REFER TO DRAWING QL-101C FOR EQUIPMENT
2) REFER TO DRAWING A-443 AND A-444 FOR RF SHIELDING DETAILS.
3) REFER TO STRUCTURAL DRAWINGS FOR INERTIA BLOCK DESIGN AND ALUMINUM GRATING SYSTEM.
4) IN ULV CHAMBER #B15: ACOUSTICAL CHAMBER, INTERTIA BLOCK, RF SHIELDING AIR SPRINGS ARE ALTERNATE #____.
5) STM UNIT, ASSOCIATED PERIPHERAL LAB EQUIPMENT AND HOOKUP OF STM UNIT BY BNL (OFOI). SEE DWG A-442.

JOB NO.	SHEET	NO	REVISION	DATE	DWN.	APP'D.	QA
		1	ADDENDUM #02	05/07/10			
			ISSUE FOR BID	04/09/10			

BROOKHAVEN NATIONAL LABORATORY
UNDER CONTRACT WITH
UNITED STATES DEPARTMENT OF ENERGY
PLANT ENGINEERING DIVISION
UPTON, NEW YORK 11973

JOB TITLE		DWG. TITLE
INTERDISCIPLINARY SCIENCE BUILDING		ENLARGED ULV/MBE SECTIONS
ILR,GPP,LN1, HEM	DATE 04/09/10	ACCT. NO. / SHEET OF
SCALE As indicated	DWN. BY Author / REV'D BY Checker	JOB NO. 079872 / DWG. NO.
ESHQ RISK LEVEL	APP'D. BY Approver	BLDG. NO. / A-441
FILENAME: 079872 A-441		

C:\rvt\07987A-562010-rcruz.rvt
5/6/2010 5:43:53 PM