Powder Diffraction Beamline

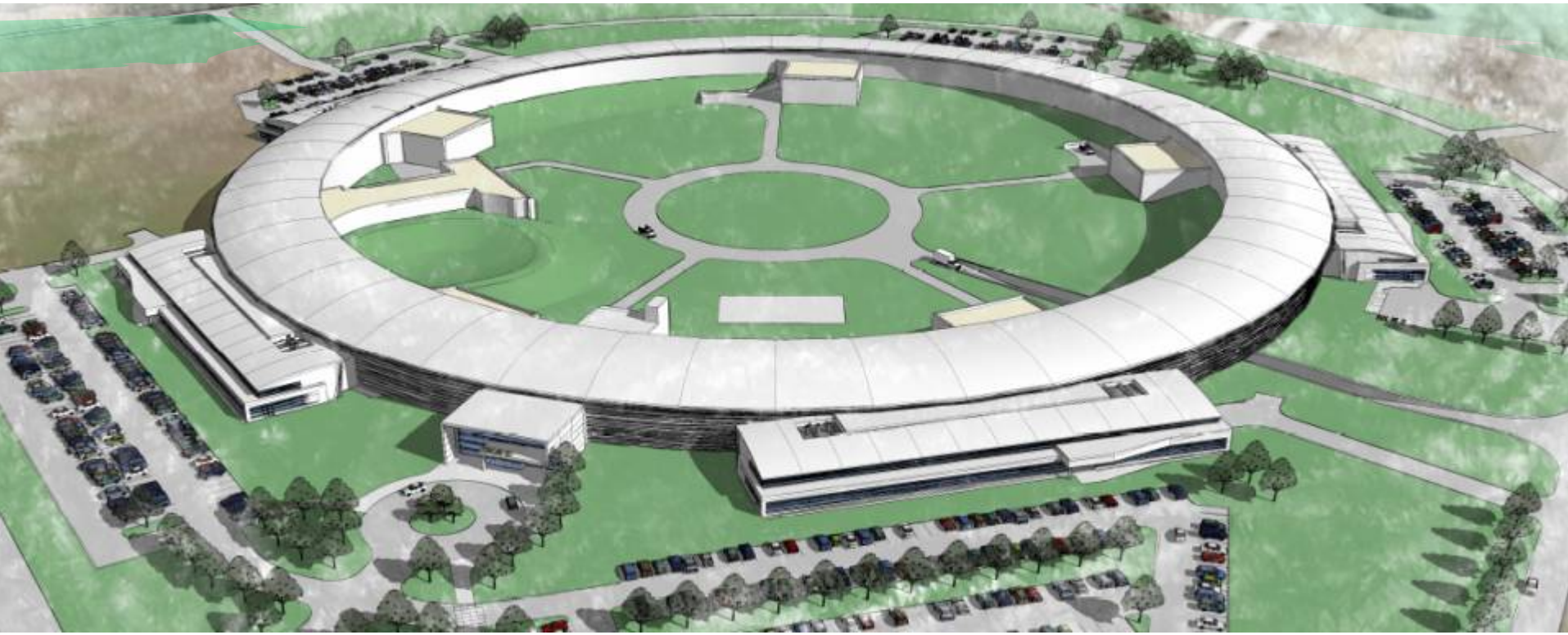

Presented by Andy Broadbent, NSLSII PD Workshop, 16 Jan 2008.
Courtesy of J.M. Ablett & D.P. Siddons, ACCEL Instruments, and others.
Largely based on material presented at the NSLS-II CD-2 DOE Review
November 7, 2007

Office of Science
U.S. DEPARTMENT OF ENERGY

BROOKHAVEN NATIONAL LABORATORY
BROOKHAVEN SCIENCE ASSOCIATES

Outline

1. Planned Scientific Mission (comments needed)!
2. Beamline Design
3. Cost and Schedule
4. Summary
5. Options for Adjacent Beamlines (time permitting)

1. Scientific Mission of NSLS-II PD Beamline

The *proposed* project beamline for powder diffraction studies at NSLS-II will be a tunable high-resolution instrument with the ability to collect data at high energies (20 - 100 keV), offering exceptional capabilities such as fast (milli-second) read-out rates *and* high angular resolution on the same instrument. This will be an outstanding research facility for studying the structure and kinetics of materials under real conditions, and will be designed to meet the needs of the powder diffraction user community.

Some Scientific Thrusts:-

- Structural studies – crystal structures, atomic PDF analysis, glasses.
- *In-situ* studies – phase changes, solid-state chemistry, adsorption / desorption, electrochemistry, etc.; temperature, pressure measurements.
- High throughput – many samples, varied compositions, preparation conditions, etc.
- Quantitative analysis – many phases, trace phases.
- Microstructure – detailed analysis of peak shapes.
- Residual strain – mapping peak positions in components.

1.1 High-Energy, High-Resolution, & Fast, Powder Diffraction

Environmental Cells
High-q (Atomic PDF, DAC). Thick/ High-Z materials → High- Energy (> 50 keV)

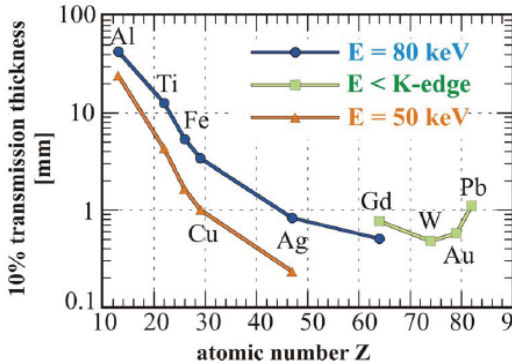

Accurate Peak detection & profile measurements → High- Resolution (analyzer)

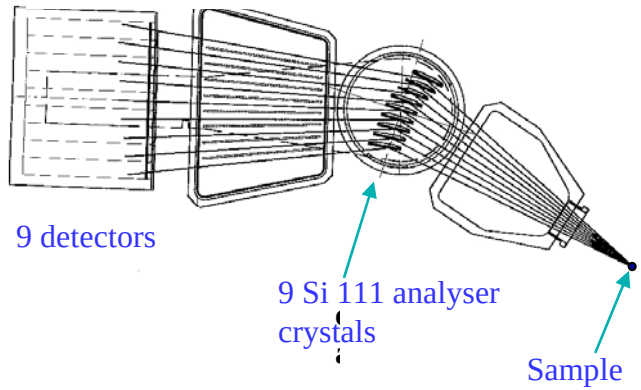

Kinetics → Fast (msec)

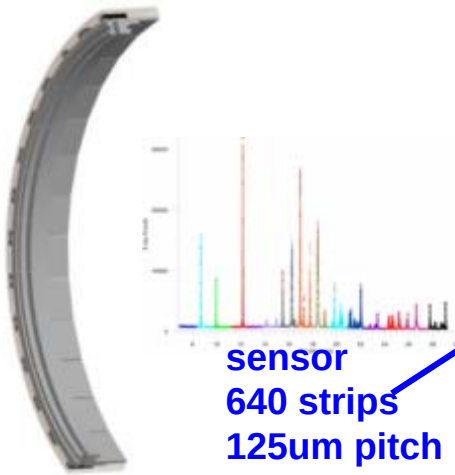

BNL 7000-element silicon strip array detector

sensor
640 strips
125um pitch

20 ASICs
low-noise preamplifiers + discriminators + counters

Office of Science
U.S. DEPARTMENT OF ENERGY

BROOKHAVEN NATIONAL LABORATORY
BROOKHAVEN SCIENCE ASSOCIATES

1.2 Powder Diffraction Input

- NSLS-II Stability Workshop. Apr 18-20, 2007.
- NSLS-II User Workshop Powder Diffraction Breakout Session. July 18th, 2007.

- define the scientific mission and technical capabilities

- over 50 attendees. Chairs: P. Siddons (NSLS, BNL), P. Stephens, J. Parise (Stony Brook)
  Talks: "Next Generation Powder Diffraction", W. David &
  "High-Resolution Powder X-ray Diffraction", A. Fitch.

- NSLS-II Comprehensive Design Review. Sep 11-13th, 2007.
- EFAC. Oct 4th, 2007
- NSLS-II powder diffraction workshop. NOW!

1.3 Beamline Requirements and Specifications

Photon Beam Stability Requirements

(NSLS-II stability workshop page: www.bnl.gov/nsls2/workshops/Stability_Wshop_4-18-07.asp)

Operational Modes: crystal analyzer (angular stability), area detector (position stability).

10 μm spatial stability in both x-and-y (area detector)

1 μrad angular stability in vertical diffraction plane (analyzer mode).

Monochromator temperature stability < 10°C

.

1.3 Beamline Requirements and Specifications

- **High Energy Capabilities:** (thick samples, high-Z components, atomic, PDF, environmental cells) :- Damping Wiggler Source.

- **Robust Beamline:-** Attenuators. Reduces powerload on downstream optical components by filtering out the unused low/medium energy x-rays.

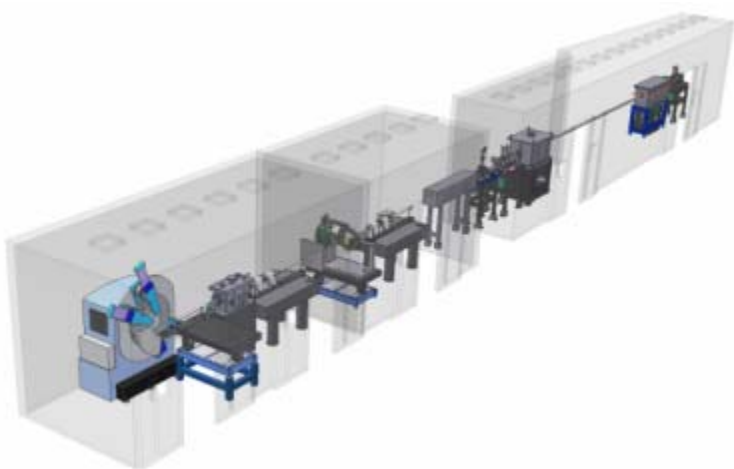

- **Monochromator; tunable and to high energy, with sagital focusing:-** Sagitally-Focusing Double-Crystal Laue
  - **Energy Range. 20 keV to 100 keV**
  - **Energy Resolution. dE/E $1x10^{-4}$ to dE/E $1x10^{-3}$**
  - **Horizontal Focusing: (2:1) ~ 300 µm (fwhm)**

- **Collimation or vertical focusing (below 40 keV)** 1.5 m long Pt-coated mirror operating at 2 mrad fixed incidence angle
  - **Vertical Focusing: 400 µm (fwhm)**
  - **Vertical Divergence: <5 µrad rms to 100 µrad**

- **For Diamond-Anvil Cell Research:-** Horizontally Focusing Graded-Multilayer (~28:1) - ~ 14 µm (fwhm), located in experimental end-station.

- **For high-resolution work:-** multi-crystal analyzer array.

- **For fast (msec) time-resolved studies:** - 7000 element silicon strip detector.

2. NSLS-II Powder Diffraction Beamline Design

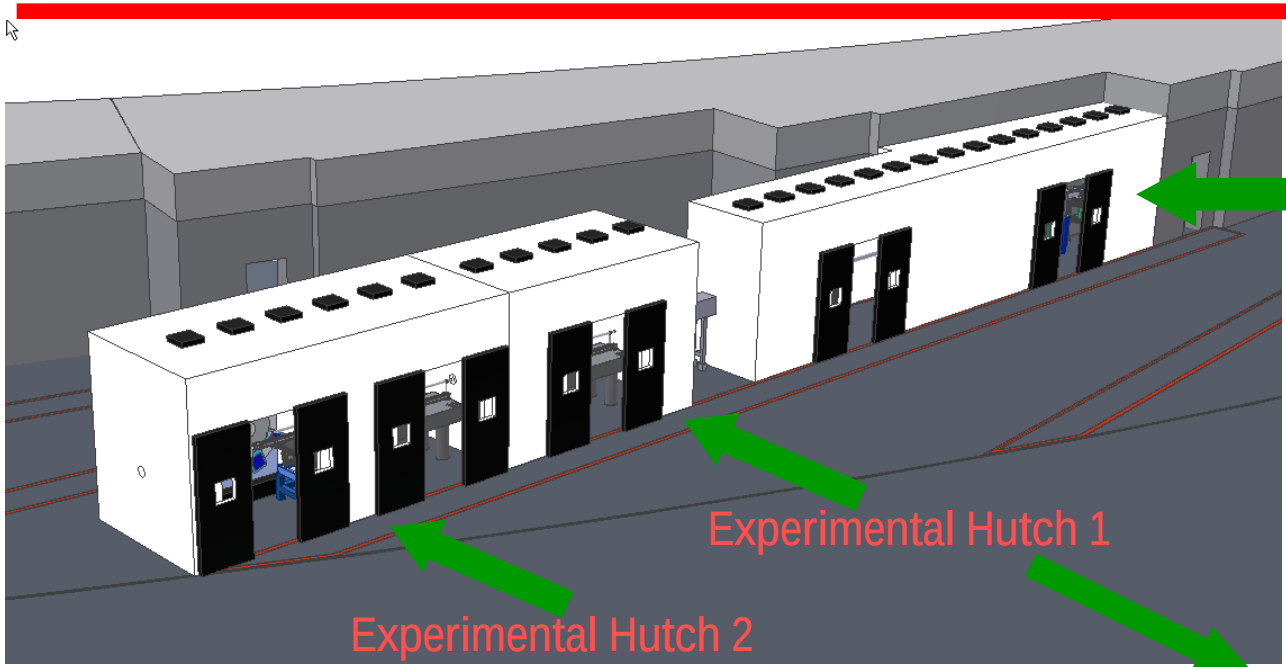

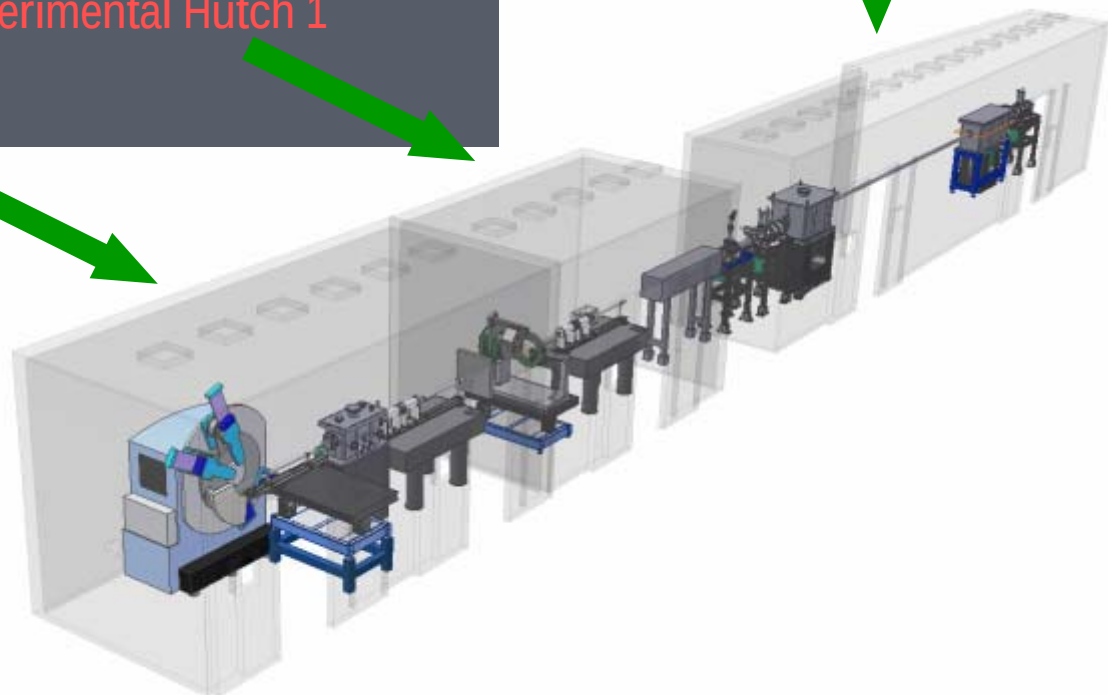

Office of Science
U.S. DEPARTMENT OF ENERGY

2. NSLS-II Powder Diffraction Beamline Design

Proposed End Station 2. High Energy, with high Resolution Crystal Analyzer and Strip Detector

Proposed End Station 1. Routine Powder Diffraction with CCD

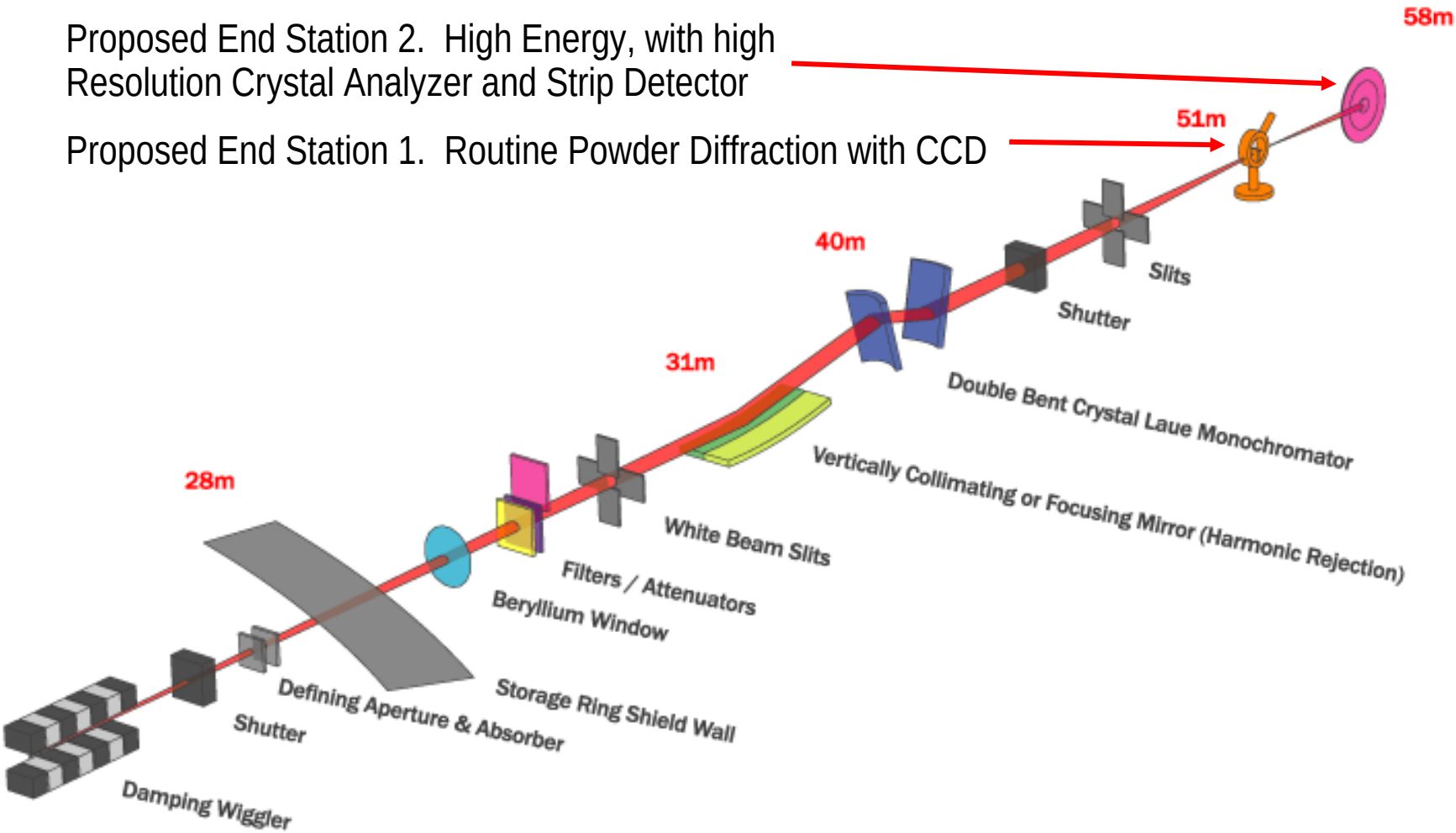

2.1 Beamline Layout

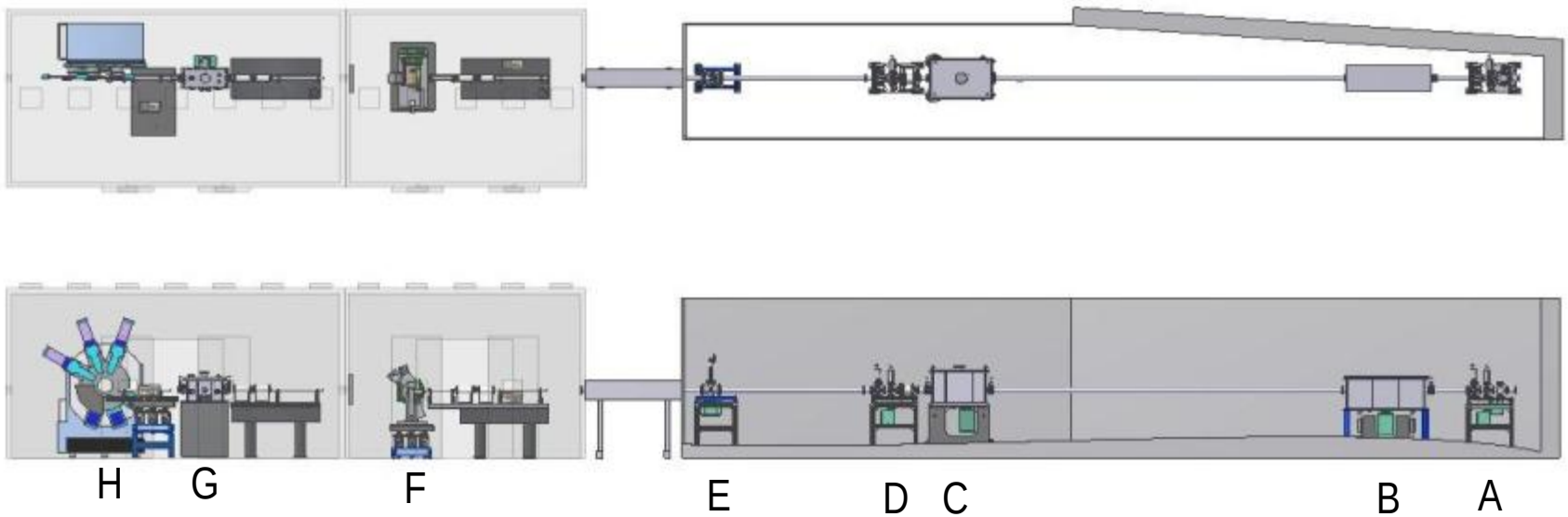

A. 29.0 m. Be window & filters

B. 31.1 m 1.5 m long mirror (foc. & coll)

C. 39.95m Laue Mono - sagitally focusing

D. 41.36 m Beam Monitoring

E. 45.1 m Photon Shutter

F. 51.3 m Sample A Position

G. 55.592 m HFM Multilayer

H. 57.6578 m Sample B Pos.

Experimental Hutch 1 (F): 'Routine' Powder Diffraction with Area Detector.
Enclosure costed. Equipment to be used from NSLS-I stock.

Experimental Hutch 2 (G&H): High-Energy, High-Resolution or time resolved: included in project baseline.

2.1 Beamline Layout on Floor

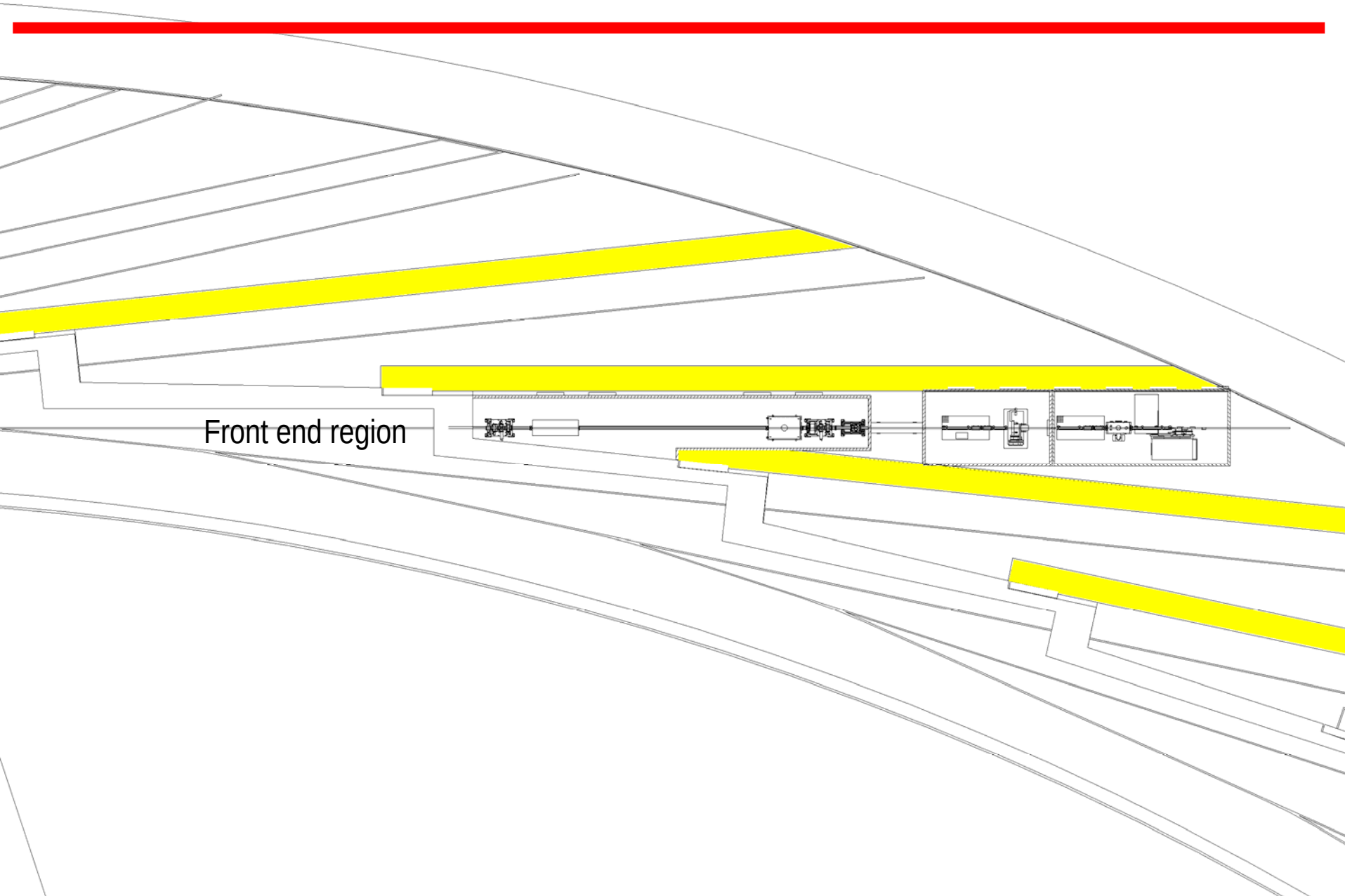

2.2 Damping Wiggler Insertion Device

- Damping Wiggler (high-β straight)
- Damping Wiggler will provide high flux, high brightness hard x-rays ($E_{critical}$~10.8 keV)

Total Power (integrated over all angles) ~ 65 kW

Power Density ~ 54.9 kW/ mrad^2

machine and damping wiggler parameters

Eo	3 GeV
Io	500 mA
N periods	70
λ_u	10 cm (tbc)
B	1.8 Tesla
k	16.81

rms electron beam values

σ_x	99 µm
σ_z	5.5 µm
σ_x'	5.5 µrad
σ_z'	1.8 µrad

2.2 Damping Wiggler: Flux and Brightness

Flux at various NSLS-II sources

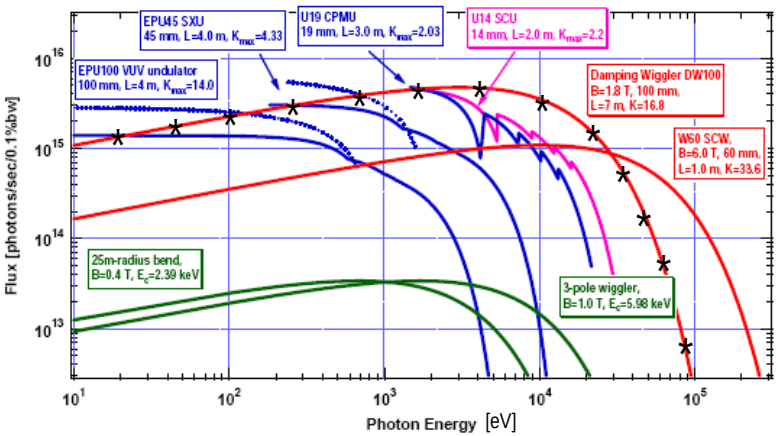

Brightness at various NSLS-II sources

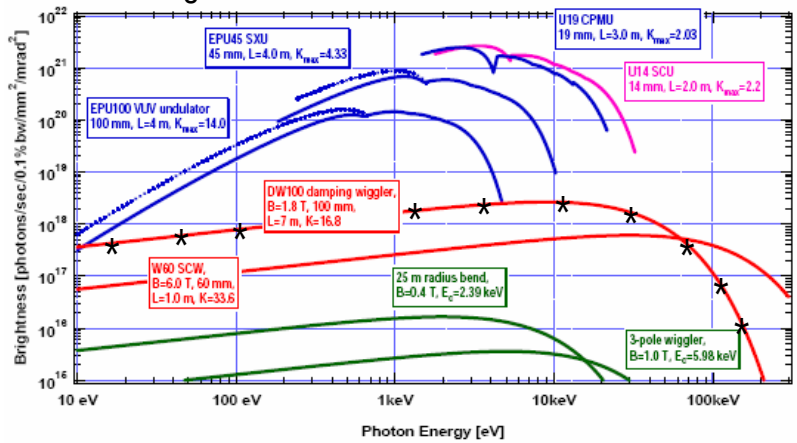

Flux Comparison between NSLS-II DW and X17 SCW

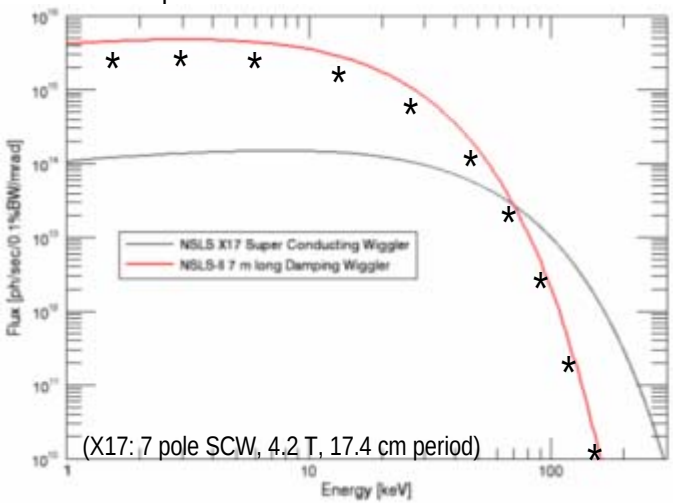

Brightness Comparison between NSLS-II DW and X17 SCW

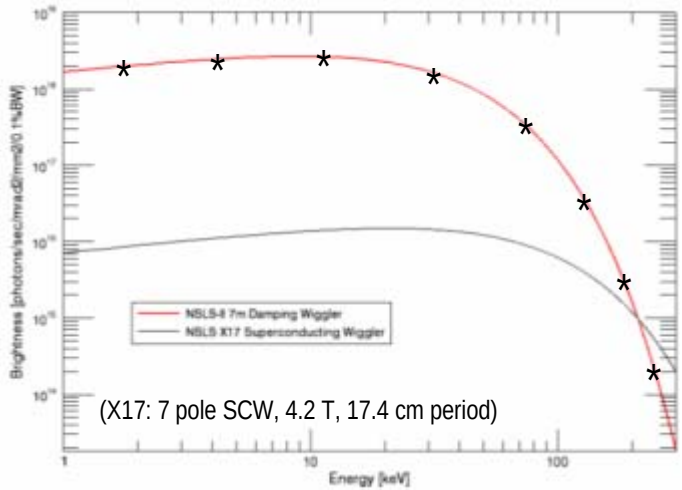

2.3 Power Load Considerations

How can reduce the 65kW incident power load to something reasonable?

- by means of a tight aperture (1mrad H, x 0.1mrad V), we can reduce the heat load to 5kW, and
- by including heavy filters (~5mm carbon) to remove low energy x-rays we can reduce the heat loads on the Laue mono to manageable values.

This restricts the beamline to >20keV operations.

2.4 Vertically Focusing/Collimating Mirror

Length: 1.5 m, mirror bender
Pt Coated, 2 mrad grazing incidence
Vertically Focusing (~ 1:1) or collimating
Operating Energy Range (with Laue) 20 - 40 keV

Mirror FEA

'Worst Case' Scenario initially assumed:

Total Power: 7 kW (actually ~2 kW)
Power Density: 0.18 W/mm^2
Black: Silicon mirror with side cooling
Red: Silicon mirror directly cooled

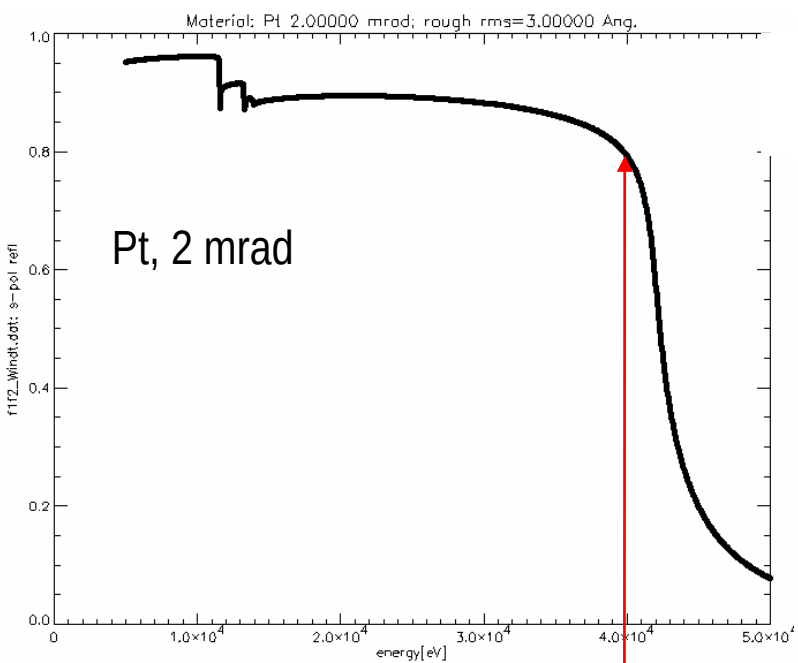

can correct thermally induced slope by bending

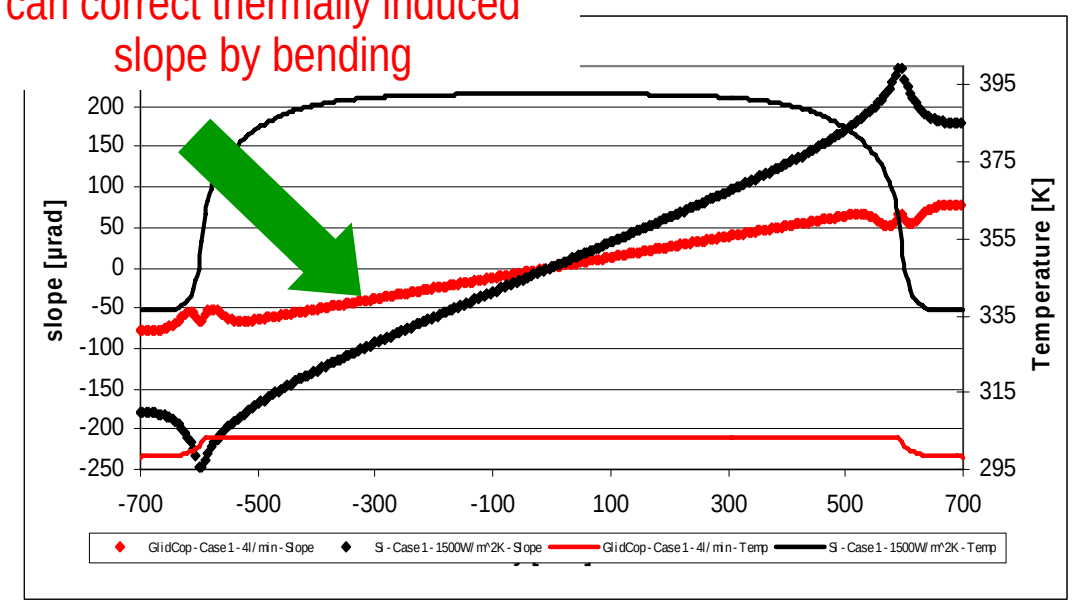

Office of Science
U.S. DEPARTMENT OF ENERGY
BROOKHAVEN NATIONAL LABORATORY
BROOKHAVEN SCIENCE ASSOCIATES

2.5 Sagitally Focusing Double-Crystal Laue Monochromator

- In use at NSLS X17, (tested for X7B)
- Can take a large horizontal fan (> 3 cm) and focus it down to a few hundred microns
- Fixed Exit - modified boomerang style design
- Asymmetric Bent Si (111), Si (311)
- Band-Width (in focusing mode)
dE/E ~ few x 10^{-3} for Si(111) ~1x10^{-4} for Si(311)
- Energy Range: 20 to 100 keV
- Side-water cooling works at X17, but more power on NSLS-II damping wiggler

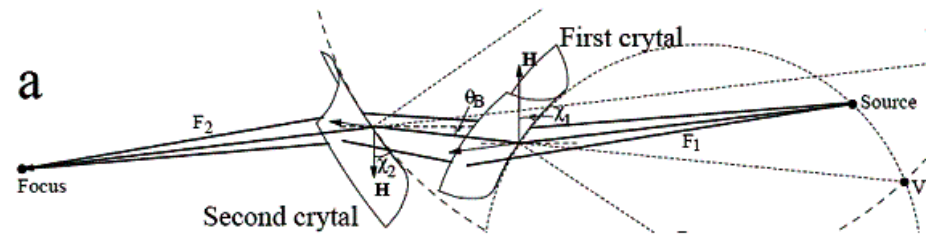

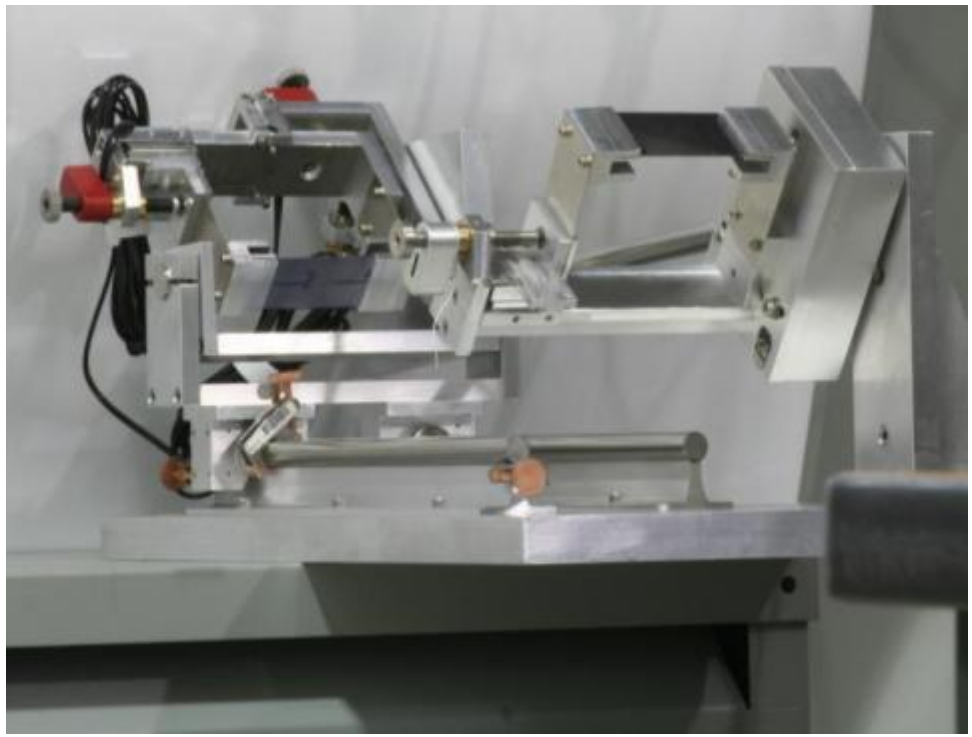

2.5 Sagitally Focusing Double-Crystal Laue Monochromator

Power Loads

C - prefilter (mm)	Si filter (mm)	Power abs. in C [W]	Power abs. in Si [W]	Power abs. in 1st laue xtal [W]	Power dump in beam stop [W]
2	0	3331	0	1642	2435
2	1	3331	2246	354	1477
2	2	3331	2840	177	1060
5	0	4560	0	907	1941
5	1	4560	1341	271	1236
5	**2**	**4560**	**1803**	**143**	**902**

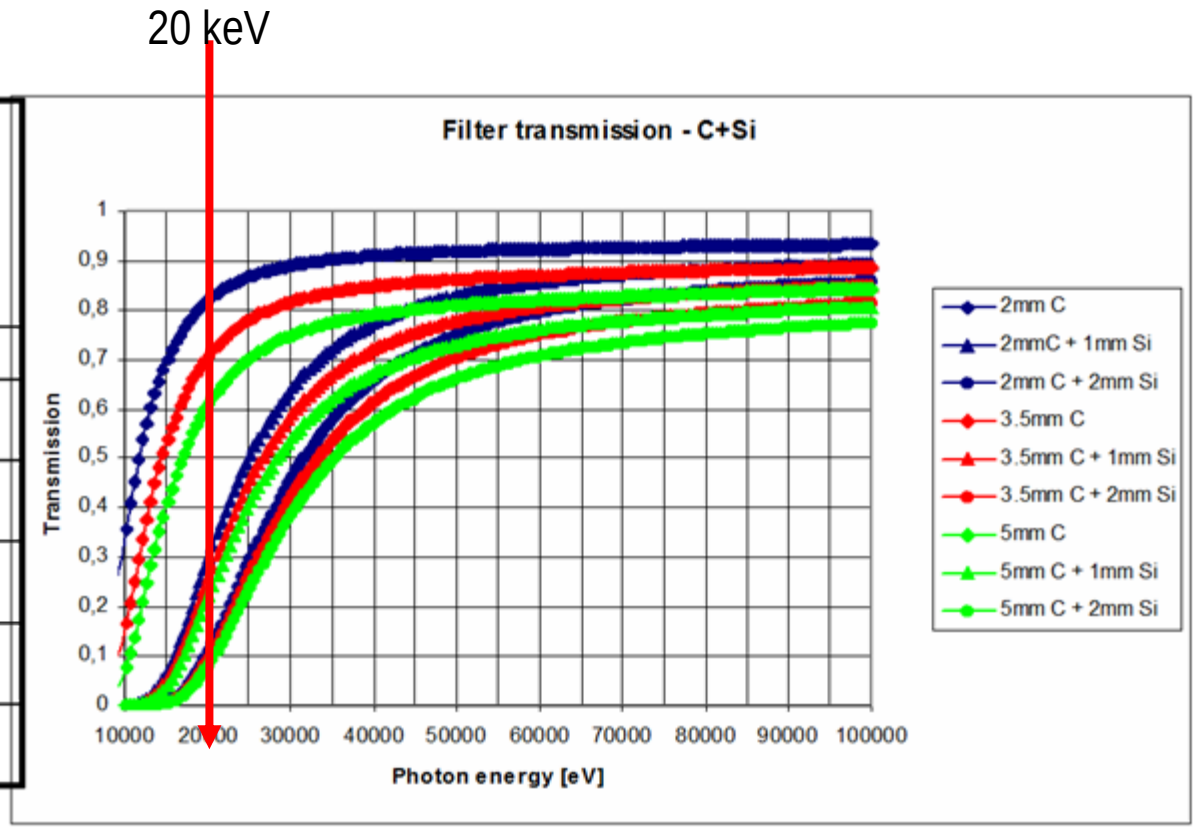

~ 150 W absorbed by first crystal. This is still significant.
- R&D needed on possible cooling schemes.
- NSLS-II has a thermal management R&D program.

2.6 Experimental Endstation 2 - Back Hutch

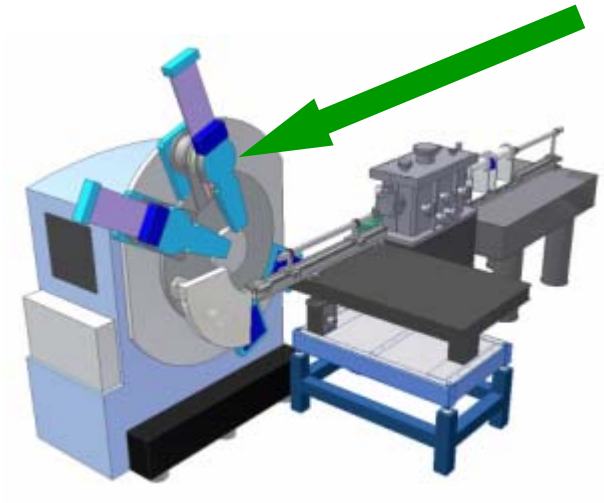

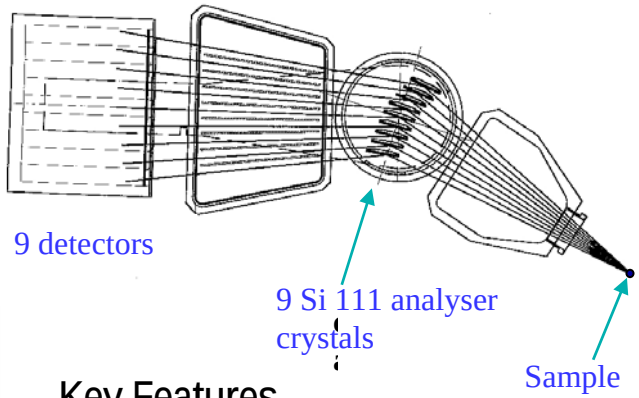

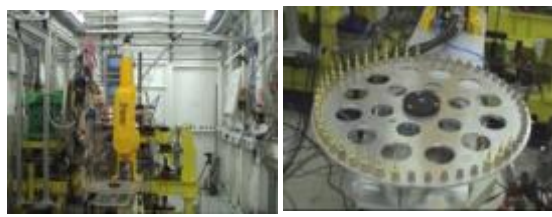

ESRF robot

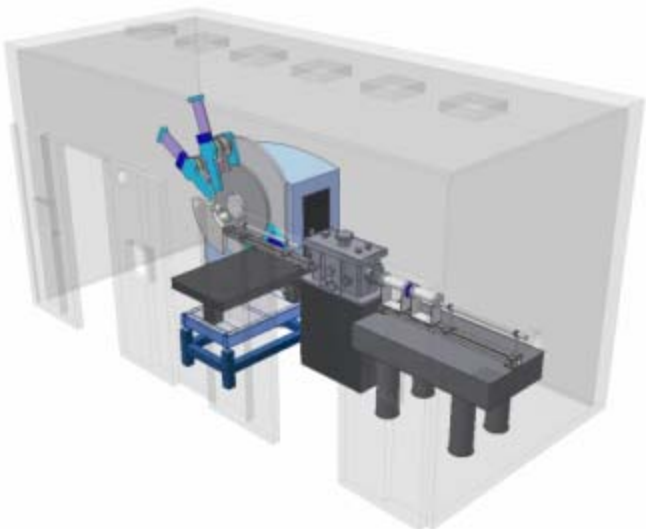

<u>Key Features</u>

High resolution diffractometer

Graded Multilayer Focusing

Robot Sample Changer * not shown

Sample environments (furnaces, DACs, cryostats)* not shown

Laue Analyser Crystals

7000 element Silicon Strip Detector, fast read out (msec)

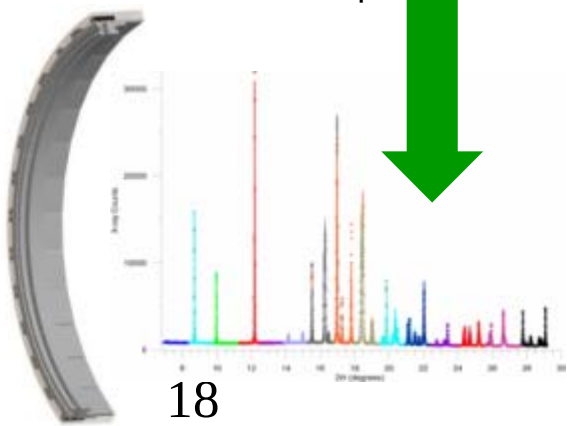

Office of Science
U.S. DEPARTMENT OF ENERGY
BROOKHAVEN NATIONAL LABORATORY
BROOKHAVEN SCIENCE ASSOCIATES

2.6 Horizontally Focusing Bent Graded-Multilayer

Current technology : L=0.5 m. Possibly L=1 m in the future.

Place as close to sample as possible for maximum focusing effect (applicable for Diamond Anvil Cell Work). 28:1 demag - 14 μm fwhm horizontal focus.

Example Layers: Ir (20Å)/B_4C(20Å) - 70 periods.

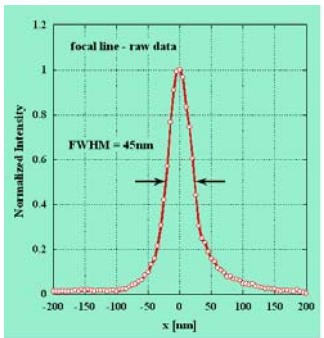

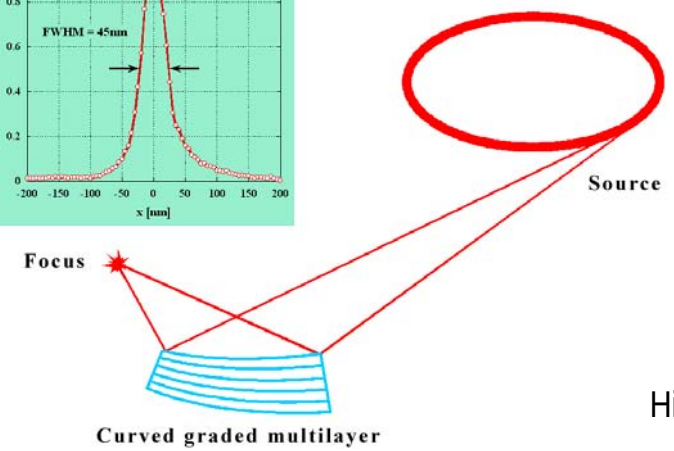

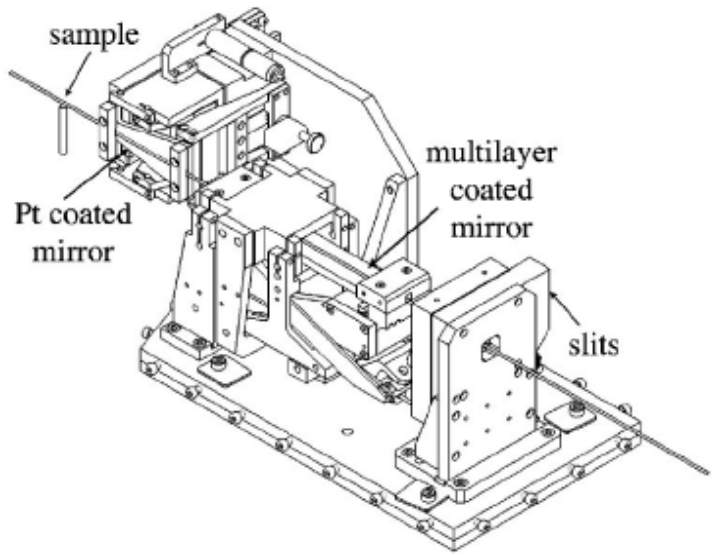

Hignette(ESRF), Rev. Sci. Instrum, 76(6), 063709, 2005

The multilayer consists of 30 W/B4C layers with a period of 4.7 nm at the center. It has a 33% nonlinear gradient in period along the length of the mirror designed so that the Bragg angle condition is kept despite the variation in the angle of incidence.

2.7 Experimental Endstation 1 - Front Hutch

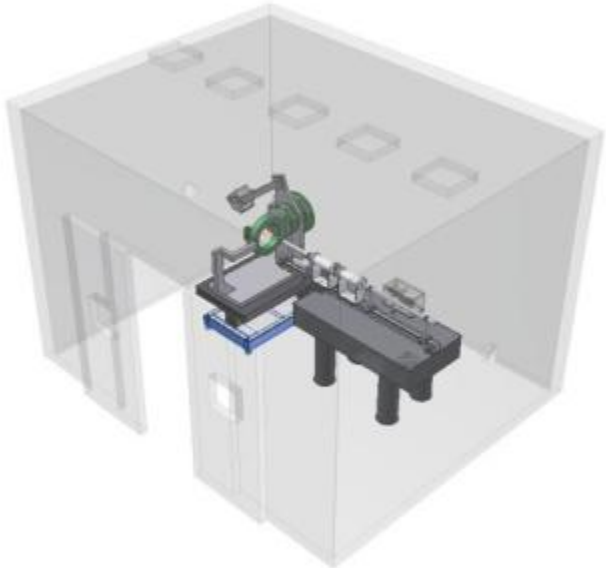

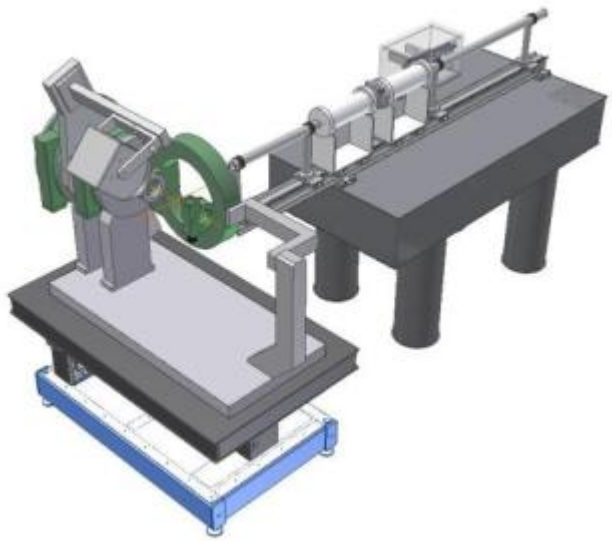

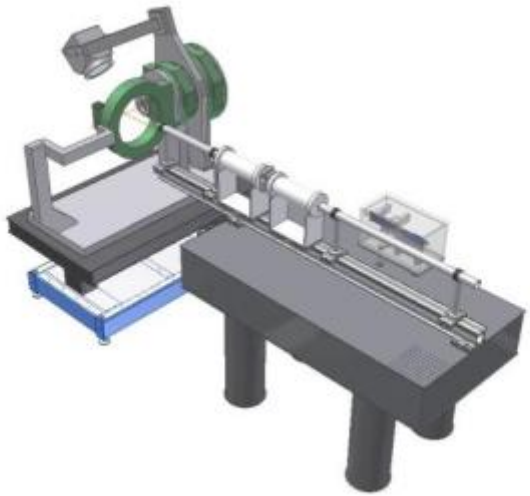

<u>Enclosure *only* costed, equipment to be used from NSLS-I</u>

<u>Key Features</u>

CCD area detector

Graded Multilayer Focusing * not shown,

Robot Sample Changer * not shown

Sample environments (furnaces, DACs, cryostats)* not shown

2.8 Outstanding Issues

- Thermal heat loads seem tolerable but R&D effort needed -Filters, Mirrors and Laue Mono. NSLS-II Thermal Management R&D.

- Full Ray-Tracing on Final Beamline layout needs to be performed to verify performance.

3.1 Damping Wiggler Beamline 2, X-ray Powder Diffraction (XPD), Total Estimated Cost ($ x 1000)

WBS Dictionary: All activity related to the design, construction, and commissioning of a damping wiggler beamline for high-energy x-ray powder diffraction.

WBS Description	Direct $			Total Burdened & Escalated	Bottoms up Contingency		Total with Contingency
	FTEs	Labor	Non-Labor (Mtrl, Trvl, Act)		%	$ Value	
1.04.05.06 Damping Wiggler Beamline2 X-ray Powder Diffraction (XPD)	**13.4**	**1,143**	**5,869**	**9,398**	**25**	**2,381**	**11,780**
1.04.05.06.01 Enclosures	0.3	20	1,176	1,420	3	398	1,817
1.04.05.06.02 Beam Transport	0.4	28	330	465	1	47	512
1.04.05.06.03 Utilities	1.0	61	100	232	2	46	278
1.04.05.06.04 White Beam Components	0.1	9	279	341	5	130	471
1.04.05.06.05 Beam Conditioning Optics	0.2	13	440	567	2	165	732
1.04.05.06.06 Personnel Safety System	0.8	49	65	179	.24	43	222
1.04.05.06.07 Equipment Protection System	0.4	24	25	83	1	15	98
1.04.05.06.08 Endstation 1	0.2	21	1,725	2,179	2	305	2,484
1.04.05.06.09 Intentionally Left Blank	0	0	0	0	0	0	0
1.04.05.06.10 Beamline Controls	0.2	12	378	500	2	150	650
1.04.05.06.11 Beamline Control Station	0	0	25	34	0	0	34
1.04.05.06.12 Beamline Management	8.9	827	28	1,680	2	826	2,506
1.04.05.06.13 High Heatload Optics	0.9	78	1,299	1,717	2	258	1,975

3.2 Powder Diffraction Beamline Schedule

NSLS-II Project

Damping Wiggler Beamline 2, X-ray Powder Diffraction (XPD)

Summary Schedule by Phase

30-Oct-07 17:44

Activity Name	Original	Start	Finish
Conceptual Design	384	01-Oct-07	14-Apr-09
Preliminary Design	589	14-Apr-08	17-Aug-10
Final Design	330	04-Oct-10	01-Feb-12
Bid & Award	418	08-Dec-10	08-Aug-12
Procurement	611	16-Mar-11	22-Aug-13
Installation	477	10-Feb-12	07-Jan-14
Subsystem Testing	420	15-Jun-12	21-Feb-14
Integrated Testing	44	24-Feb-14	24-Apr-14
Level of Effort	1682	01-Oct-07	23-Jun-14

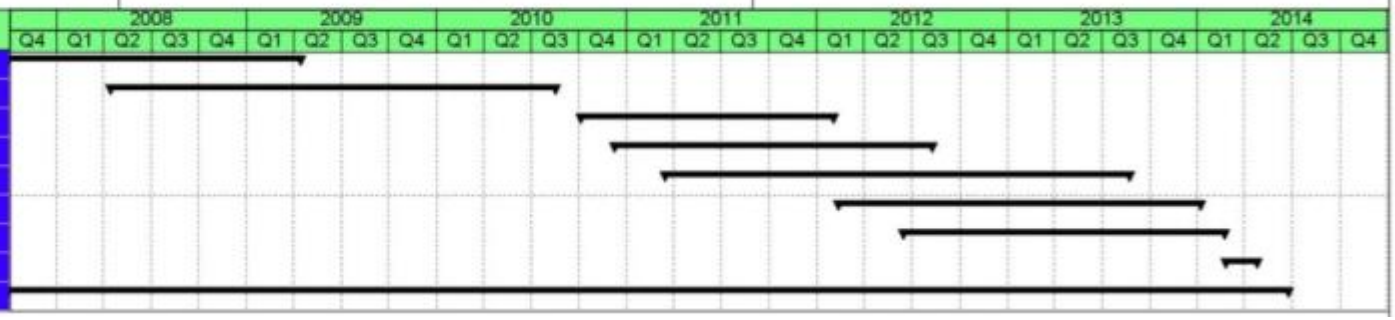

Budgeted staffing profile

Scientists

Engineers

Technicians

Operations Staff

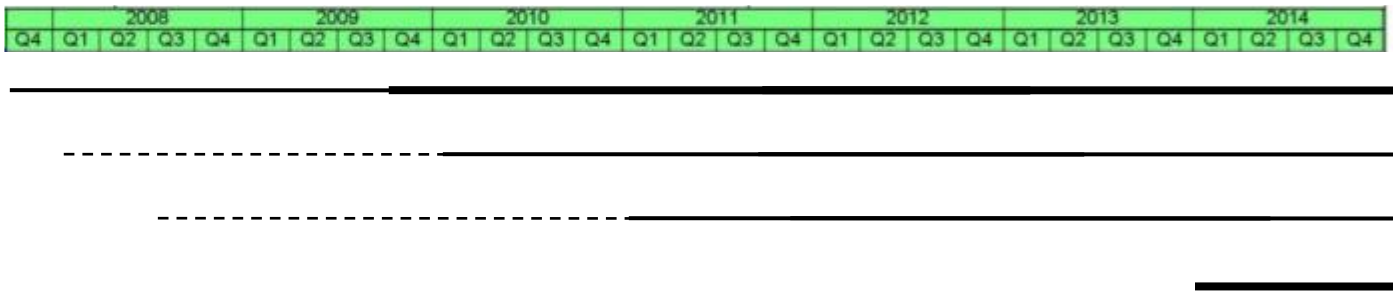

4. Summary

- The proposed powder diffractometer at NSLS-II will offer exceptional capabilities such as tunable high-energy x-rays (20-100 keV), high-resolution & fast read-out rates (msec).
- It will allow in-situ studies of samples at high temperatures, high pressures and in chemical environments.
- In-situ phase-transformations will be studied using the fast (milli-second) strip detector.
- It will meet the *anticipated* needs of the large x-ray powder diffraction community to perform world class science. ***We want your feedback!***
- *Relatively* straight forward beamline. High heat loads can be managed. Endstation capabilities are off-the-shelf or in-house designs exist.
- The costs and schedule estimates are quite appropriate to deliver this beamline for 2014 conditioning.

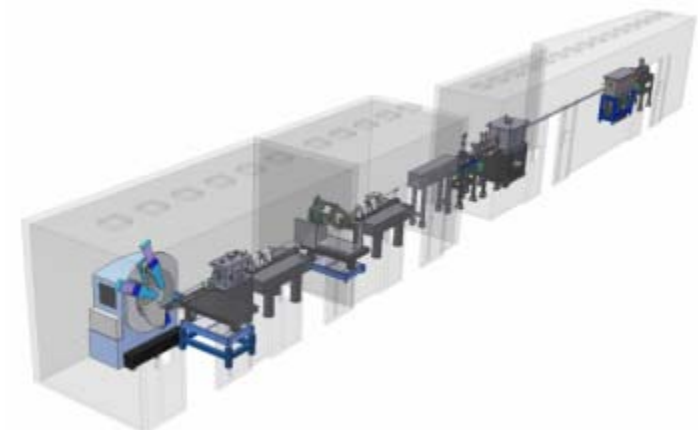

Adjacent Beamlines & Floor Layout Considerations

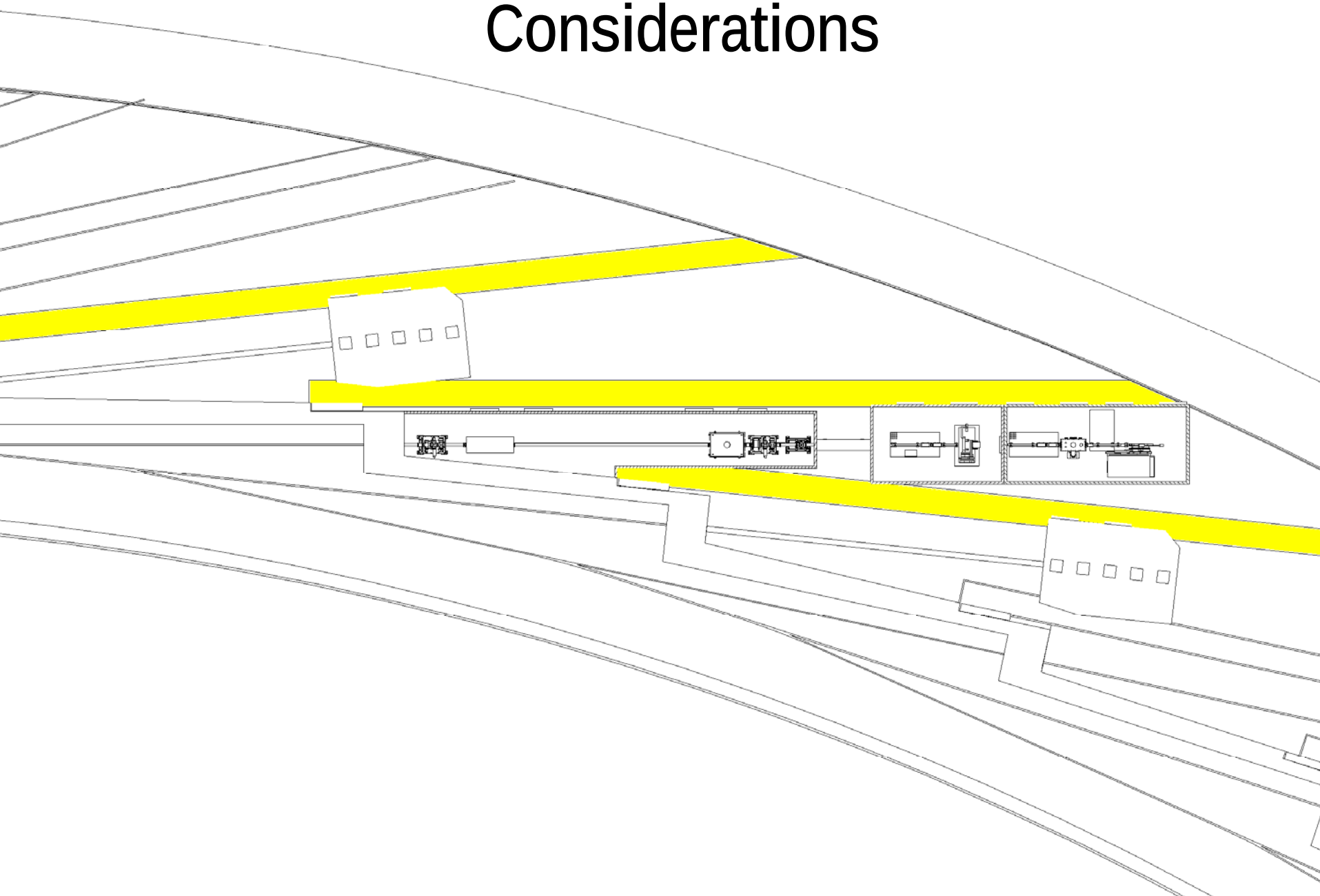

1.1 High Resolution Powder Diffraction

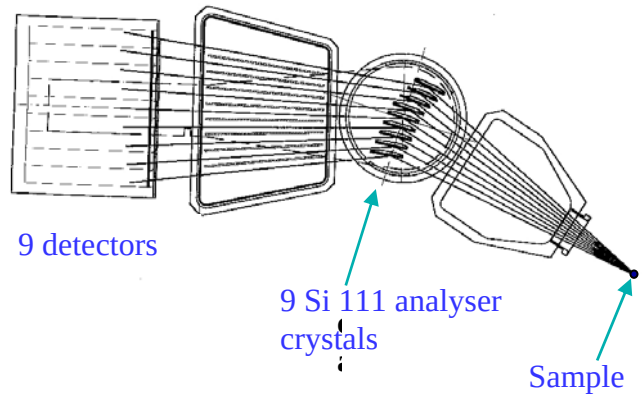

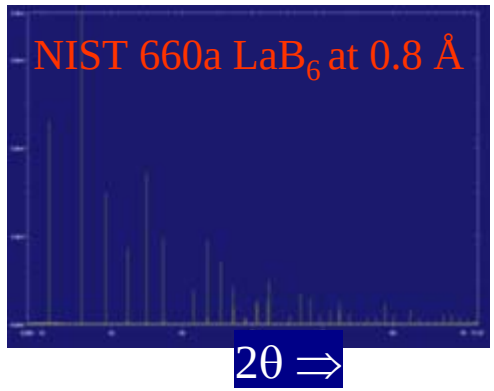

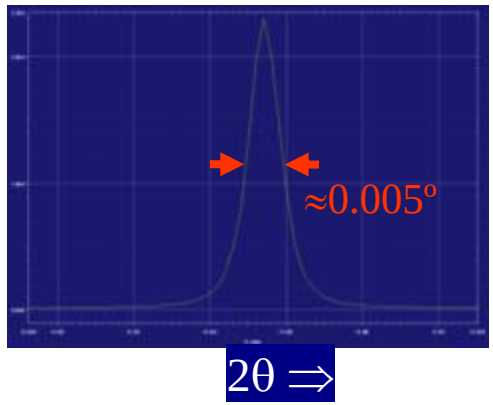

Analyzer crystal array provides narrow peaks, accurate peak profiles and low background - surpresses fluorescence, Compton and parasitic scatter.

High Resolution Powder Diffraction at:
SLS, APS, SOLEIL, Australian Synchrotron, ALBA...

BROOKHAVEN NATIONAL LABORATORY
BROOKHAVEN SCIENCE ASSOCIATES

1.1 Fast Powder Diffraction

Swiss Light Source

- 2θ range: 60º
- ≈15000 channels
- 250 μs readout

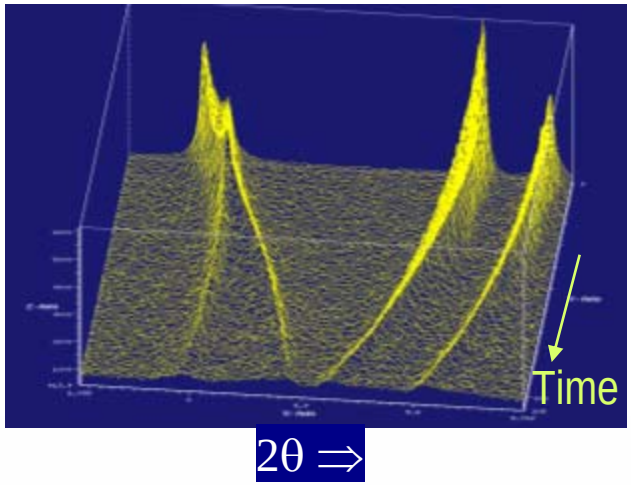

'Low'-resolution strip detector data

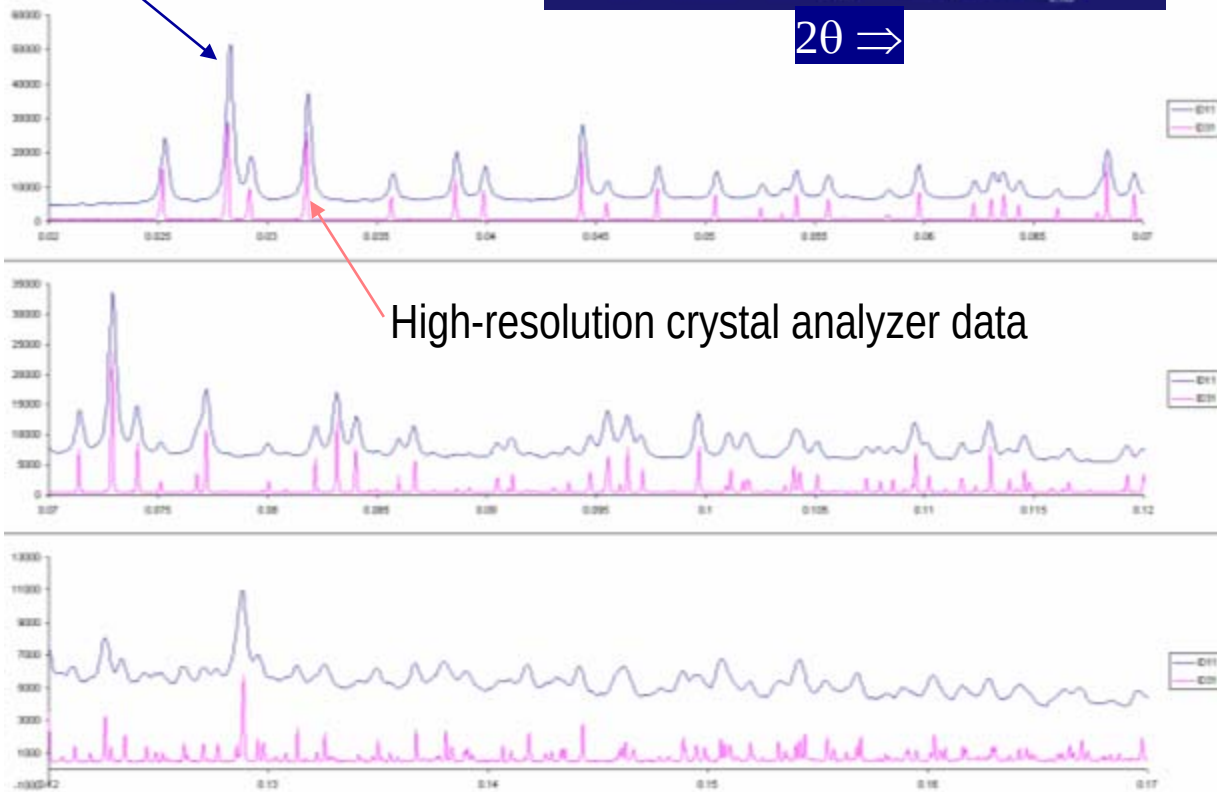

Office of Science
U.S. DEPARTMENT OF ENERGY

courtesy of A. Fitch