Shielding Design of the PAL-XFEL Tunnel and Its Test Facilities

Nam-Suk Jung, Hee-Seock Lee, Bum-Jong Kim, Joo-Hee Oh, Min-Ho Kim and In Soo Ko

Pohang Accelerator Laboratory/POSTECH

nsjung@postech.ac.kr

The PAL-XFEL is a X-ray free electron laser using 10 GeV, 0.2 nC electron beams. The construction of the PAL-XFEL starts in 2012. The thickness of tunnel was calculated using the SHIELD11 and the FLUKA code with a consideration of the normal loss scenario. Shielding performance was estimated about each entrance of tunnel using the FLUKA code. Also the shielding performance of the duct structure located at tunnel ceiling was estimated. Shielding structures of two test facilities were designed. The commissioning of two facilities has been performing and the results of radiation dose measurement during the commissioning are described.

1. Introduction

Pohang Accelerator Laboratory (PAL) is developing a X-ray free electron laser, PAL-XFEL, using 10 GeV, 0.2 nC/pulse, 60 Hz electron beams. General layout of the PAL-XFEL is shown in Figure 1. A linac of the PAL-XFEL is the s-band type and its length is 710 m in order to accelerate electrons to energy of 10 GeV. Electrons are incident to the long out-vacuum type undulator through the beam transfer line. Electrons through the undulator are dumped before the optical hutch and the X-ray free electron laser reach the experimental area through the optical hutch. In this study, the shielding of the PAL-XFEL tunnel and two test facilities was designed. One is the injector test facility (ITF) for the test of the real size injector of the PAL-XFEL and another is the accelerating column test facility (ATF) for the test and aging the accelerating column which will be used at the PAL-XFEL linac.

2. Shielding design of the PAL-XFEL tunnel

The normal loss scenario of the PAL-XFEL can be categorized as the full power beam loss at the beam dump and the low power beam loss at the linac, the undulator and the tune-up dump, etc. The limit of beam loss at the linac and the undulator was established as 1% and 0.1% of full power beam loss, respectively. When the large beam loss occurs above the limit, the interlock system will be operated. Fig. 2 shows the required tunnel thickness along the accelerator at different energy and loss condition using SHIELD11[1]. The surface radiation dose rate at the PAL is limited to 10 mSv/year which is the half of the dose limit of radiation worker, and it can be converted as 5 μSv/h with assumption of annual working time of 2000 h. Thickness of the tunnel is increased with the increasing of the electron energy and the thickness of hard X-ray linac and undulator section is 200 cm. Shielding is sufficient with the beam loss scenario under the limit at the linac and the undulator. But the shielding thickness is not enough with the full power beam loss at main beam dump scenario. Hence the main beam dump will be installed at the pit.

Fig. 3 shows the example of the result of the sliding door entrance using FLUKA[2]. Basically, the thickness of the sliding door is same with the tunnel wall. In this linac region, the wall thickness is 200 cm. The gap between the door and the floor or the tunnel wall was set as 5 mm. And the overlap length was at least 60 cm all sides. When the 1% of full power beam loss occurs, the dose rate due to the radiation leakage at the gap of the sliding door is 3 μSv/h. And the dose rate on the tunnel surface

is 3 μSv/h and it is similar result with SHIELD11. The shielding door was designed as placing the iron layer alternately with the ordinary concrete layer. Then it can be reduced the door thickness when the material of the door is only ordinary concrete. Now, we are discussing the detailed door design with the door making company.

Fig. 4 shows the example of the result of the maze entrance. The maze entrance is good to protect the secondary radiation. Most contributed radiation at the maze exit is the neutron. The duct at tunnel ceiling is designed as maze structure to protect direct radiation shower to upper direction as shown in Fig. 5. The periphery of the duct which have high radiation dose will be set as the radiologically-controlled area.

3. Shielding design and the commissioning result of the test facility, ITF

The ITF is located at the end of the PLS-II linac building. The ITF tunnel has the same concrete wall thickness with the tunnel of PAL-XFEL injector section (100, 150 cm), but the difference is the application of the lower limitation of radiation dose at the opposite side wall of the klystron gallery and the wall toward the beam direction which are adjacent to the thin outer wall of the building. The radiation dose limitation inside and outside the building are 10 mSv/yr and 1 mSv/yr, respectively. The thickness of the tunnel ceiling is 60 cm, and it is relatively thinner than the side wall. The beam dump of the ITF was designed using the FLUKA and MCNPX [3] code. The dump design is shown in Fig. 6 and calculation results are shown in Fig. 7 and Table 1. The maximum energy, the charge and the repetition rate of electron beam is 140 MeV, 0.2 nC, 60 Hz. Because the dose rate at the tunnel ceiling is above the operational limit, the access toward the roof is prohibited during the ITF operation. Fig. 8 shows the plan view of the dose rate distribution for the accidental loss case. The full power beam loss at the thick target after the accelerating structure was assumed. Additional shielding structures inside and outside of the tunnel were installed to reduce the dose rate to the limit. Using the Fig. 8, the position of the detector of the radiation monitoring system (RMS) was determined. The photon detector is the ion chamber, HPI 6035B and the neutron detector is AB remmeter, HPI 6065. The ITF is presently operating with 10 Hz repetition rate, and radiation level is background at all RMS position.

4. Shielding design and the commissioning result of the test facility, ATF

The ATF is located at the PLS-II linac assembly room. The source term of the ATF is the dark current and the shielding of the ATF was designed as shown in Fig. 9 using MCNPX code. Dark current estimation is difficult because the quantity of impurities attached at each column is different. Our RF group estimates the dark current of 1 pA from the data of other accelerating column [4], but the value was increased as 1 nA after the accumulate dose measurement using OSLN during the test of accelerating column by RI. After the change of beam current estimation, the geometry of additional lead shield was changed and the accumulate dose was measured using same method during the test of accelerating column by Mitsubishi. In this test, the measured dose was the background level.

5. Conclusion

The shielding of the linac and undulator tunnel of the PAL-XFEL was designed. The normal beam loss scenario was established and the bulk tunnel thickness was determined using SHIELD11 and FLUKA. And complicated tunnel structures like entrance and duct were designed. Also the shielding of the two test facilities was designed. Presently, ITF radiation level is background. The accelerating column by RI was tested at ATF with OSLN measurement and the design of additional lead shield was

changed.

Reference

[1] W.R. Nelson and T.M. Jenkins, “The SHIELD11 Computer Code”, SLAC-R-737, Stanford Linear Accelerator Center, 2005.

[2] A. Ferrari et.al., “FLUKA, A Multi-particle transport code”, CERN-2005-010, CERN, 2005.

[3] D.B. Pelowitz et.al., “MCNPX 2.7.E Extensions”, LA-UR-11-01502, LANL, 2011.

[4] H. Matsumoto, “Dark Current” in Proceeding of XVIII International Linac Conference, 26-30 Aug. 1996, Geneva, Switzerland.

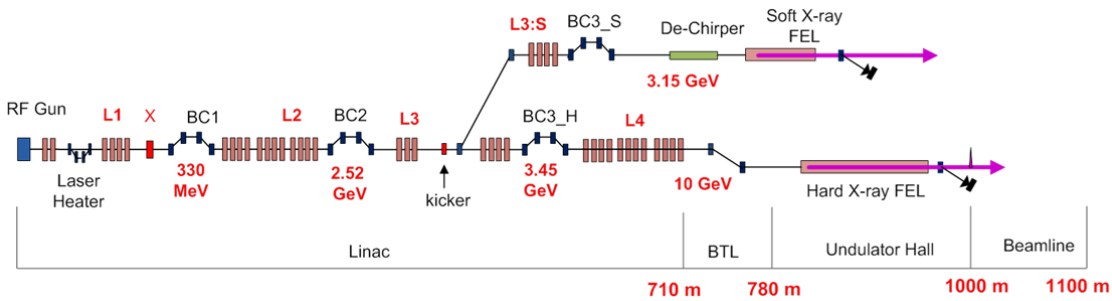

Figure 1. General Layout of PAL-XFEL.

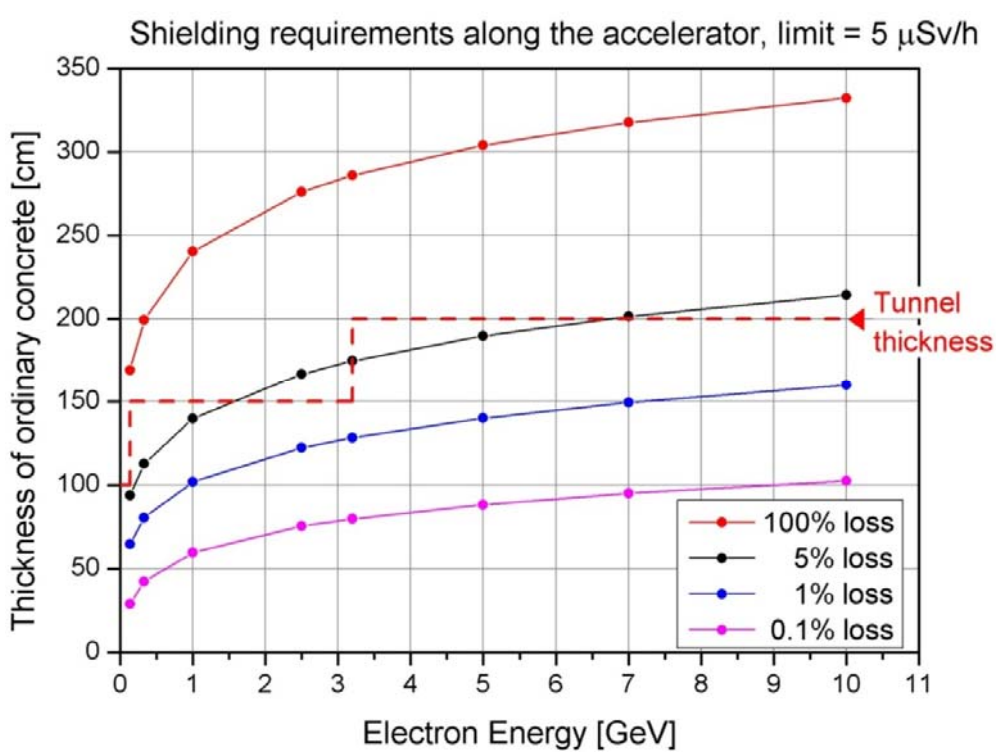

Figure 2. Required thickness along the accelerator at different energy and loss condition.

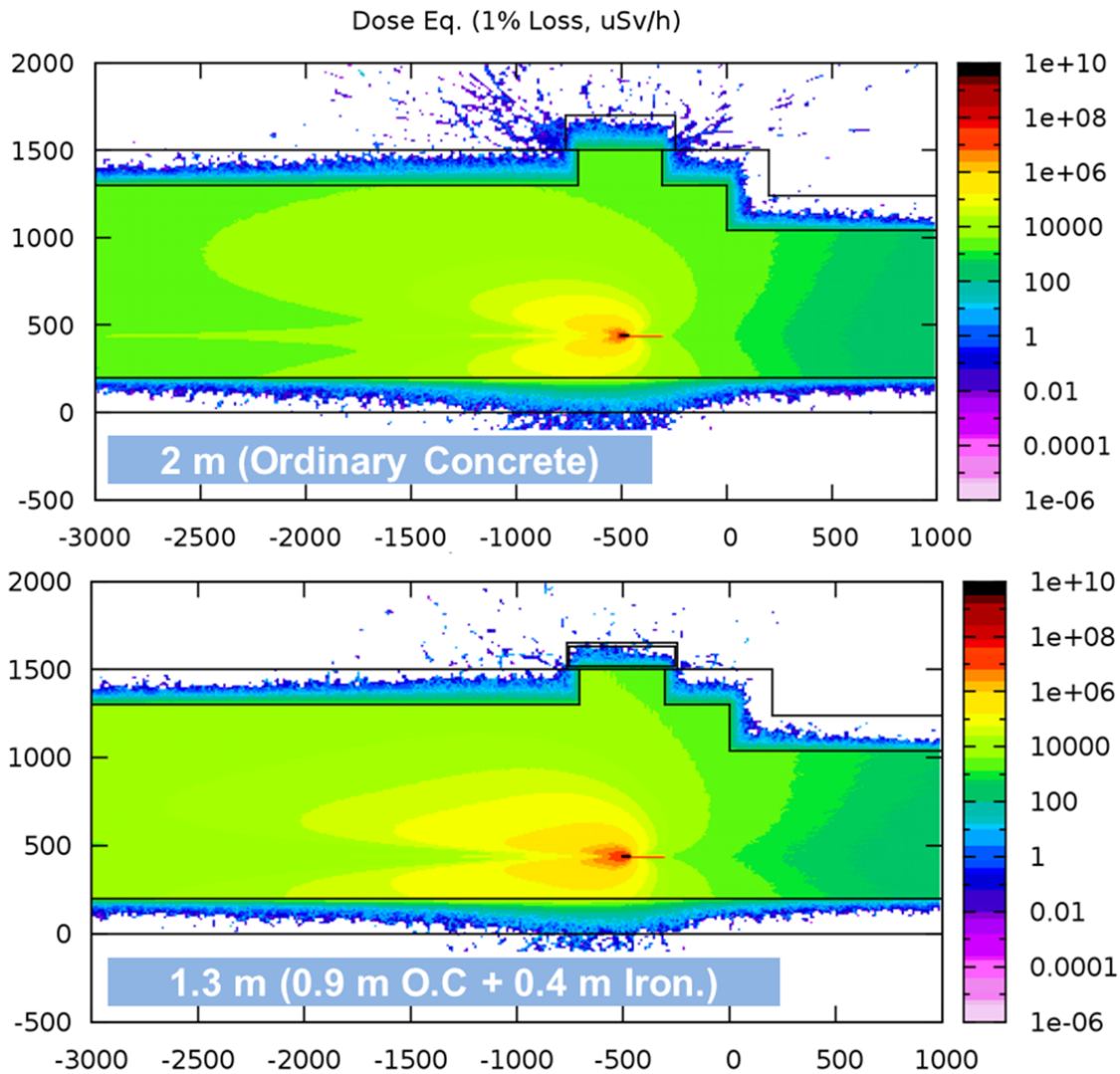

Figure 3. Calculated dose equivalent distribution to design the sliding door entrance at the HX BTL section with assumption of 1% beam loss. Upper : 2 m ordinary concrete sliding door, Lower : 1.3 m sliding door.

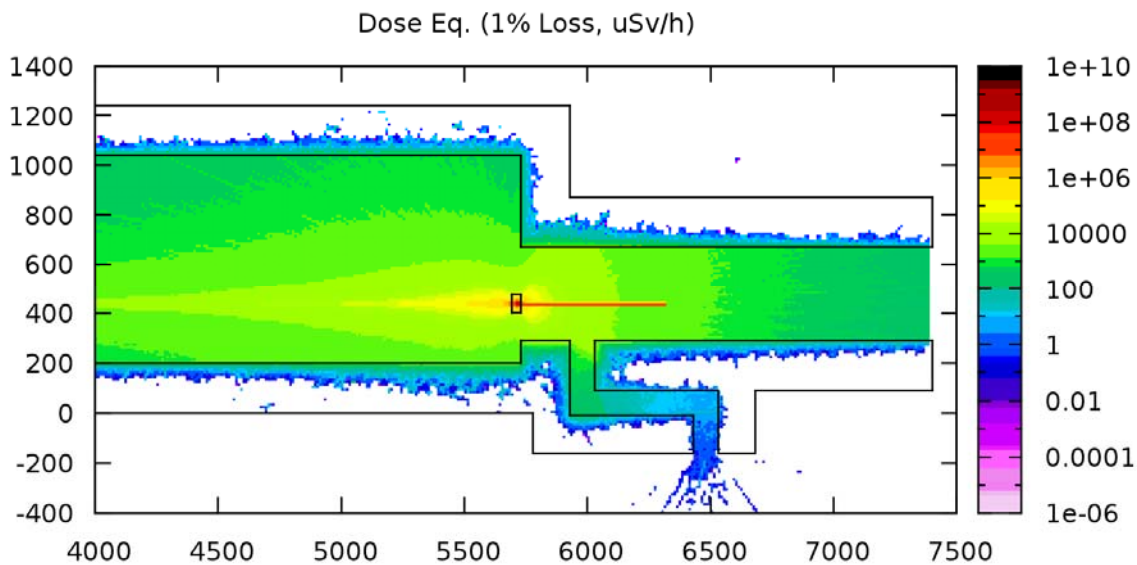

Figure 4. Calculated dose equivalent distribution to design the maze entrance at the HX linac end with assumption of 1% beam loss.

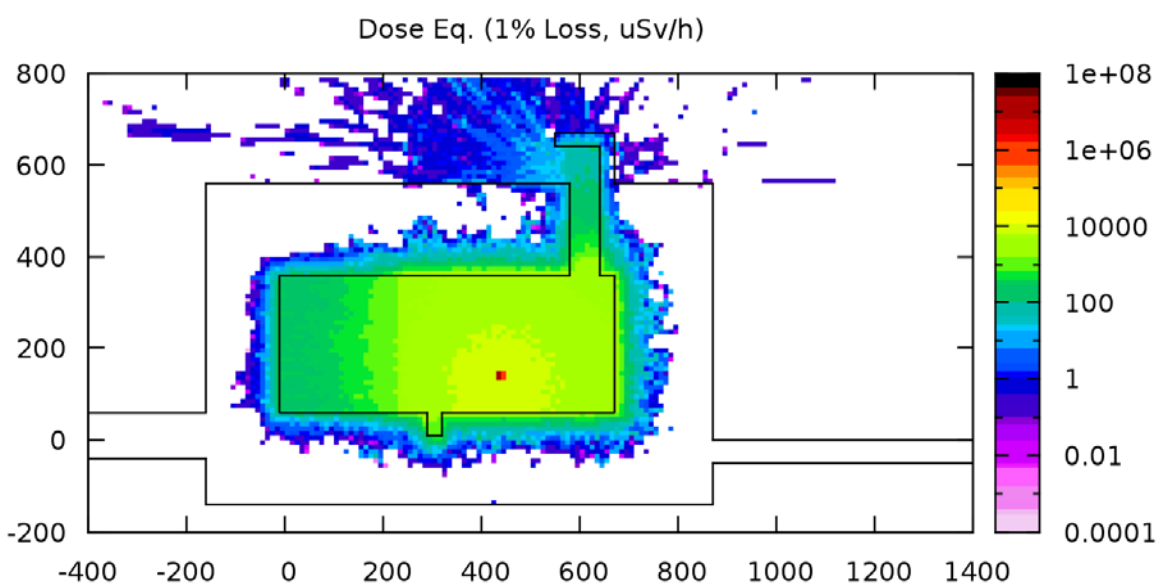

Figure 5. Calculated dose equivalent distribution to design the ceiling duct at the HX linac end with assumption of 1% beam loss.

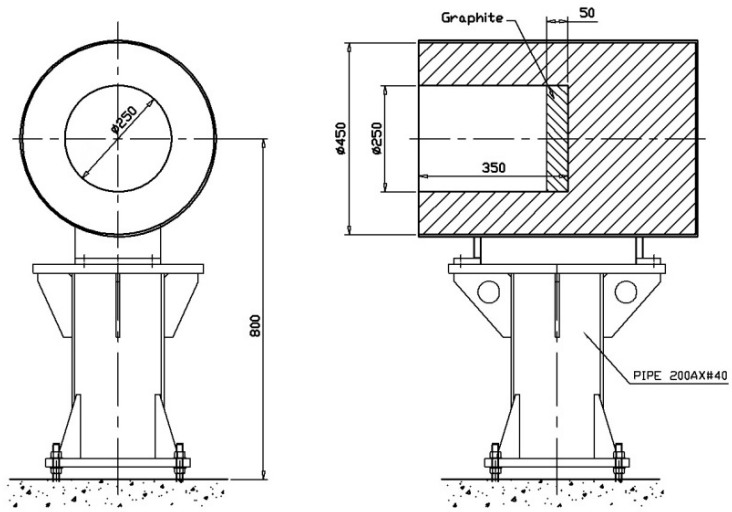

Figure 6. Design of the ITF beam dump. Total length is 650 mm.

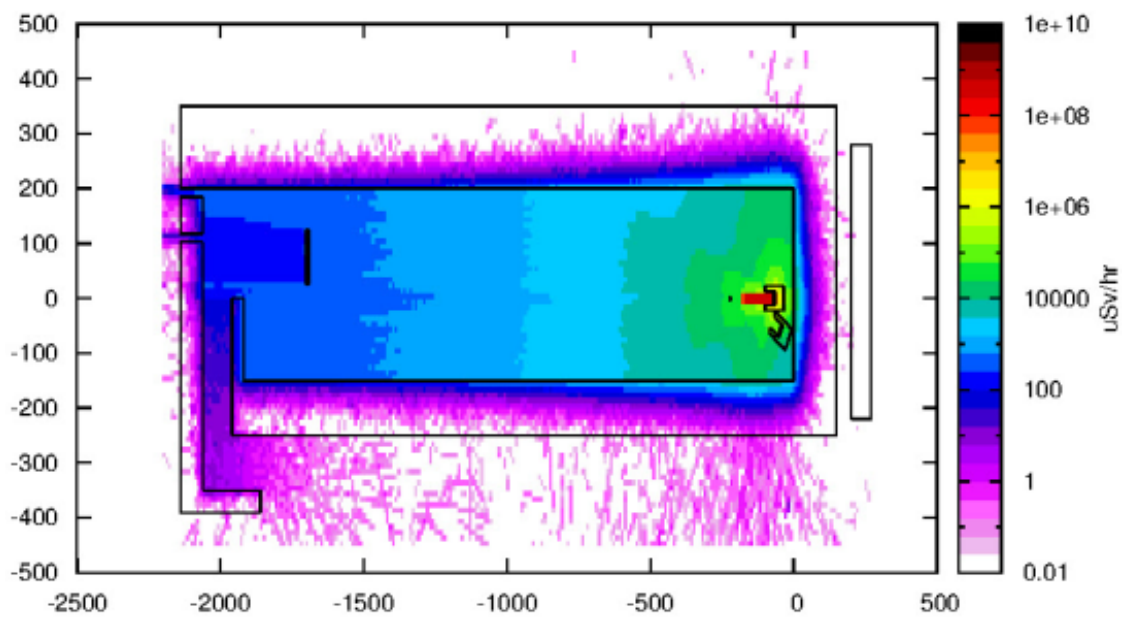

Figure 7. Calculated dose equivalent distribution to design ITF beam dump. Upper : plan view, Lower : elevation view.

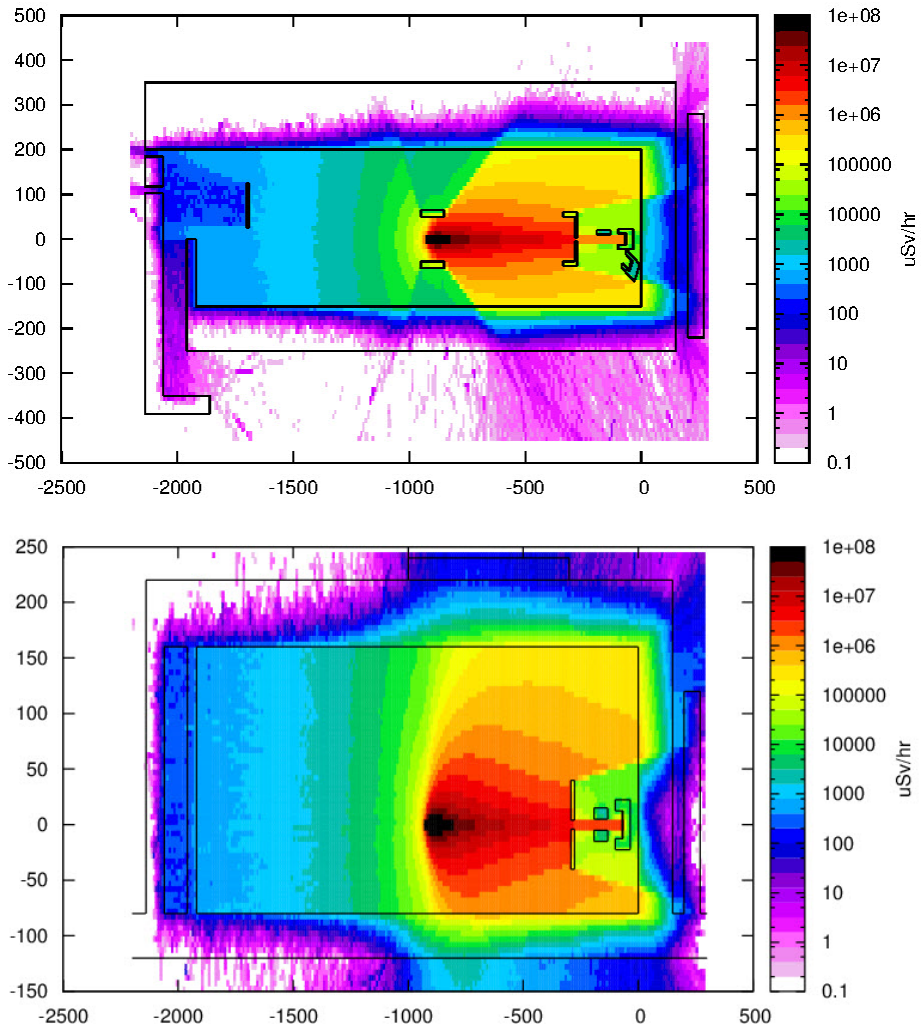

Figure 8. Calculated dose equivalent distribution for the accidental case. Concrete wall was installed at building outside and lead shields were installed at tunnel inside.

Table 1. Result of the radiation dose rate calculation using MCNPX code.

Beam direction	Maximum doserate [μSv/h] (Photon doserate)
Forward	0.15±0.15 (0.01±0.01)
Left	< 0.01 (< 0.01)
Right	0.63±0.25 (0.17±0.02)
Upper	6.43±0.51 (2.99±0.09)

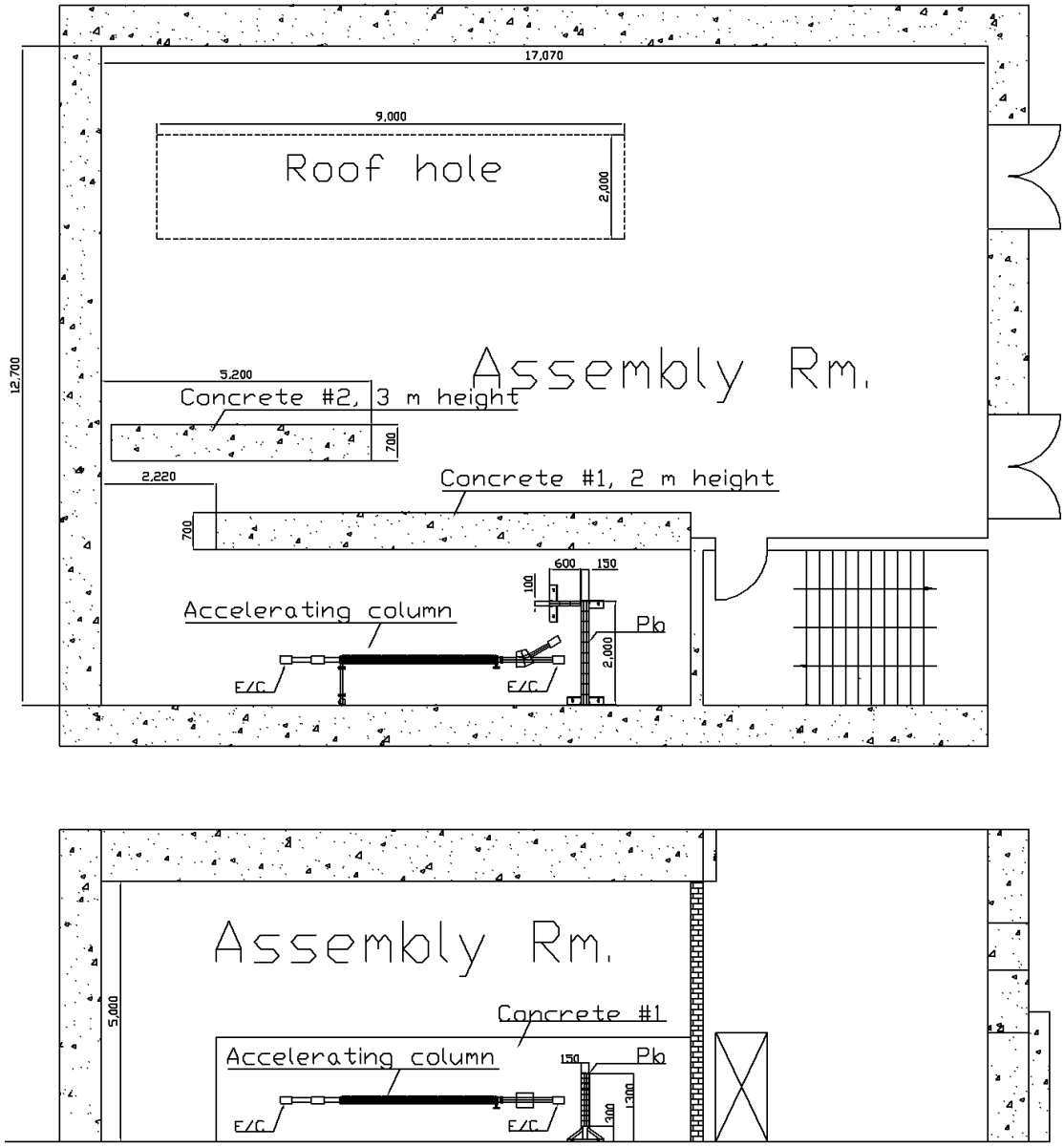

Figure 9. Design of the ATF. Maze entrance to access the accelerating column was applied and lead shield to suppress the radiation toward the stair hall.