The Design of Radiation Safety Access Control System for the Taiwan Photon Source

Chien-Rong Chen[1], Yu-Chi Lin[1], Rong-Jiun Sheu[2], Ang-Yu Chen[1*]

[1]*National Synchrotron Radiation Research Center, Hsinchu 30076, Taiwan*

2Institute of Nuclear Engineering and Science, National Tsing Hua University, Hsinchu 30013, Taiwan

Abstract

The Taiwan Photon Source (TPS) will be a 3-GeV light source with a circumference of 518.4 m and operated in top-up mode with 500 mA in the near future. It will provide synchrotron light in extremely high brilliance and low emittance. To prevent the workers access to hazardous areas where radiation can exceed permissible limits during machine run, a radiation safety access control system (ACS) must be applied. This paper presents the specification and configuration for the ACS designed for TPS. The general requirements, guidelines and structure, search procedure, terminated, critical and inhibiting devices, functional and communication, design considerations for the ACS are discussed. Finally, some findings about the ACS safety program are shown.

1. Introduction

According to the design parameters of the TPS, it will be a 3.0 GeV light source with a circumference of 518.4m and operating fully at 500 mA in top-up mode [1]. It's aiming to provide synchrotron light with extremely high brilliance and low emittance of less than 2 nm-rad. The accelerator system consists of a pre-injection of 150 MeV LINAC, a booster ring to ramp the energy of electron up to 3 GeV, and a 3 GeV electron storage ring. During accelerator operation, the lost high-energy electrons will produce significant radiation following the electromagnetic cascades. This results in radiation safety concerns.

To ensure that users and workers not exposed to various types of hazardous radiation, a Radiation Safety System (RSS) is designed [2,3]. This system is a vitally important safeguard to prevent exposure of individuals to non-permissible prompt radiation in and around the facility under normal and abnormal operating conditions. Necessary features such as reliability, redundancy, independence, testability and fail-safe must be fulfilled from early desing stage. In addition, periodic certification and checks of the integrity and functionality of the RSS shall be performed and documented to assure performance after installation and commission. The practical RSS is composed of two subsystem, Access Control System (ACS) and Radiation Control System (RCS). The basic configuration of TPS RSS is shown in fig.1 in which the ACS is marked with the red dotted line.

The RSS of TPS is inherited and upgraded from that implemented in TLS (Taiwan Light Source) [4,5]. The ACS utilizes engineering interlock means to sure the evacuation of the high radiation region when machine is ready and prevent exposure of individuals to non-permissible prompt radiation. The ACS is composed of three subsystems, the Ring Access Control System (RACS), the LINAC Access Control System (LACS), and the Hucth Access Control System (HACS). RACS and LACS are to inhibit electron beam injection and performing their intended functions until personnel have left the area and all entryways are closed. HACS is designed to ensure that no person will expose to harmful radiation inside the beamline hutches and to provide emergency action to down the safety shutter and to dump the stored beam in case of shutter motion failure. The ACS performs two-fold function: to prevent personnel access to those hazardous areas during accelerator operation and to terminate machine operation if its integrity of protection is compromised. This paper is aimed to discuss the design and the implemetation of the ACS system in TPS. Some findings worth special attention are shown at the end.

2. Design guidelines

The ACS is a vitally important safeguard of accelerator operation for personnel radiation safety. The design and implementation of ACS in TPS follows the conventions in most facilities. The recommendations of ANSI N43.1 [6] are also taken into consideration. The necessary requirements of ACS such as reliability, redundancy, independence, testability and fail-safe are fulfilled as principles in early design phase.

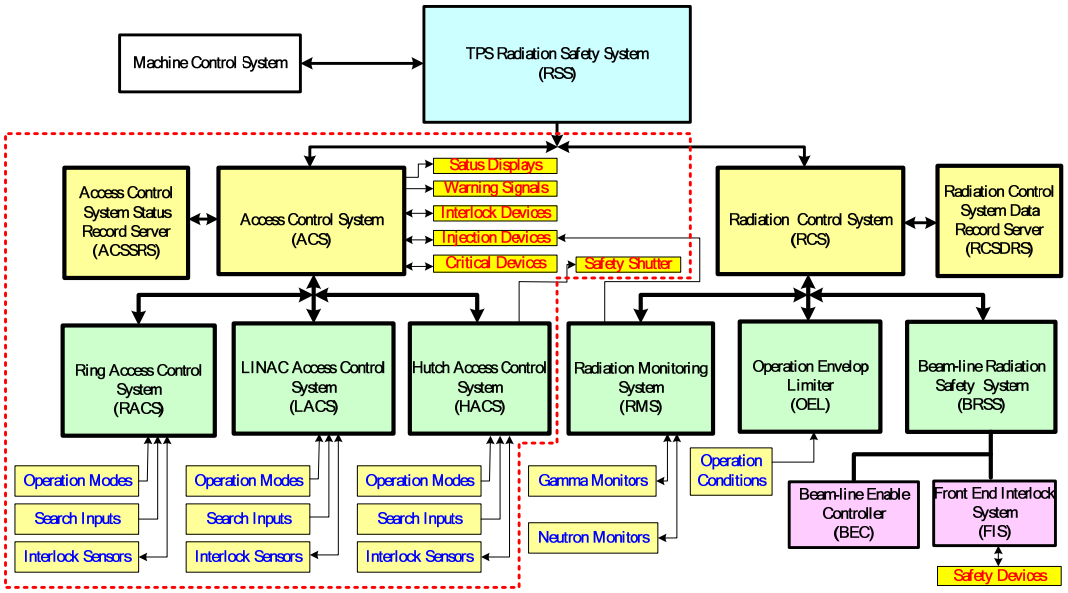

Fig. 1 - Block diagram of the TPS radiation safety system.

For the consideration of reliability, the ACS shall be reliable to perform its safety functions. It should provide the required protection subject to all foreseeable aging and environmental conditions at the accelerator facility. These conditions may include extreme weather, high electromagnetic fields, high radiation fields, earthquakes, and the cumulative effects of aging on components, such as corrosion, dirt, and normal wear. For redundancy, the ACS must be duplicated throughout and ensure that both guard-lines are operating correctly. The duplicated loops include the input devices, wiring, logic function and outputs. With two identical devices in a redundant configuration respectively, the probability of double failure is less than that of a single device. With respect to independence and diversity, each safety interlock must execute independently of any other safety interlocks. Also, loading different logics or rules on two identical devices in dulplicated loops will improve the reliability.

After installation, the system and sub-system shall be checked and assured to meet the requirement of testability. Pre-test, on-line test and readiness review is necessary. Testing is time-consuming and suffering, and automated assistant should be embedded. Considering the fail-safe, all the safety interlocks must sure that any defect or failure of components will stop the operation of the accelerator. In case of failure, the ACS shall stay in a conservative safe condition. Also, the permit of injection and beam storage shall be forbidden. If hardware failure or software fault, manual reset shall be required and the event shall be recorded. Other guideness such as expansibility, high quality and tamper-resistant should be considered. The authority to revise and modify the configuration of the system shall be assigned. The formality and detail of the configuration control programs should be suitable for removing the hazards and complexity of the facility.

3. System design and implementation

3.1. System design

The ACS is an engineering method to operate high energy accelerator confidently under safety condition. It is mainly an engineered and interlocked-type system to achieve the goals of radiation safety and access control. Here we describe the interlock logics and sophistication of ACS in TPS.

The primary area controlled by the ACS in the TPS is a circular concrete-housing tunnel. To facilitate the software and hardware, the controlled area is divided into five zones as shown in fig.2. Five respective labyrinth entrances provide personnel access to five search divisions. Major ACS components such as door locks, search check points and emergency buttons are also marked in fig.2. Position sensors of Door or movable shielding blocks and push buttons to stop machine operation are essential and integrated into the

ACS. These five radiation controlled segments are arranged according to a practical search process to ensure no personnel left behind. During machine operation, the circular shared tunnel and the independent LINAC room are marked as the entrance-forbidden regions due to the high radiation. Each region has its own search route and procedure to secure the corresponding region. The locations of radiation monitors shown in fig.2 are pre-chosen to be close to the possibly radiation hot spots such as the posittions of the RF, and exit of the labyrinths, etc,.

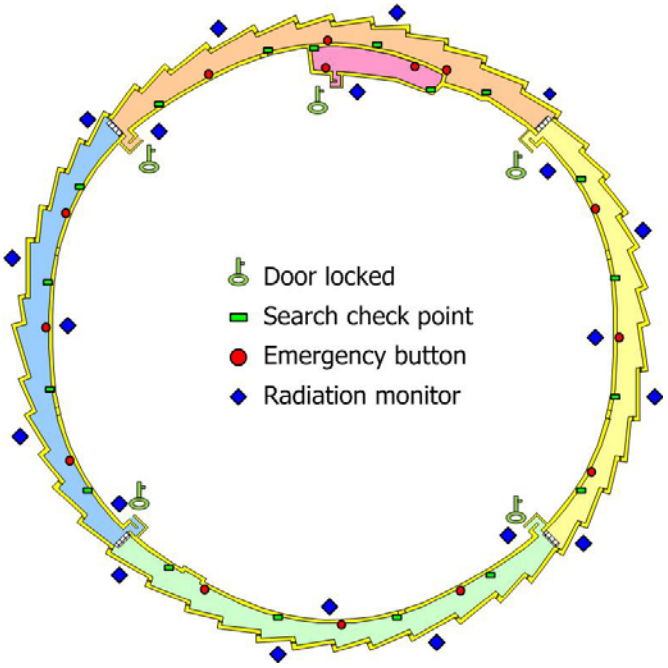

Fig. 2 - Divisions and relative devices in TPS accelerator enclosures.

Some assemblies or systems of TPS should inform machine/system status and obey the control signal from ACS to prevent the prompt radiation exposure. These components include LINAC and associated RF system, bending dipole inside the LINAC area, beam stopper at LTB (LINAC to booster) transfer line, RF system for booster, power supply of the bending dipole at BTS (booster to storage) transfer line, RF and dipole power supply for the storage ring. Some assemblies of RSS such as beam shutter, radiation monitors and operation envelop limiter are also related.

While the injection efficiency is below requirement, RSS will forbid the top-up mode operation. While emergency button acted, forced in or out, the ACS wll discontinue the RF system for storage ring. If high radiation alarm signal is detected, RSS will shut down the electron beam and associated RF system of LINAC. LTB beam stopper is also down to stop the electron transfer and LTB dipole will be set to bend the electron from LINAC to beam dump even beam generation had been terminated.

Fig.3 shows the singal flows of ACS for the booster/storage rings. If the position sensors of door or movable shielding blocks are actuated during operation, ACS will stop injection and dump the beam in the ring immediately. The operator could restart the beam injection only after recovering all the related doors or shielding blocks and serach procedure is done. Four divisions segmenting the shared tunnel can be secured separately. The operation of either booster or storage ring can be promised only when all four divisions of the shared tunnel are secured. With any of them failed to meet the interlock requirements, the stored beam will be dumped immediately and the prompt radiation generation are ended then. The interlock for the operation of LINAC is similar to that for booster/storage rings. The LINAC can be operated alone under condition that the bending magnet functions correctly, beam dump in place, and the beam stoppers in LTB are closed to isolate the region from the main tunnel. Heavy metal shutter (HMS) is an important beamline control safety device to block the hazard radiation and useful synchrotron light produced inside tunnel from passing the ratchet wall via the beam-line. It’s the user’s duty to finish the search and lock the door of their experimental hutch before utilizing the light source. If the safety interlock for the hutch is actuated, such as

the door is opened accidently, search not completed, the HMS will not be lifted to deliver the synchrotron light.

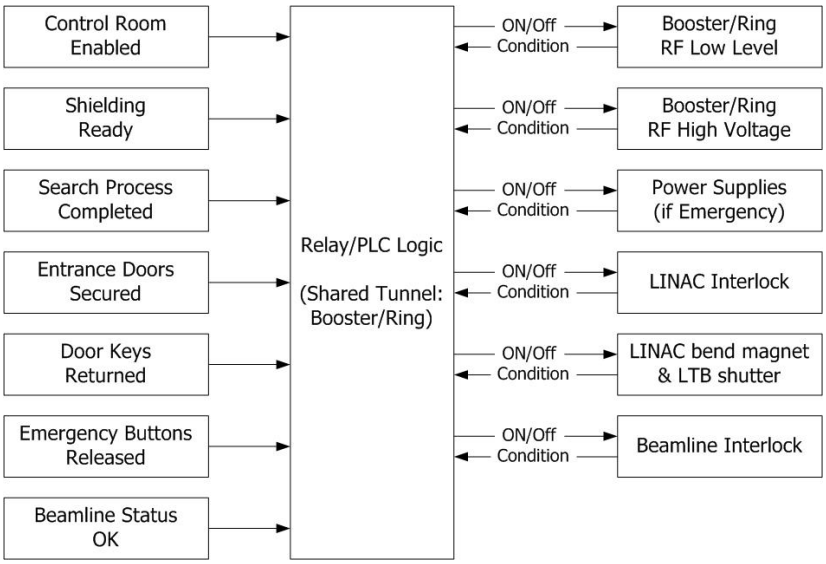

Fig. 3 - The block diagram of a single chain of radiation safety interlock system for the booster/ storage ring in the shared tunnel.

To meet the requirements of independence and redundancy, the chains and devices of ACS for LINAC and the booster/storage rings in the shared tunnel are all duplicated and doubled. A top-level PLC connects and collects the information and status from the two independent loops (A and B). Indicator billboards are located at the entrances of five mazes, the control room and other area. They show the information about the status of linac, booster/storage ring. Personnels can easily assess the conditions inside the concrete housing.

ACS defines three modes of the TPS operation – shutdown, search and operation. The five separate controlled zones with disparate authorization of access are identified according to their levels of radiation during various operating modes, including prohibited, restricted and free access. When machine is in shutdown mode, all the five divisions can be free access. If TPS is in search mode, these divisions are restricted. Operators must follow the search process, which is shown in fig.4, to evacuate all the five divisions.

After operator in charge switches the TPS operation mode from shutdown to search, ACS will broadcast a warning message and the on-site illumination will be darkened for 30 seconds to caution all the personnels inside the tunnel. Once the serach is done, the message will be announced again with different content. The operator shall lock all the control doors and implement a search according to a planned route to ensure that no personnel stays in the prohibited areas. There are search buttons locate on the inner shielding wall. During the search, the operator shall press the search buttons locate on the inner shielding wall sequentially. Time limit to complete the search of single division is estimated to be 10 minutes now, and might be adjusted in the future. The purpose to limit the search time is to ensure that no other activities are still processed while the accelerator is ready to go.

The accelerator components will be allowed to be activated only after the patrol inspection is done. During machine operation, enter the high radiation areas is prohibited. If somebody still inside these interlock zones, emergency buttons with clearly visible indicators provide a way to terminate the machine operation immediately.

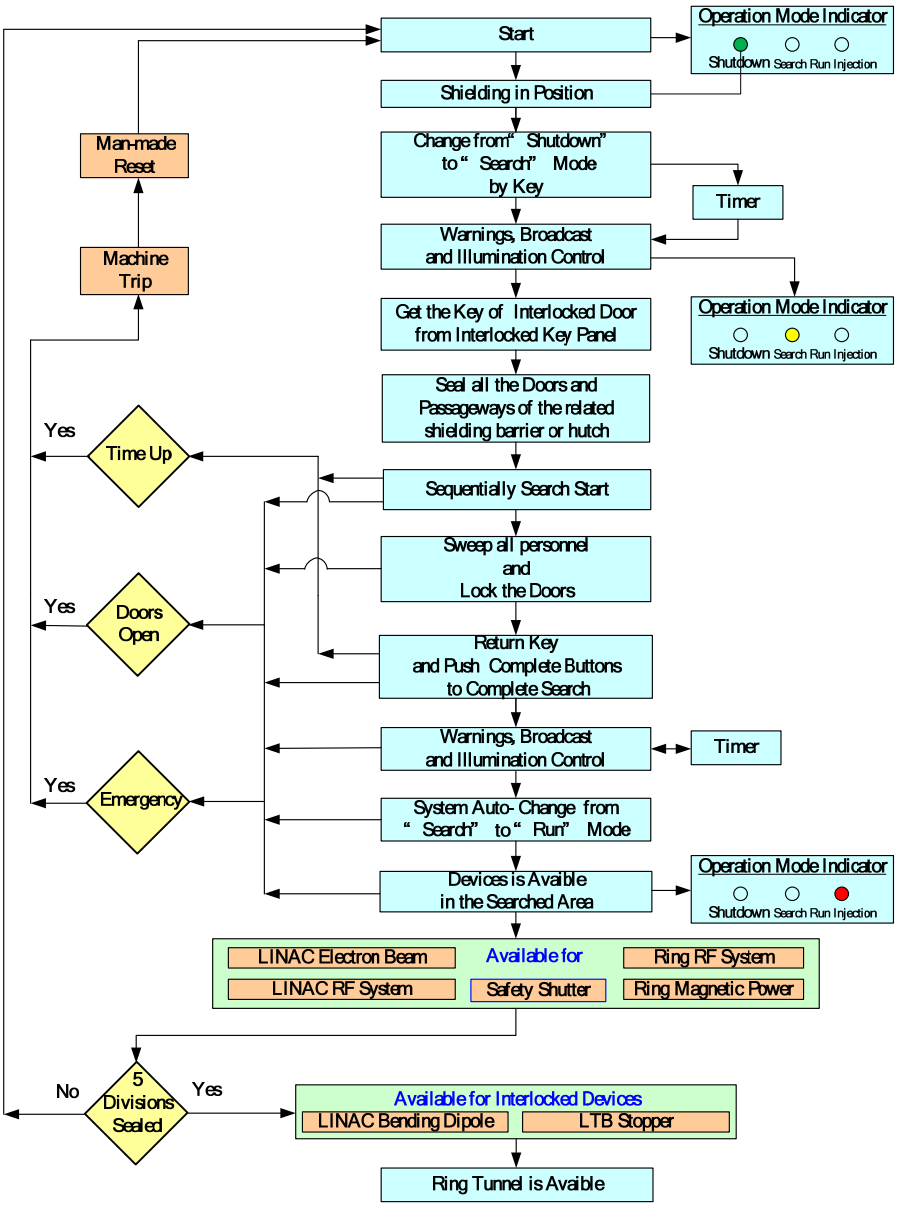

Fig. 4 - Flow chart of Search Procedure.

3.2. Implement of ACS

To construct a radiation safety system such as the ACS, special attention must be paid in some details. Under the requirement of reliability, the qualified safety-rated PLC devices shall be introduced. Nonvolatile memory must be adopted for software. To free from the non-predicable trouble and errors, simultaneous executions of multiple programs on a single platform must be cautioned. Fig.5 shows the network diagram of ACS of TPS. The network configuration for ACS is dedicated to avoid the interferences from external. The system is completely isolated from such networks, including the World Wide Web. The information from ACS to public is passed by an independent server. The data flow is only one-way transmission from bottom to top. The wiring of the ACS network and control shall be shielded by the electrical-metallic tubing (EMT) or metal hose tube followed the industrial safety guideline. The remote control about the Safety PLC of ACS is disable to prevent the incorrect operation. Program administrator (watchdog) shall be used to inspect the condition of execution. Any update or upgrade about the software and hardware shall be processed under control and in closely confinement. The authority and responsibility of the system maintenance shall be

assigned. Any change or modification about the elements and devices of RSS (so the ACS) shall meet the requirement of redundancy. Only after review and approved, the change and modification in the shielding and RSS interlock device shall be conducted. The work shall be executed under the supervised of both the operation group and radiation safety professional.

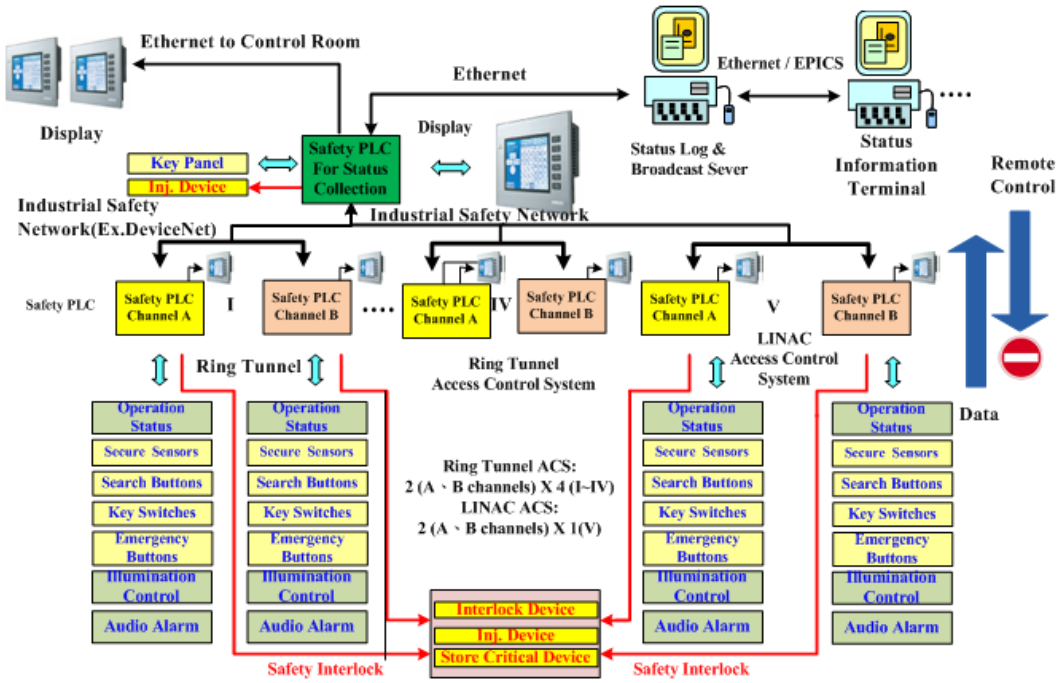

Fig. 5 - Network Diagram of ACS for TPS.

Any defect or component failure in the safety system shall result in the accelerator trip. The accelerator will be allowed to run under the condition that the causes of trip are all clear and all the breakdowns are excluded. All scram or emergency buttons in high radiation areas shall be located in easily accessible position. A manual reset shall be included so that operator can restart the accelerator only after the arrangement inspection and pressing the button on-site.

Related document should be in highly completeness and accessibility. The periodic certification and checks must be carried out. Additional to the emergency electric power source, a sufficient uninterruptible power supply (UPS) shall be provided.

4. Findings and Discussion

The detail design had been finished. With experiences gained from the LINAC testsite in TPS[ref], some features and findings about the installation and operation worth to pay special attentions.

This interface specification is very important and shall be kept the same in all the elements and devices in system. The ACS in TPS uses analog signals as inputs and outputs between the devices. The signal level is the voltage level, 0 or 24Vdc. The voltage drop and signals attenuation in long wiring must be concerned especially for a huge ring. Since most relays, sensors and elements have lower limit of excitation. The definition and practice about the fail-safe are quite different between the industrial control safety and radiation safety. For safety in industrial control, the fail-safe means the backup for the control system only. However, for radiation safety in ACS, fail-safe is duplicated, parallel and double checks throughout whole system. An examination and review procedure shall be followed to ensure that changes or additions to the ACS meet the requirements of fail-safe.

At TPS, the 518 m circular shared tunnel is divided into four sub-regions. To divide large area into small pieces saves the time to recover the failed local device and search process. The effect of time-saving also depends on the operation schedule. For long cycle operation, to segment gives little benefit. After pressing the search button, a local alarm audio will sound in few ten seconds. This makes a good warn to

person who stay in that area. All controls, instruments, and readouts must be clearly identified and functional on the accelerator control console. General safety not related to radiation shall be considered. The measures should be incorporated into radiation safety system in the design and operational stages. What to be considered are high voltage, RF power, and dark current on vacuum piping. The failure or incorrect-action might be caused due to the radiation-induced degradation. Material with high radiation-resistance must be utilized in the wiring and components in high radiation field.

The synchroton light source from TPS will be opened to users in 2015. All the construction and installation of the TPS systems must be completed and finish comissioning before the date. The commissioning of radiation safey ACS of TPS is planned to be in the end of this year. The ACS will be ready to provide the function of radiation protection from the very beginning of the system pre-operation testing.

References

[1] R.J. Sheu, J. Liu, C.R. Chen, F.D. Chang, K.S. Kao, M.S. Chang, J.P. Wang, "Taiwan Photon Source (TPS) Design Handbook", National Synchrotron Radiation Research Center, January 2009.
[2] C.R. Chen, F.D. Chang, J. Liu, J.P. Wang, R.J. Sheu, S.P. Kao, " The Radiation Safety Interlock System for Top-Up Mode Operation at NSRRC", Particle Accelerator Conference, Knoxville Convention Center Knoxville, Tennessee, U.S.A., May16~20,2005.
[3] J.C. Liu, C.R. Chen, S.P. Kao, F.D. Chang, R.J. Sheu, "Conceptual Design of Radiation Safety System for Taiwan Photon Source", 4th International Workshop on Radiation Safety at Synchrotron Radiation Sources, Canadian Light Source, Saskatoon, SK. Canada, June 6-8, 2007.
[4] J.P. Wang, C.R. Chen, S.H. Jiang, "Radiation shielding design for SRRC", Synchrotron Radiation Research Center, Hsinchu, Taiwan, 1989.
[5] T.F. Lin, J.P. Wang, "The Safety Interlock System of Synchrotron Radiation Research Center", Synchrotron Radiation Research Center, Taiwan, (1996) , IEEE P.2108~P.2110.
[6] ANSI N43.1 Standards, Radiation Safety for the Design and Operation of Particle Accelerators, 2011