Bremsstrahlung Measurements at FLASH

Wolfgang Clement, Albrecht Leuschner
Deutsches Elektronen Synchrotron DESY, Hamburg, GERMANY

RADSYNCH13, BNL, May 2013

HELMHOLTZ
ASSOCIATION

DESY

Outline

- DESY-Overview
- Free Electron Laser FLASH
- Dose Rate Meter LB 6419
- Measurement 1: Dump Dipole OFF
- Conclusion 1
- Measurement 2: Closed Valve
- Conclusion 2

DESY: Overview

DESY: Overview

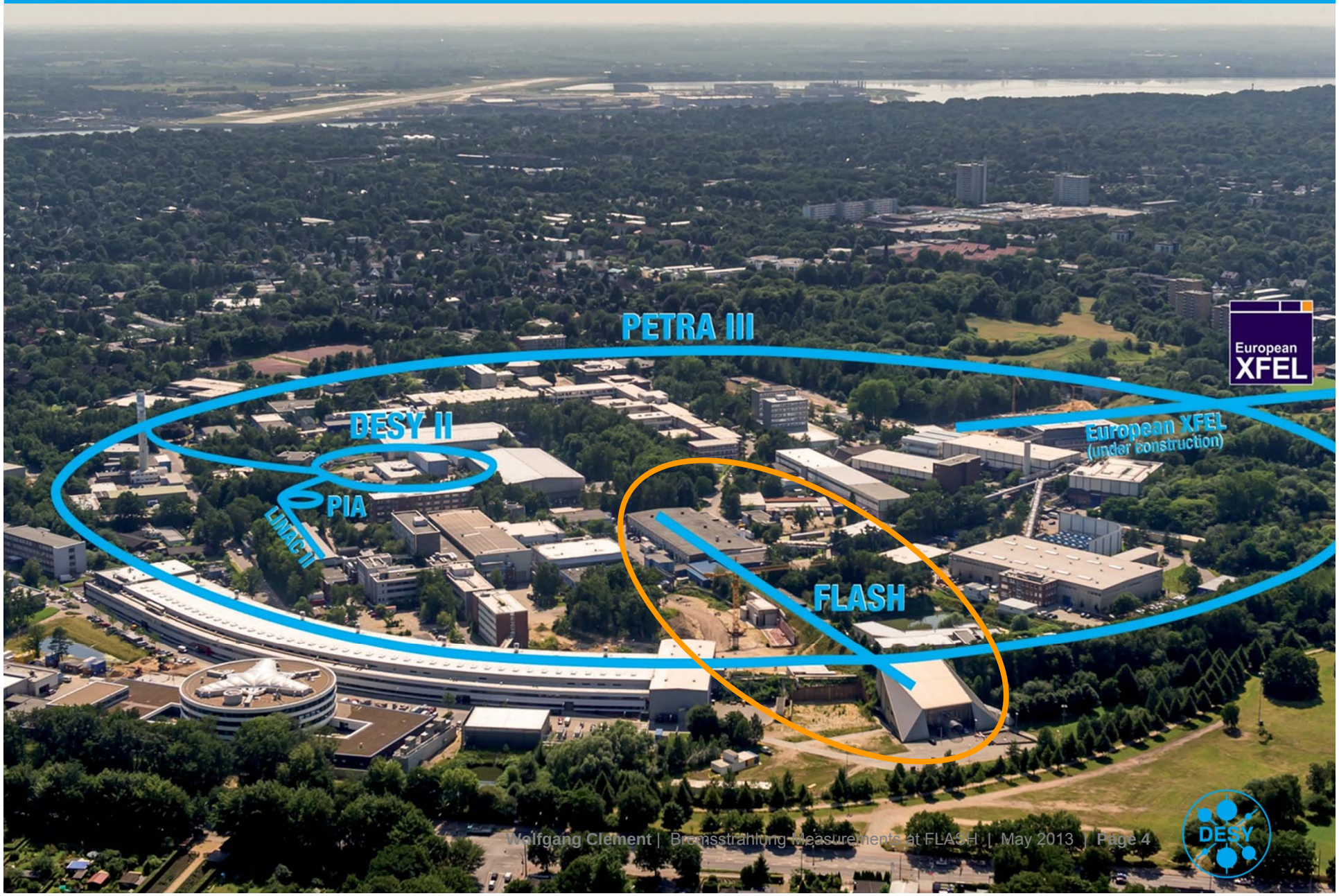

FLASH: Machine Parameters

> FLASH = Free electron LASer in Hamburg

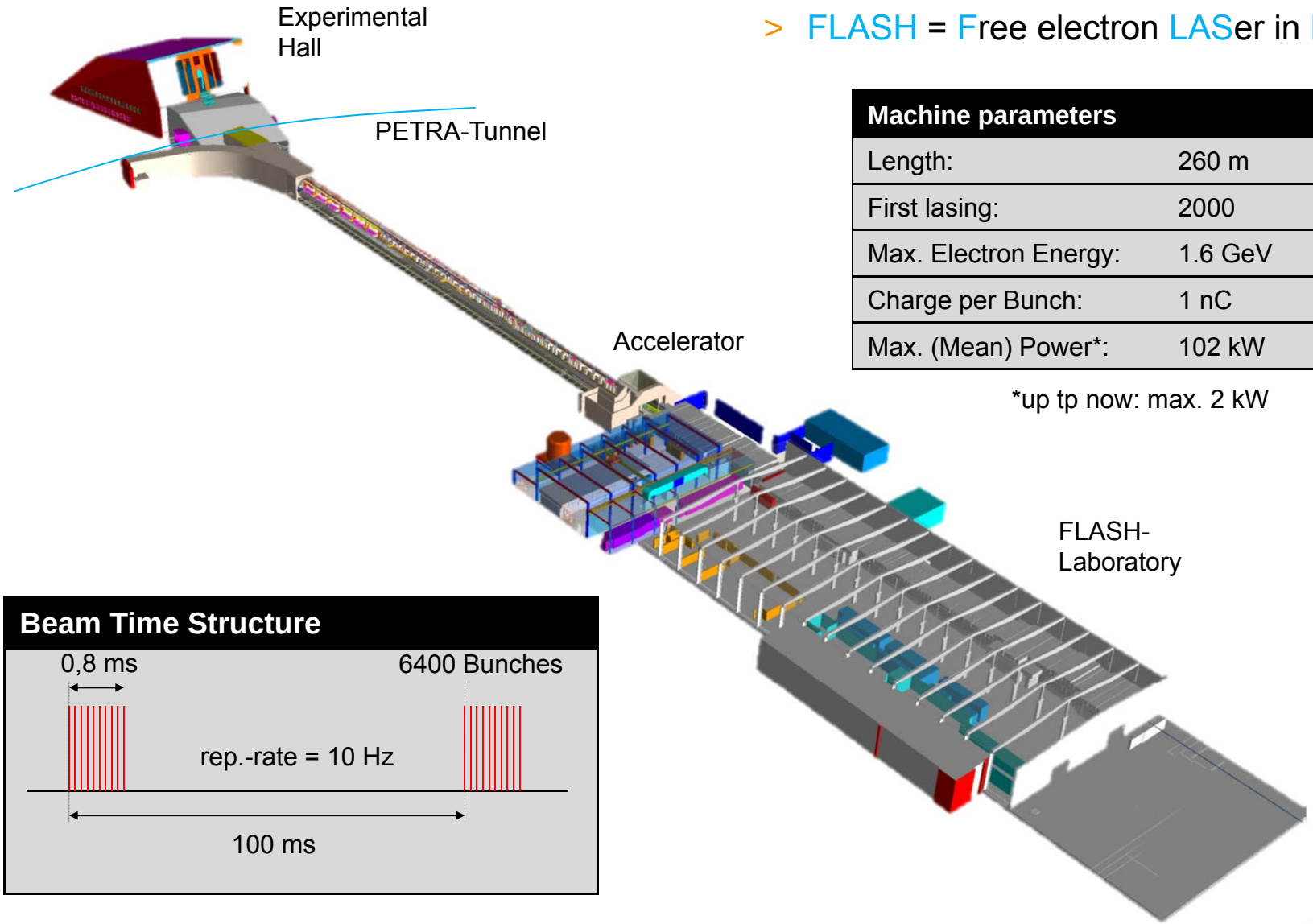

Machine parameters	
Length:	260 m
First lasing:	2000
Max. Electron Energy:	1.6 GeV
Charge per Bunch:	1 nC
Max. (Mean) Power*:	102 kW

*up tp now: max. 2 kW

Beam Time Structure

Schematic overview of FLASH Machine

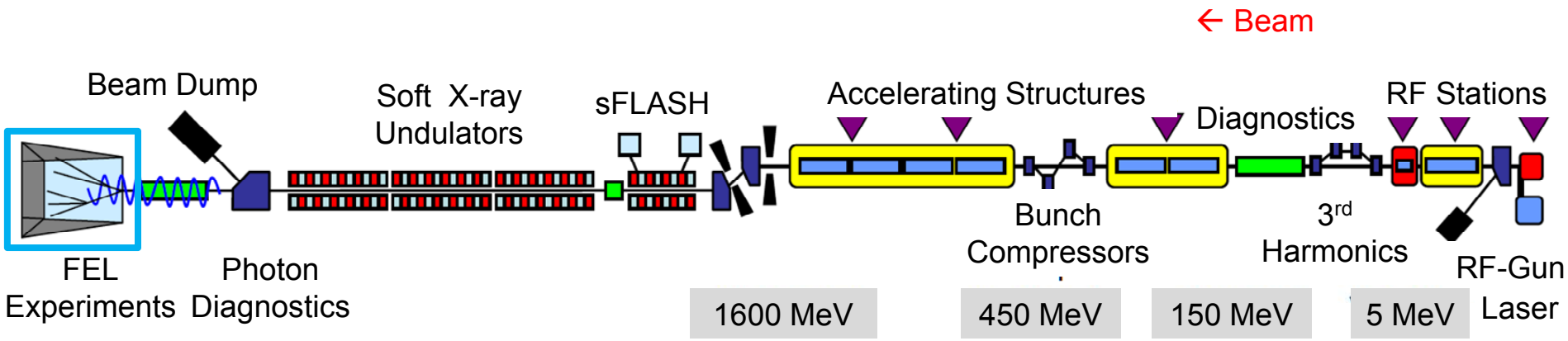

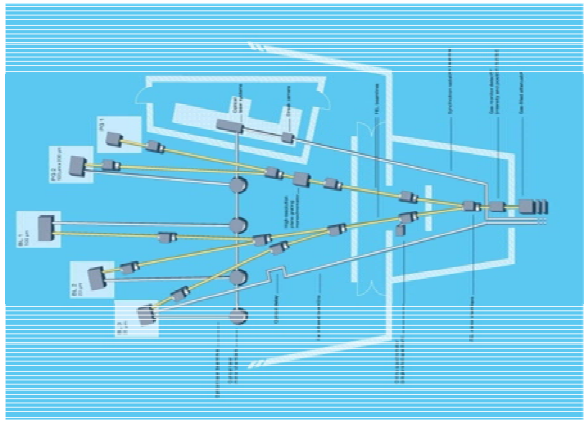

Output parameters FLASH FEL Radiation	
Wavelength (fundamental)	4 - 45 nm
Average single pulse energy	10 - 400 µJ
Pulse duration (FWHM)	50 - 200 fs
Peak power (from avg.)	0.7 – 2 GW
Spectral width (FWHM)	0.1 – 1 %
Peak Brilliance*10 - 40 nm	10^{28} – 10^{31}

Future: FLASH II

- Construction of **FLASH II** in progress
- Additional variable-gap undulator in a separate tunnel
- Double number of experimental stations

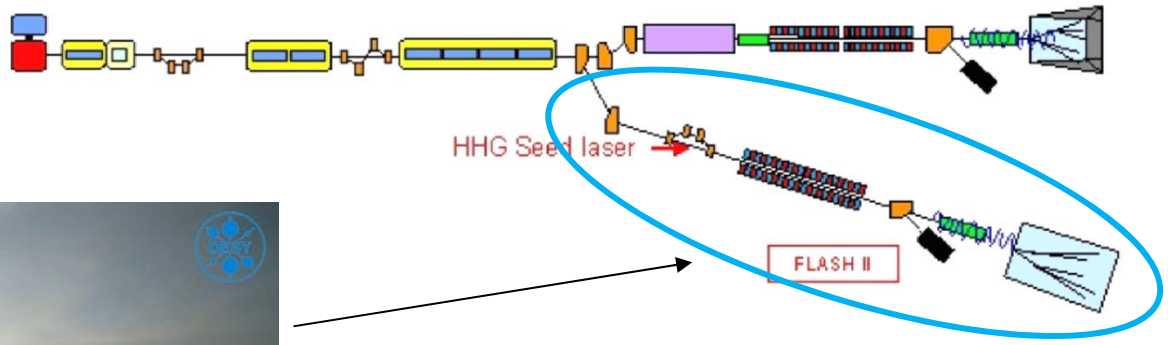

FLASH II Webcam, construction site, April 24th 2013

Expected output parameters for FLASH II.		
Photon Beam	HHG	SASE
Wavelength range	10 - 40 nm	4 - 80 nm
Average single pulse energy	1 – 50 µJ	1 – 500 µJ
Pulse duration (FWHM)	<15 fs	10 – 200 fs
Peak power (from av.)	1 – 5 GW	1 – 5 GW
Spectral width (FWHM)	0.1 – 1 %	0.5 – 1.5 %
Peak Brilliance*10 - 40 nm	10^{28} – 10^{31}	10^{28} - 10^{31}

Outline

> DESY-Overview

> Free Electron Laser FLASH

> **Dose Rate Meter LB 6419**

> Measurements: Dump Dipole OFF

> Measurements: Closed Valve

> Conclusion

The Detectors

> Dose Rate Meter LB 6419

- developed by DESY (A. Leuschner) , Berthold Technologies and Struck Innovative Systems; patented
- measurement of photons and neutrons in continuous and/or pulsed radiation fields
- monitoring via Ethernet, stand-alone operation, alarmrelais for safety purposes
- about 70 interlocked LB 6419 at DESY for active area monitoring
- 17 detectors involved in *Bremsstrahlung measurements*

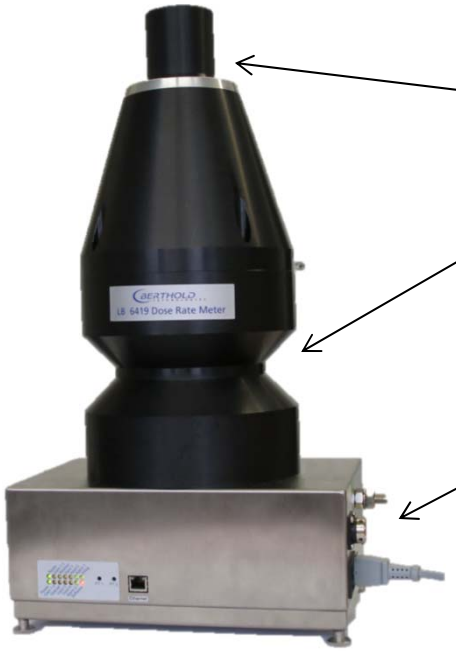

Plastic Scintillator
In a 1 cm PE Cover

^{3}He-Counter
Rem Counter Type

Electronics
Power Supplies
FADC Board
External Connections

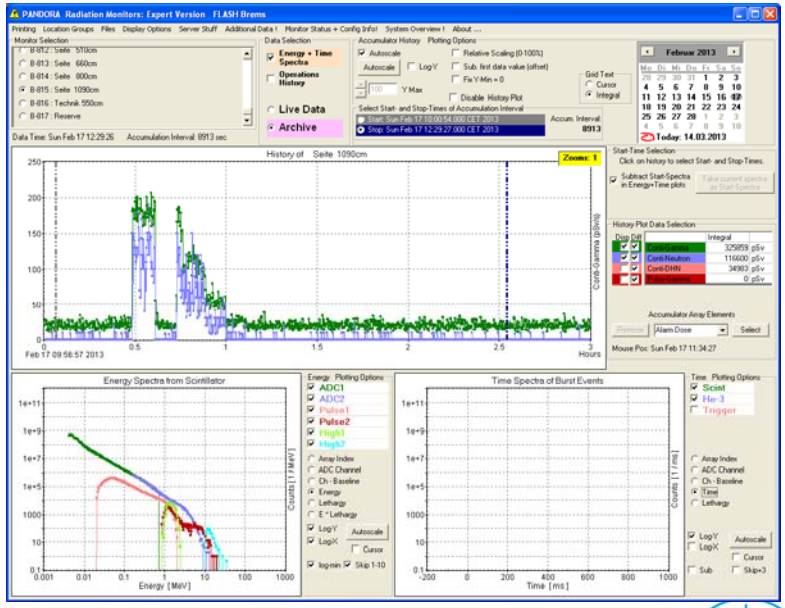

LB-6419-Positions: Beam Distribution and Supervised Area

B-809 - B-814: detectors within FBD-Area

B-815: **interlocked** detector FBD area

B-806: FBD area

B-805: „on-axis“ detector FBD area
(scintillator only)

B-808: experimental area

Outline

- DESY-Overview
- Free Electron Laser FLASH
- Dose Rate Meter LB 6419
- **Measurement 1: Dump Dipole OFF**
- Conclusion 1
- Measurement 2: Closed Valve
- Conclusion 2

Permanent Electron Clearing Magnet

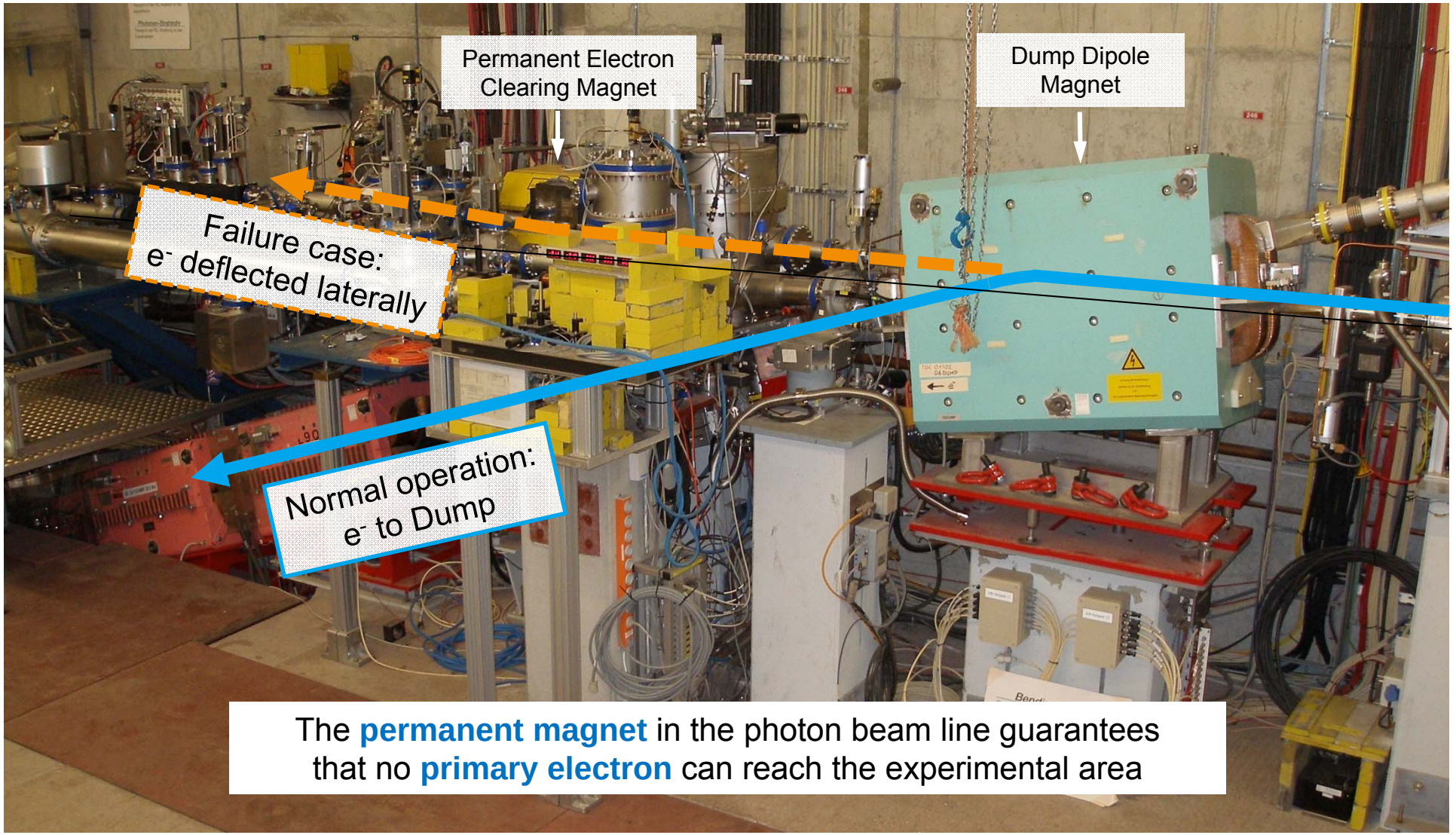

The **permanent magnet** in the photon beam line guarantees that no **primary electron** can reach the experimental area

Measurement Setup: Dump Dipole OFF

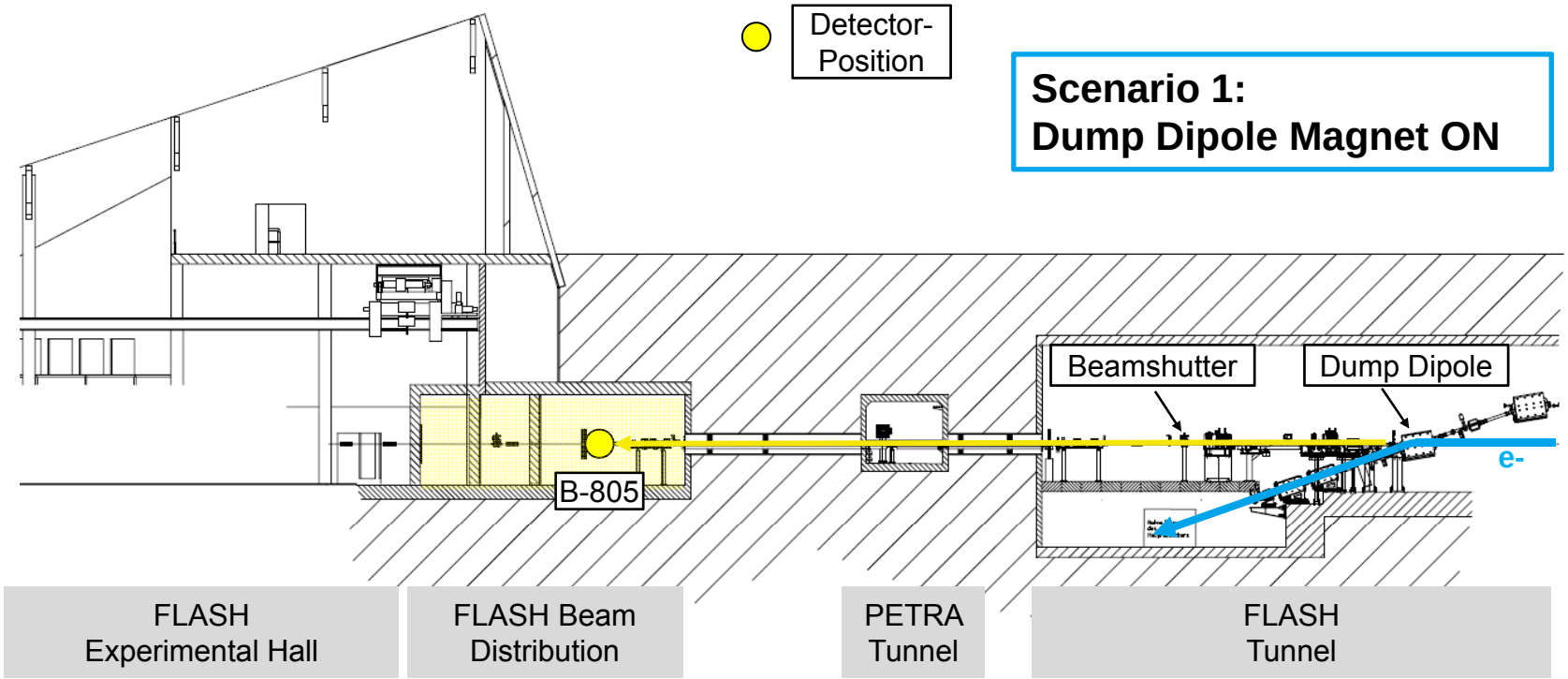

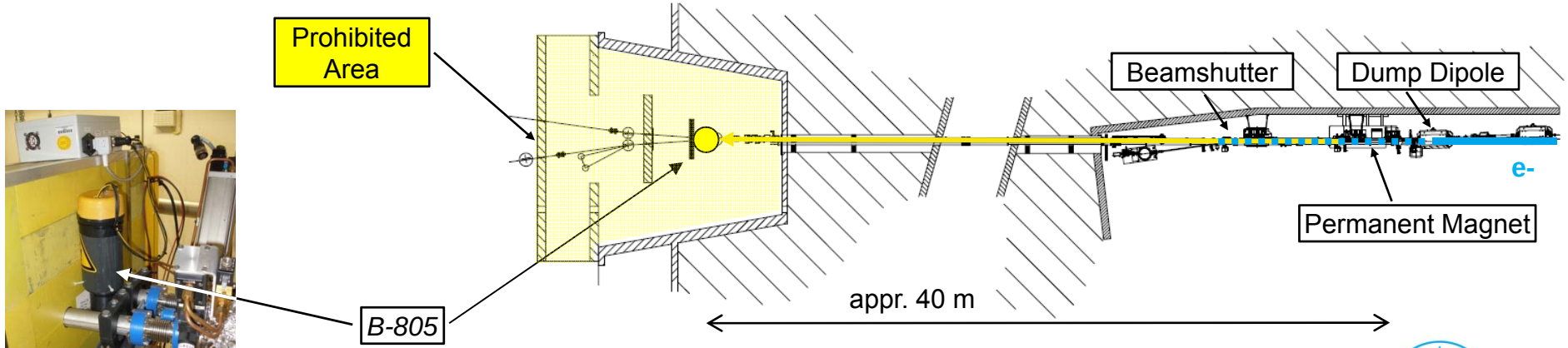

Measurement Setup: Dump Dipole OFF

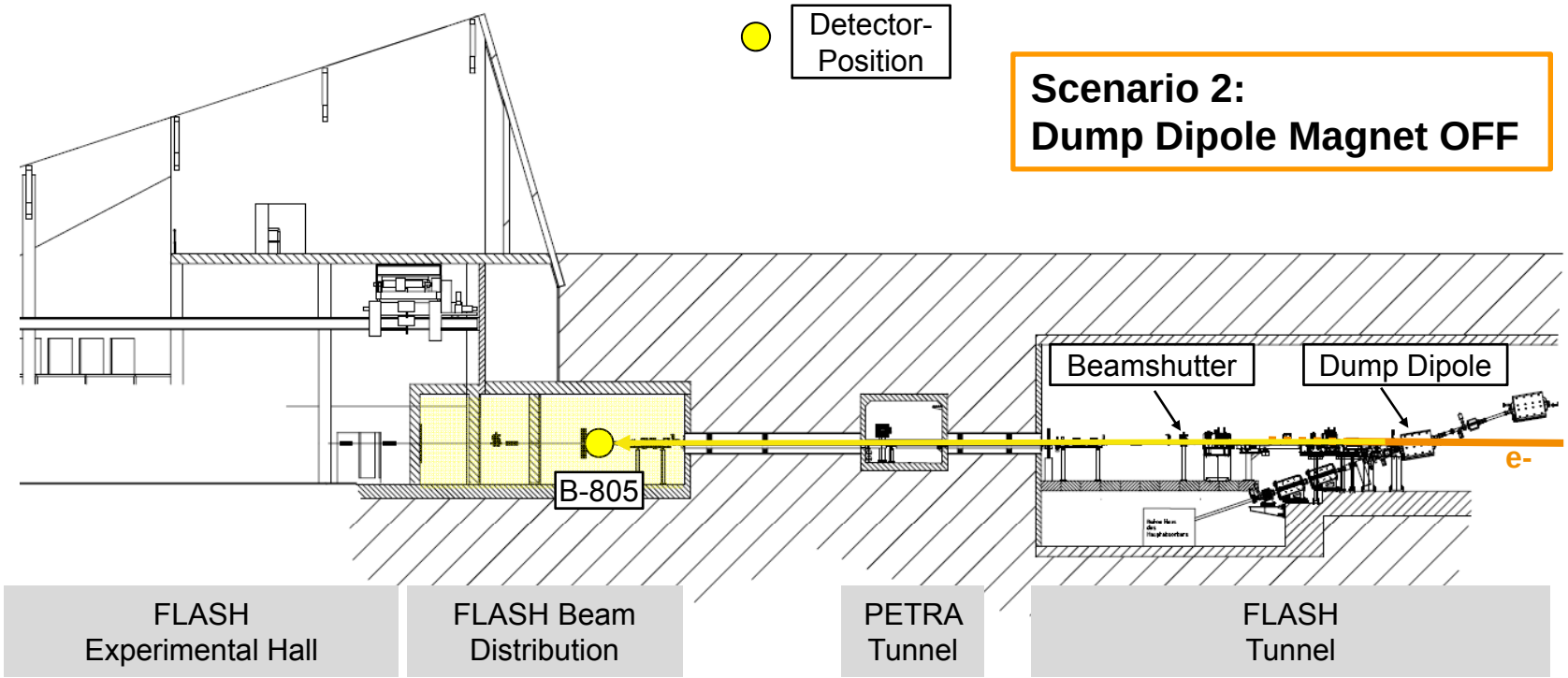

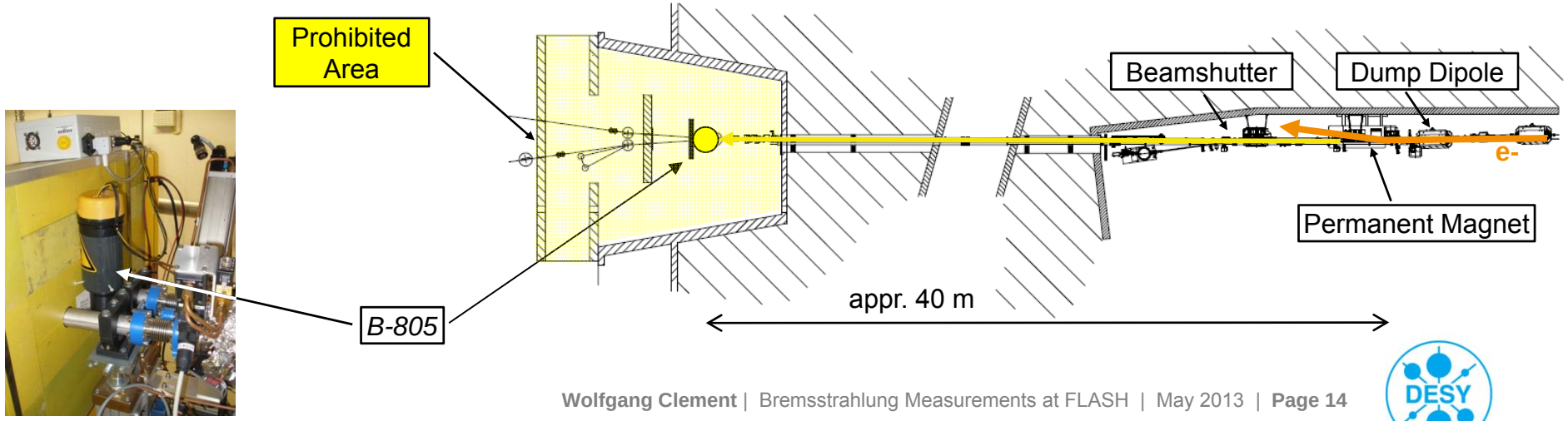

Results Dump Dipole OFF

> Results of measurements with dump dipole magnet ON vs. OFF:

		Gamma Dose Rate @ 100kW	
Position		Scenario 1: Dump Dipole **ON**	Scenario 2: Dump Dipole **OFF**
B-805	on-axis, FBD-area	285 mSv/h	280 mSv/h

> Gamma Dose Rate was measured within the FLASH Beam Distribution (FBD) Area „on axis“ of the electron beam with open Beamshutter

> The FBD-Area is a **prohibited area** when beamshutter open

> Machine operation at 1 GeV

> Dose Rate scaled from 0.05 kW to 100 kW

Scenario 1:

> Dump Dipole Magnet **ON**

> Standard Operating

> The dump dipole deflects the electron beam down to the dump

Scenario 2:

> Dump Dipole Magnet **OFF**

> „Short Circuit“-Scenario

> The permanent clearing magnet deflects the electron beam 1.7° laterally

Where have all the electrons gone?

> Surface dose rate of the vacuum chamber measured 24h after irradiation

> Expected impinging point @1GeV: appr. 1.5 m behind permanent magnet

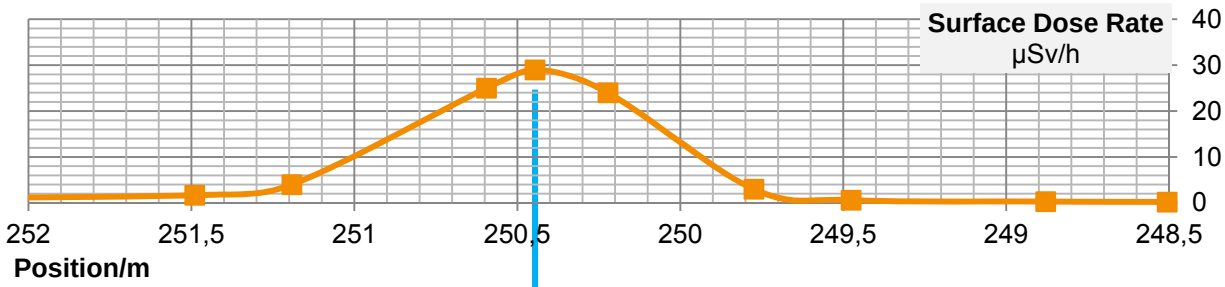

appr. 1.5 m

Dose Rate at maximum:
(µSv/h)

29
28 148
28

(View downstream)

<u>Data Permanent Magnet</u>:

Magnet Length L = 0.5 m
Magnetic flux density B = 0.2 T

Conclusion 1

Failure Dump Dipole:

> The permanent clearing magnet works properly

> No increase of dose rate „on-axis“ within beam distribution area

> Consequently no increase of dose rate in neighbouring supervised areas

Outline

- DESY-Overview
- Free Electron Laser FLASH
- Dose Rate Meter LB 6419
- Measurement 1: Dump Dipole OFF
- Conclusion 1
- **Measurement 2: Closed Valve**
- Conclusion 2

Measurement Setup: Closed Valve

> A vacuum valve in front of the dump dipole was closed „accidentally“ during beam operation

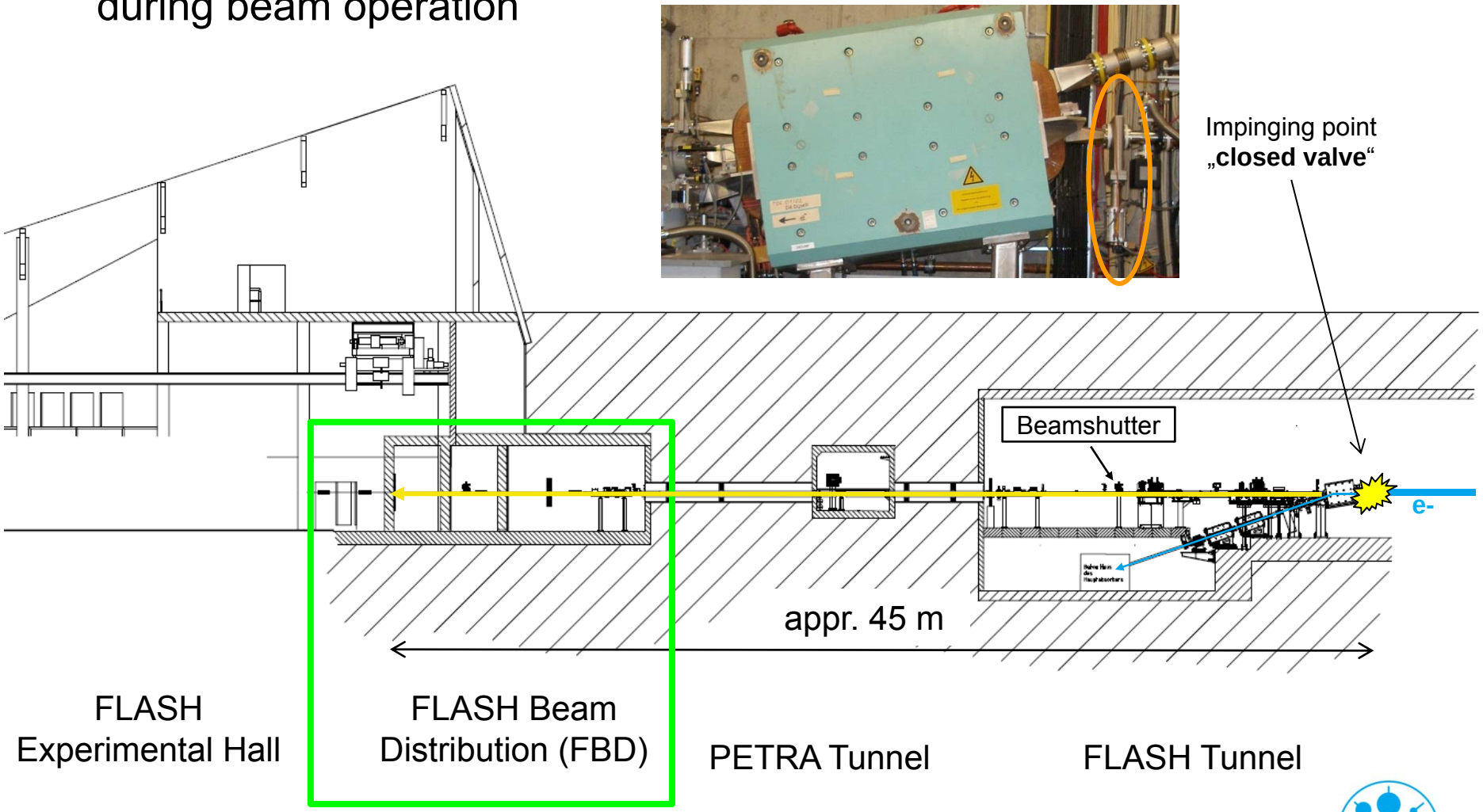

Shielding Design Beam Distribution Area

- Target (Valve):
  - Material: steel, Fe
  - Density: 8.0 g/cm³
  - Thickness: 0.2 cm
- Residual gas:
  - Material: 80% H_2 + 20% CO
  - Pressure: 4 µPa

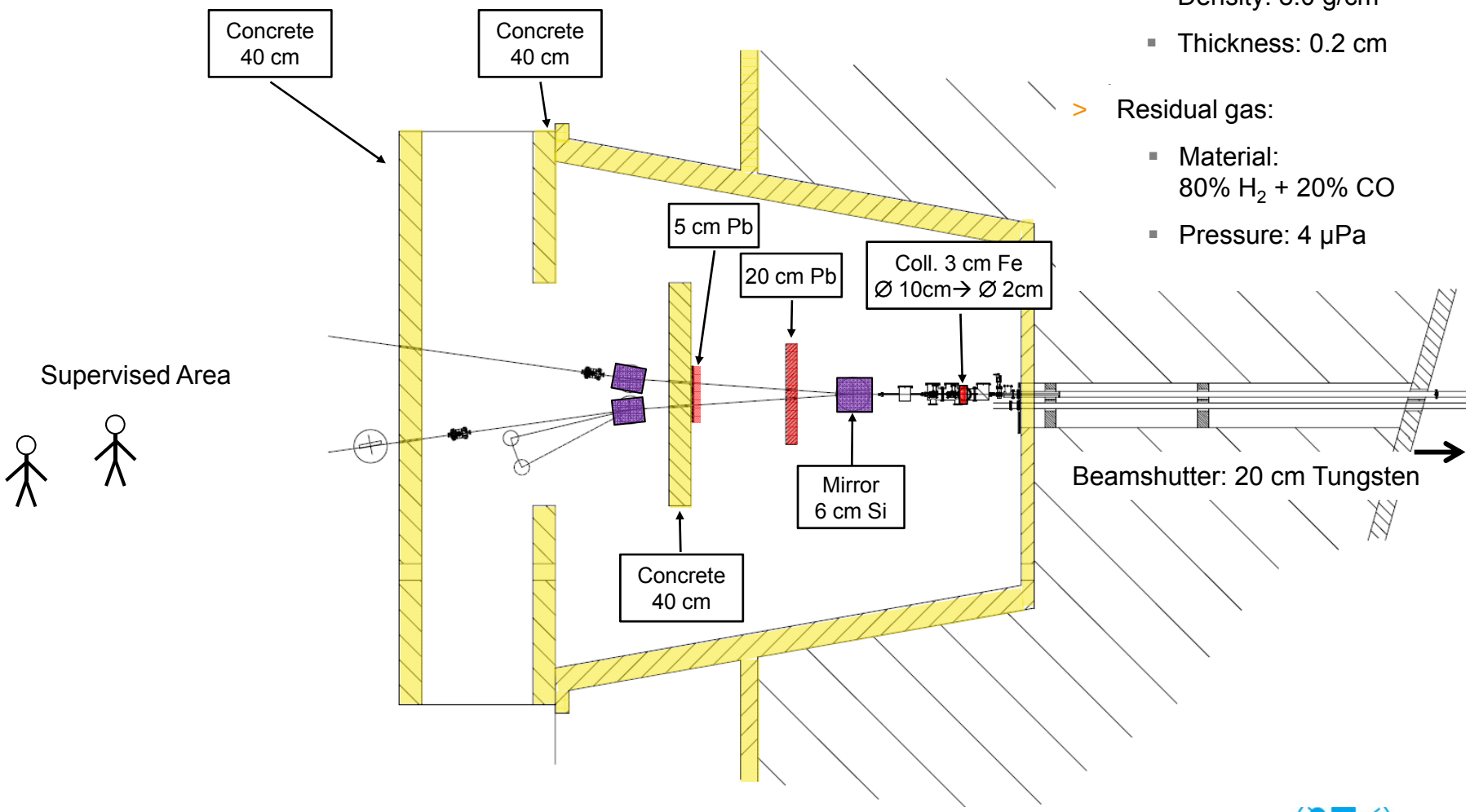

FLASH Experimental Hall

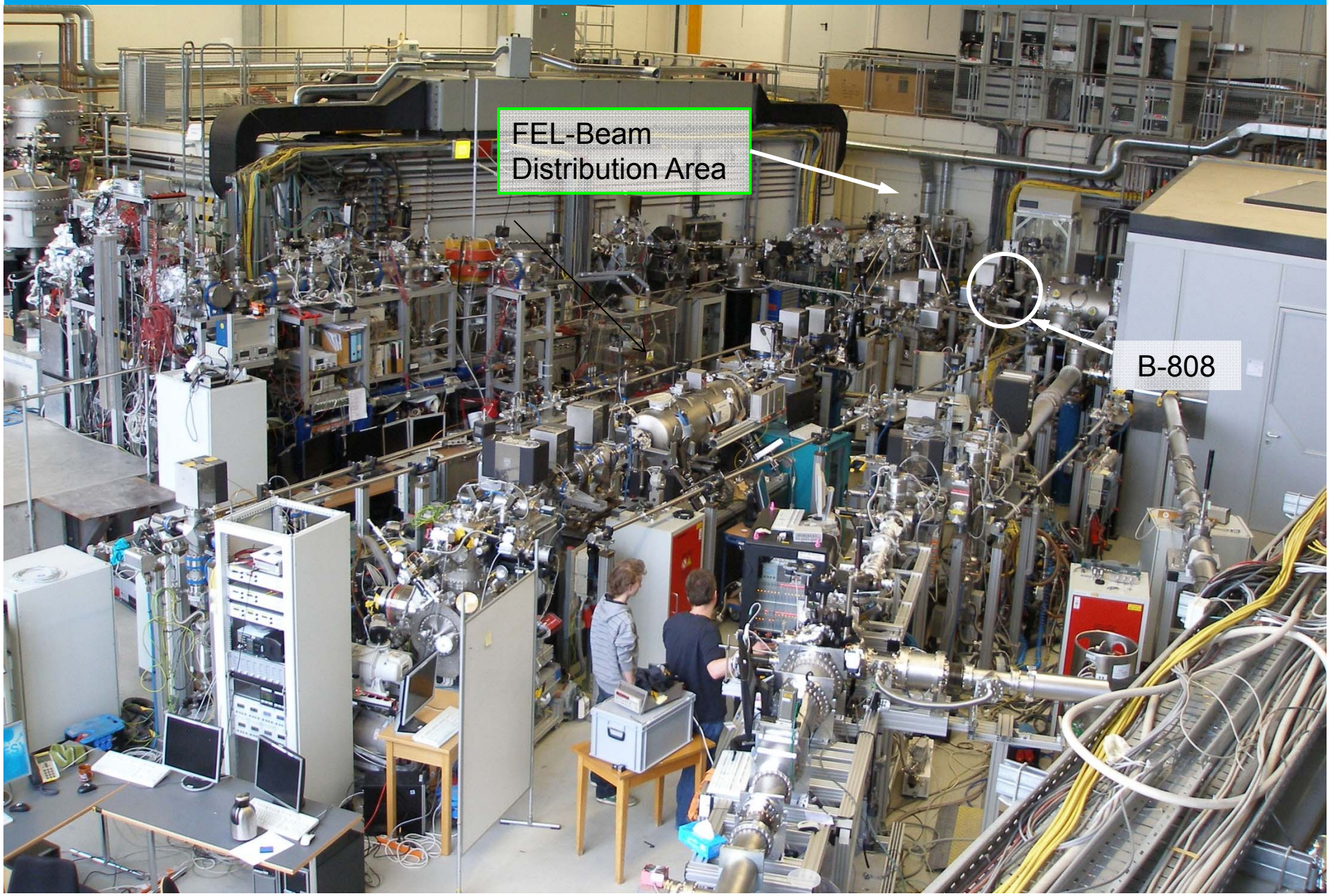

Results Closed Valve: Beamshutter open

> Dose Rate scaled from 0.01 kW to 100 kW

> Gamma Neutron

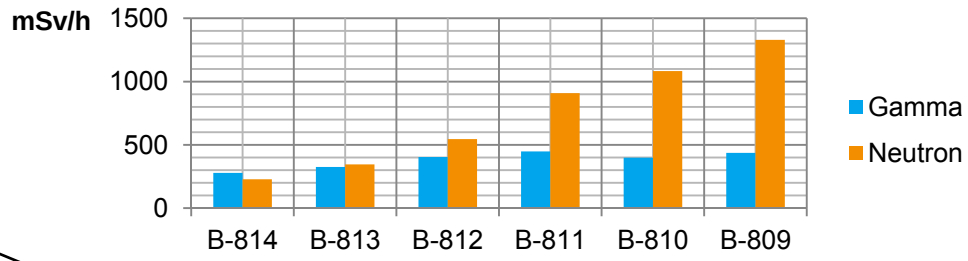

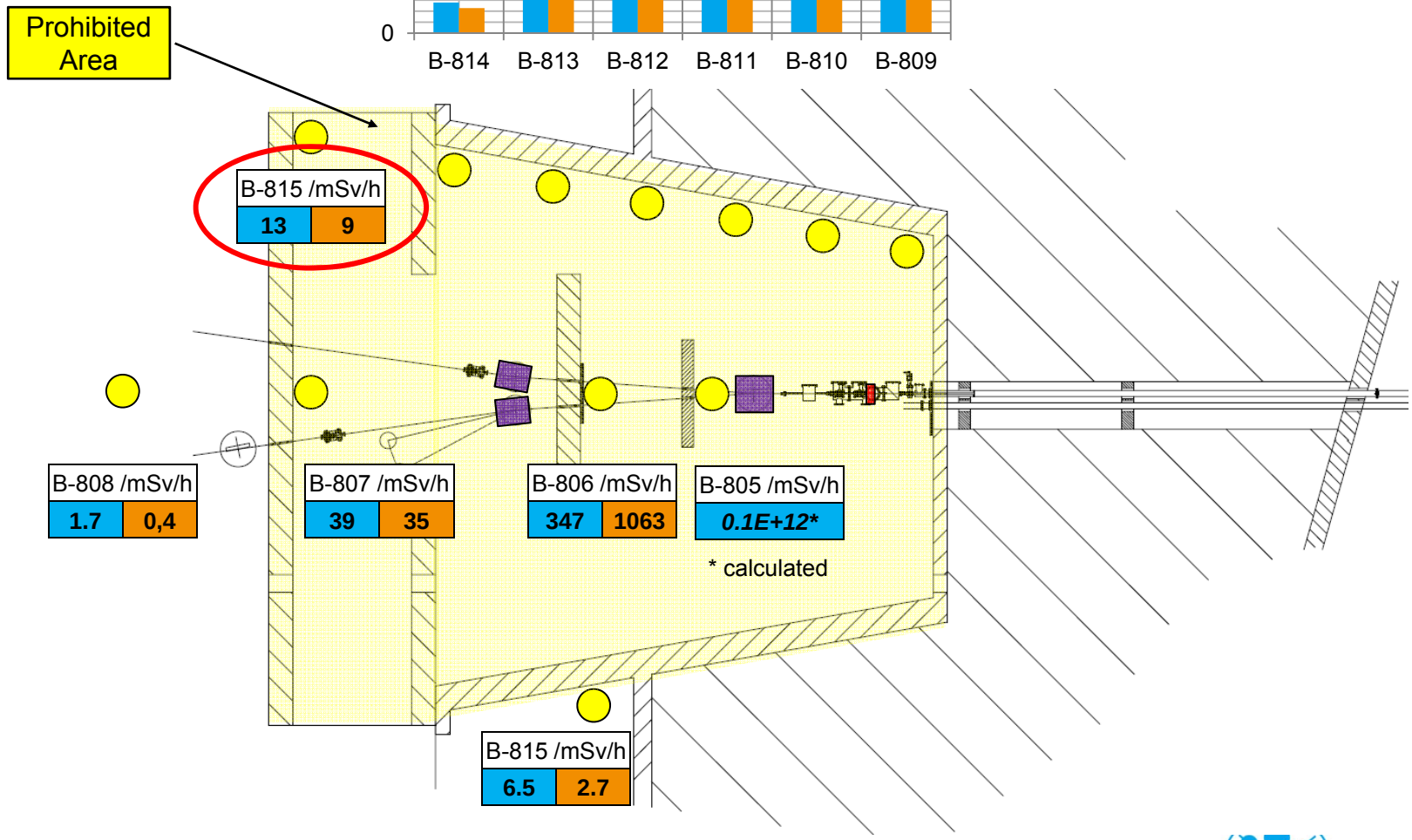

Results Closed Valve: Beamshutter closed

> Dose Rate scaled from 0.01 kW to 100 kW

> ■ Gamma ■ Neutron

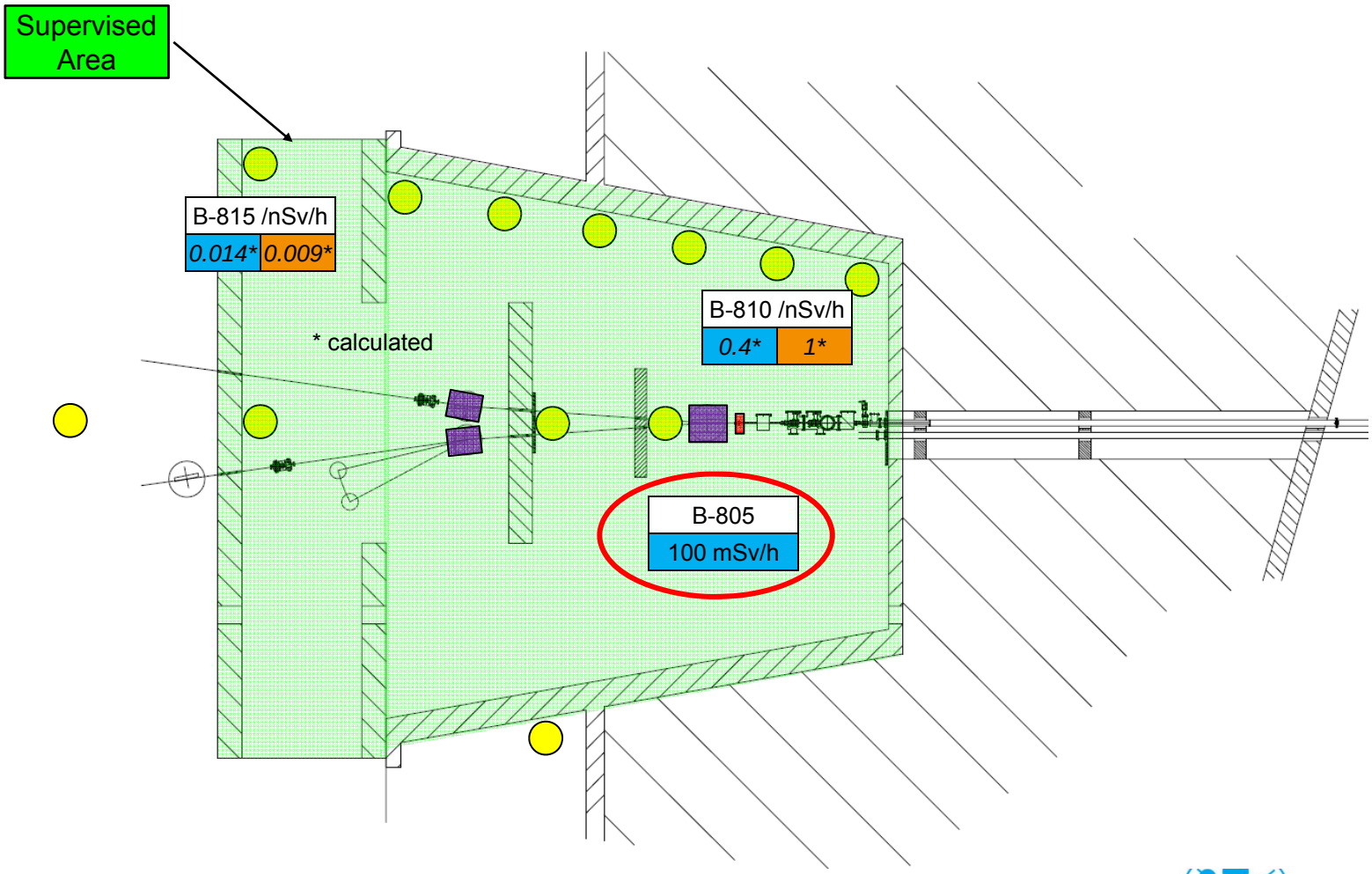

Results Closed Valve: Beamshutter open vs. BS closed

Position		Dose Rate @ 100kW mSv/h			
		Beamshutter **OPEN**		Beamshutter **CLOSED**	
		Gamma	Neutron	Gamma	Neutron
B-805	On-axis FBD 4.0m (Gamma only)	saturated *0.1 GSv/h*	-	100	-
B-806	Axis FBD-area 5.8m	347	1062	<DL	<DL
B-807	Axis FBD-area 10.7m	39	35	<DL	<DL
B-808	Axis Exp.-area 13.3m	1.7	0.4	<DL	<DL
B-809	Sidewall FBD area 0.8m	437	1330	<DL	<DL
B-810	Sidewall FBD area 2.0m	399	1083	<DL *0.4 nSv/h*	<DL *1.1 nSv/h*
B-811	Sidewall FBD area 3.5m	447	908	<DL	<DL
B-812	Sidewall FBD area 5.1m	403	545	<DL	<DL
B-813	Sidewall FBD area 6.6m	325	346	<DL	<DL
B-814	Sidewall FBD area 8.0m	279	228	<DL	<DL
B-815	Interlock Door FBD 10.9m	13	9.1	<DL *0.013 nSv/h*	<DL *0.009 nSv/h*
B-816	Engineering room 5.5m	6.5	2.7	<DL	<DL

- The FBD-Area is a prohibited area when beamshutter open
- Machine operation at 1 GeV,
- Dose Rate scaled from 0.01 kW to 100 kW
- <DL = below detection limit
- **Green values** calculated:
  - → Beamshutter of 20 cm Tungsten
  - → Attenuation closed beamshutter = **1E-09** (Leuschner, Sicherheitsbericht TTF2, Oct. 2002)

Conclusion 2

Closed valve - Open beamshutter:

> Continued operation with closed valve prevented by:
  - Machine protection system
  - Vacuum interlock /valve damage (hole)
  - **Interlocked Radiation Monitors**

> Definition: Maximum duration of this **single event = 1/10 h**

(Leuschner, Sicherheitsbericht TTF2, Oct. 2002)

> Maximum **event dose** in supervised area **< 2.2 mSv**

Closed valve - Closed beamshutter:

> Maximum **event dose** in beam cone **10 mSv**

> **Prevent vacuum work** in FBD area during machine operation

> This restriction will be mandatory for FLASH once the beam power of currently max. 2 kW will be significantly increased

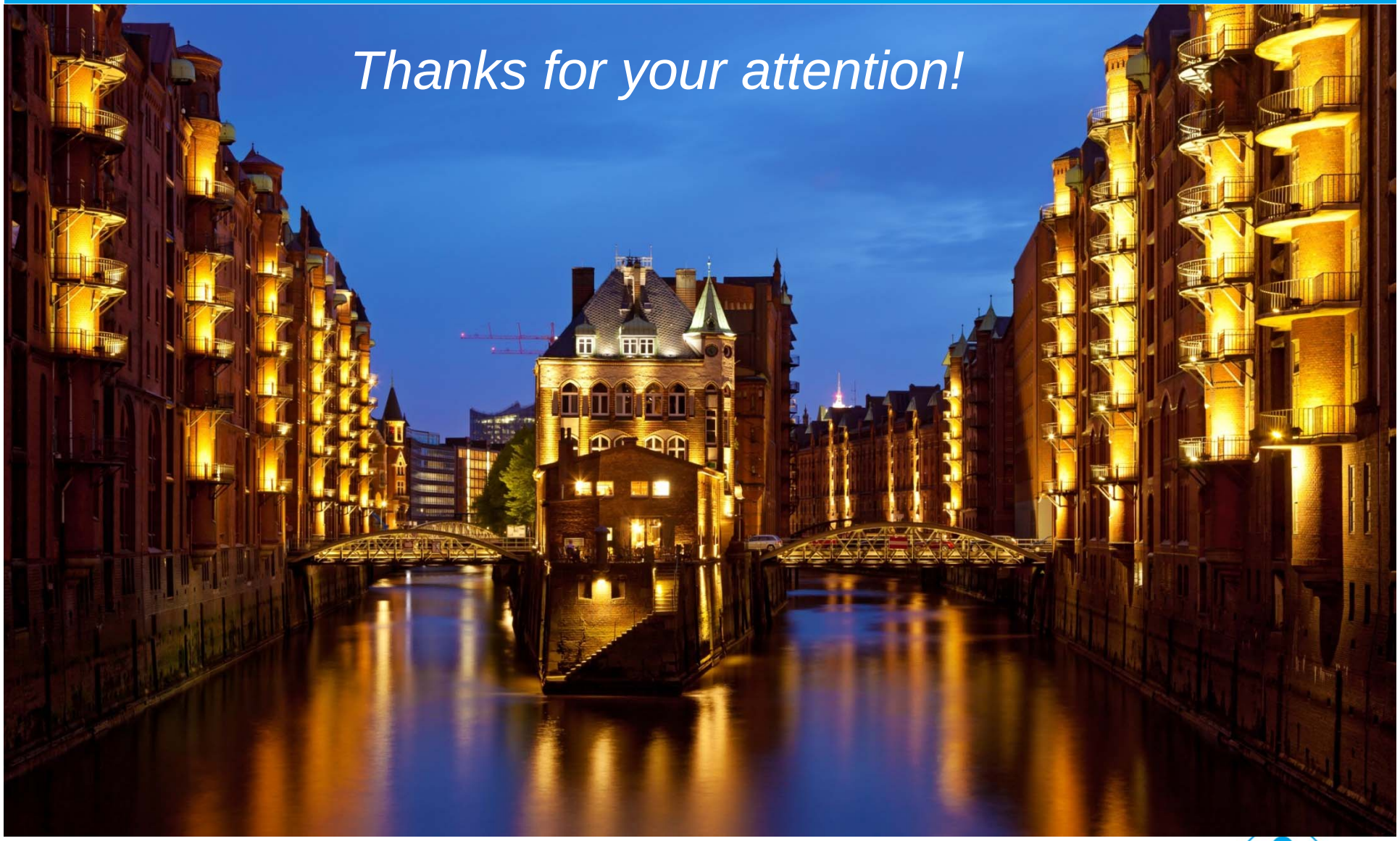
Thanks for your attention!