Polarized protons acceleration in HERA

Vladimir A. Anferov
Physics Department, University of Michigan,
Ann Arbor, Michigan 48109-1120

1 Introduction

The interest in spin phenomena has significantly increased in recent years. It is now clear that spin effects in high energy interactions provide essential information about properties of the elementary particles and their fundamental interactions. The polarized proton beam capability at HERA would provide a powerful tool for high energy physics; it would allow unique spin studies in a polarized $e-p$ collider.

While high energy electron and positron beams have selfpolarization mechanism due to the synchrotron radiation, an intense high energy polarized proton beam could only be obtained by acceleration from the source to the ring's maximum energy. Wide range of spin instabilities that become stronger at higher energies make the polarized protons acceleration a challenging problem. However, recently developed methods and techniques of overcoming the spin depolarizing resonances allow one to consider polarized proton beam acceleration in the high energy proton machines such as RHIC (250 GeV), HERA (820 GeV) and Tevatron (900 GeV).

The SPIN Collaboration and DESY Polarization Team have been studying the possible acceleration of a polarized proton beam to 820 GeV/c in the HERA ring at DESY [1]. While most of the polarized beam problems appear to have straightforward solutions using existing techniques, two main problems will need further study:

- increasing the accumulated polarized beam intensity,
- providing adequate spin stability for polarized beam acceleration and storage in HERA.

The required changes for each stage of polarized beam acceleration are shown in Fig. 1.

2 Polarized Ion Source

A state-of-the-art polarized H^- ion source should be acquired and installed at DESY. This might be either an atomic beam source (ABS), or an optically pumped polarized ion source (OPPIS). Both types of sources have made tremendous progress in the recent years; the best ABS at INR (Moscow) has now achieved a current of 1 mA in pulsed operation [2], while the best OPPIS at TRIUMF (shown in Fig. 2) has recently obtained H^- current of 1.6 mA in DC mode with the beam emittance of 2π mm·mrad [3]. The source performance together with accumulation efficiency will be crucial issues for attaining a high intensity polarized proton beam at 820 GeV/c. Recent experimental tests at TRIUMF indicate that a 10 mA polarized H^- current could be obtained in the pulsed mode using the OPPIS technology. Such a source would bring the polarized beam intensity in HERA close to the intensity of unpolarized beam.

3 Polarized beam acceleration

Various methods would be used in HERA in order to preserve the beam polarization during the acceleration, but the biggest problems arise in the 820 GeV/c HERA ring.

Accelerating polarized protons in HERA is difficult not only because of the very strong depolarizing resonances that occur during the acceleration, but also because of the requirement

of a several hours polarization life time at the top energy in order to be useful for the experiments. Four Siberian snakes could be installed in each of the existing long straight sections. However, earlier studies by the DESY Polarization team have shown that the vertical orbit bumps around the interaction regions in HERA would interfere with any standard Siberian snake configuration. A solution to this problem was found, which would require four additional snakes to make the HERA ring "flat" for the spin motion. We called these snakes "flattening snakes" to emphasize their purpose of making the vertically bending beam lines near the interaction regions spin transparent.

Even after "flattening" the HERA lattice the spin perturbation remains very strong and four snakes in HERA would not provide adequate spin stability during the polarized beam acceleration. To reduce the strength of the spin perturbations we consider various correction techniques that could reduce the rms orbit error to perhaps 0.2 mm and the emittance of the polarized beam to perhaps 5π mm mrad. One could also consider installing additional four regular or type-3 snakes into each bending arc. Both options are now under careful analysis using various spin tracking techniques developed by the SPIN Collaboration and DESY Polarization team.

References

[1] SPIN Collaboration, "*Acceleration of Polarized Protons to 820 GeV/c at HERA*",University of Michigan Report UM-HE 96-20, November 1996.

[2] A.S. Belov *et al.*, Proc. 6th Int. Conf. on Ion Sources (Whistler); Rev. Sci. Instrum. **67**, 1293 (1996).

[3] A.N. Zelenski *et al.*, Proc. of PAC97 (Vancouver); Rev. Sci. Instrum. **67**, 1359 (1996).

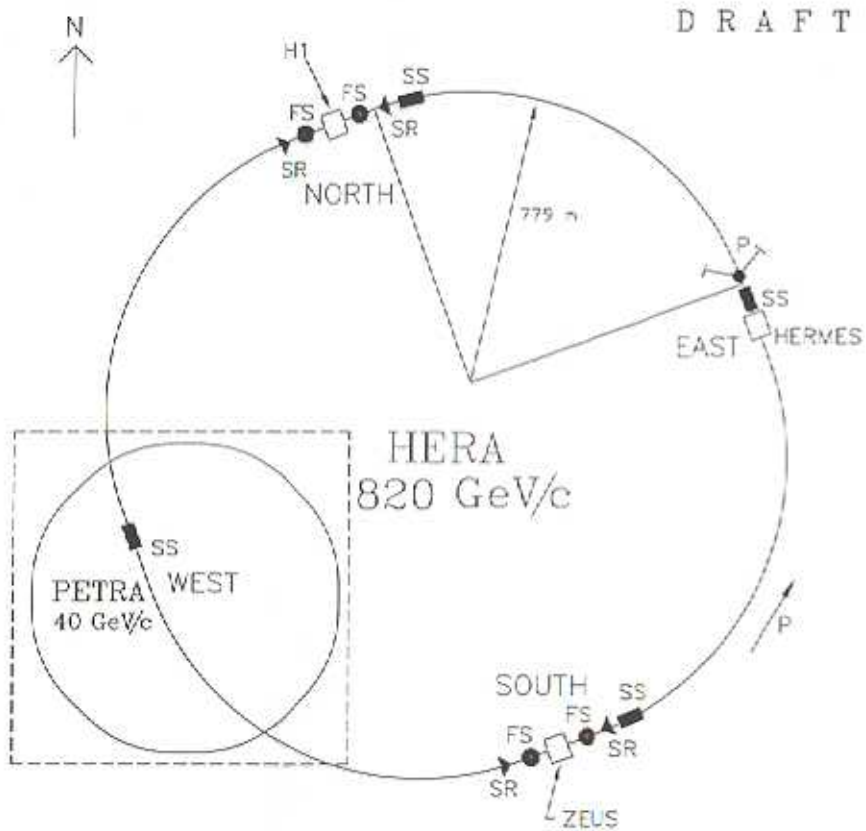
DRAFT
N
H1
FS
SS
SR
NORTH
779 m
P
EAST
HERMES
HERA
820 GeV/c
PETRA
40 GeV/c
WEST
SOUTH
ZEUS
SS–Siberian snake
SR–Spin Rotator
FS–Flattening snake
P –Polarimeters

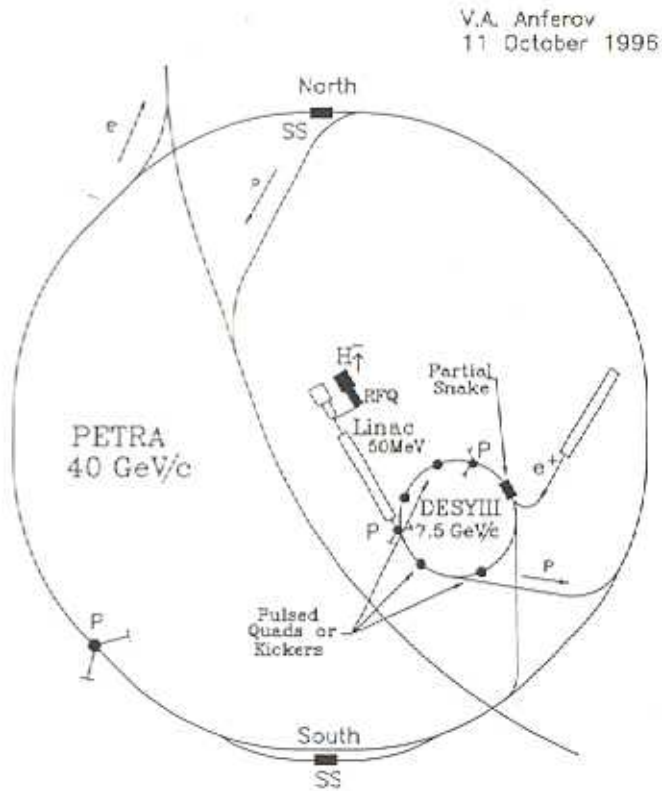
V.A. Anferov
11 October 1996
North
South
SS
PETRA
40 GeV/c
RFQ
Linac
50MeV
Partial
Snake
DESYIII
7.5 GeV/c
Pulsed
Quads or
Kickers
P

Optically-Pumped Polarized Ion Source

TRIUMF-INR-KEK

1.6 mA output DC H^- current with 2π mm·mrad emittance

20 mA in 100 μsec pulses at 0.25 Hz rate might be possible

(would equal unpolarized intensity)

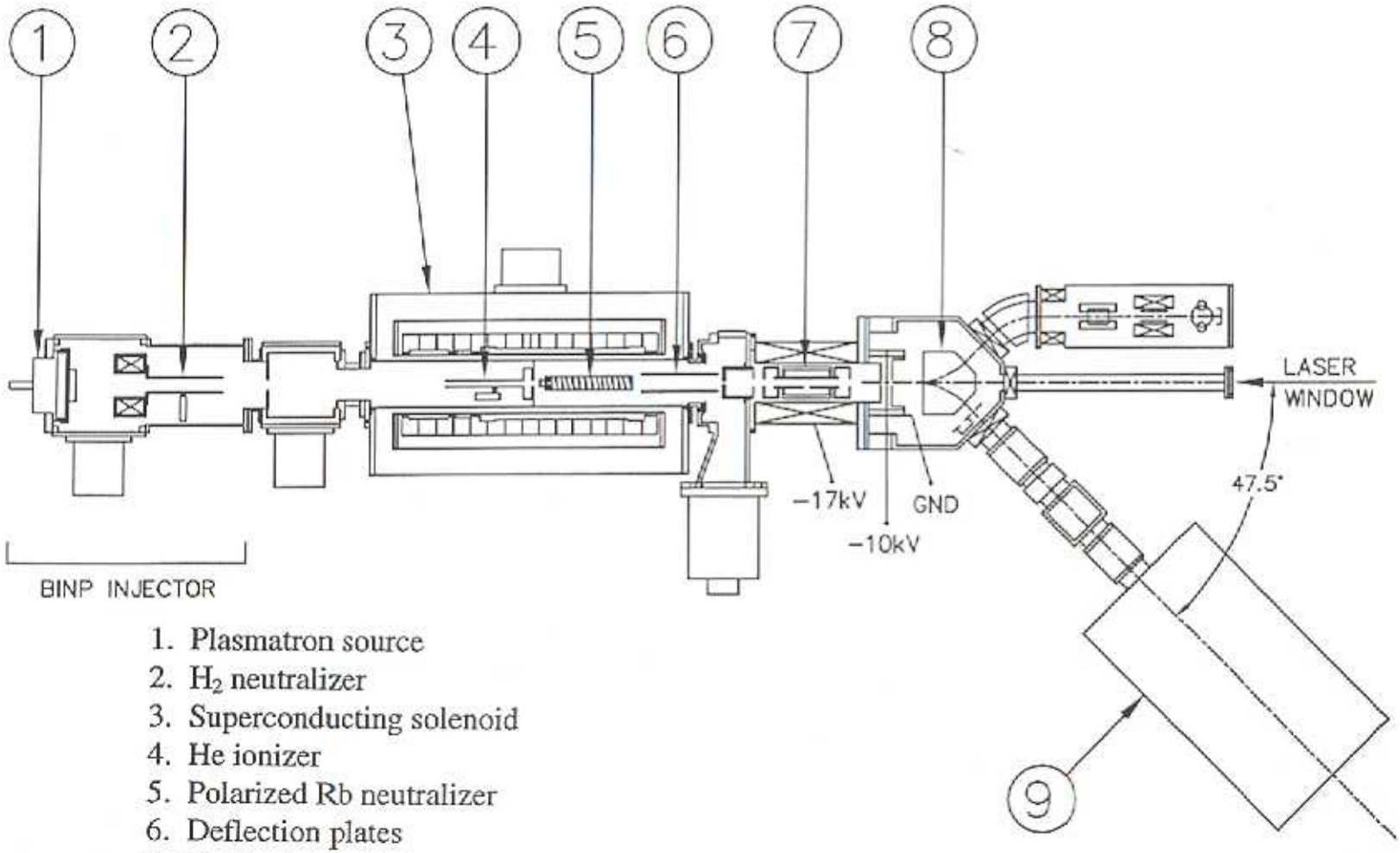

1. Plasmatron source
2. H_2 neutralizer
3. Superconducting solenoid
4. He ionizer
5. Polarized Rb neutralizer
6. Deflection plates
7. Na^- ionizer
8. Bending magnet
9. RFQ