Microgrid Business Cases in Meeting the DOE Program Targets

Scott Backhaus

Los Alamos National Laboratory

Work Performed Under the DOE/OE Microgrid Program

Collaborators—Contributors

Business Case

Steve Bukowski-SNL/NMSU

Michael Stadler-LBNL

John Eddy-SNL

Dhruv Bhatnagar-SNL

Jason Stamp-SNL

Mark Smith-SNL

- Operations and Control Use Case
- Bob Lasseter-U. of Wisconsin
- Yan Xu-ORNL
- Tom Rizy-ORNL
- Aleks Dimitrovski-ORNL
- Kevin Schneider-PNNL
- Chen-Ching Liu-Washington State U.
- Dhruv Bhatnagar-SNL
- Jim Reilly-Reilly Assoc.
- Jason Stamp-SNL
- Joe Eto-LBNL

Objective—Setting Microgrid Cost and Performance Targets

DOE 2020 Microgrid Targets……

By 2020, develop commercial scale microgrid systems (capacity <10 MW) capable of:

1. reducing outage time critical loads by >98%
2. reducing emissions by >20%, and
3. **improving system energy efficiencies by >20%

Technical Performance

Economic

4. at a cost comparable to non-integrated baseline solutions (uninterrupted power supply [UPS] plus diesel genset).

- We want to balance cost vs performance

Nature of Outage Statistics Makes the Problem Separable

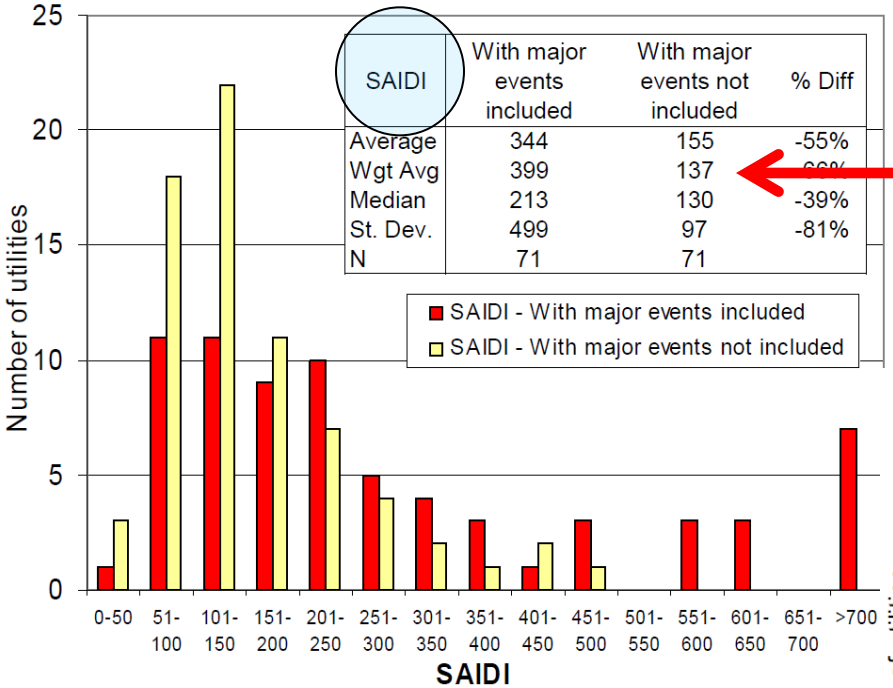

SAIDI	With major events included	With major events not included	% Diff
Average	344	155	-55%
Wgt Avg	399	137	-66%
Median	213	130	-39%
St. Dev.	499	97	-81%
N	71	71	

Most customers experience
- 1 outage/year
- about 2 hours in duration

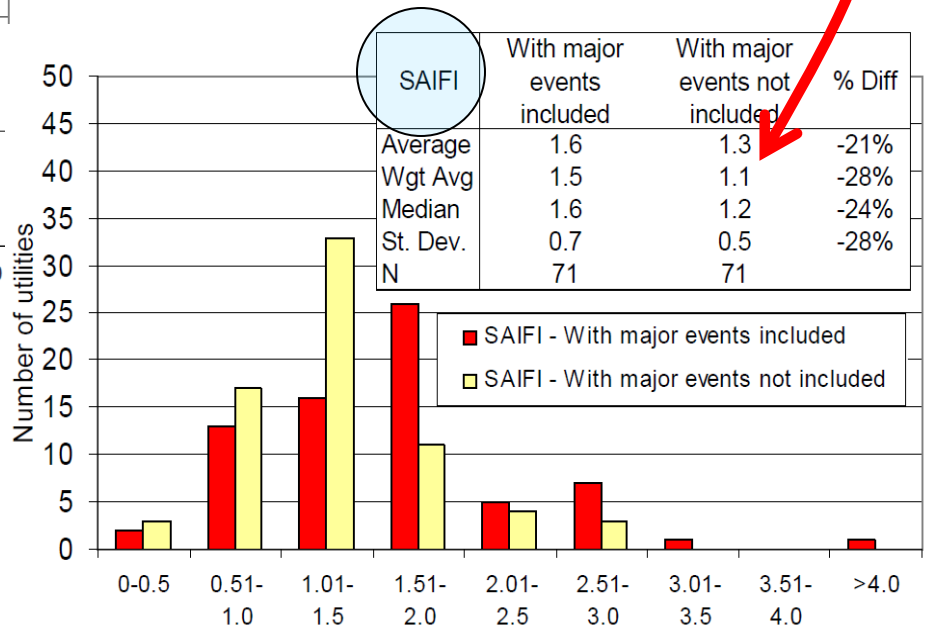

SAIFI	With major events included	With major events not included	% Diff
Average	1.6	1.3	-21%
Wgt Avg	1.5	1.1	-28%
Median	1.6	1.2	-24%
St. Dev.	0.7	0.5	-28%
N	71	71	

***http://certs.lbl.gov/pdf/lbnl1092e-puc-reliability-data.pdf**

Separable Estimation of DOE 2020 Targets

Microgrid Design

99.96% of the time

0.04% of the time

Grid-Connected Simulation

Islanded Simulation

Economic Simulation DER-CAM

reduce emissions by >20%

**improve system energy efficiencies by >20%

cost comparable to non-integrated baseline solutions = Diesel + UPS

reduce outage time critical loads by >98%

"Durability" Simulation PRM

Unified Microgrid Cost and Performance Evaluation

Cases Considered

"Clean Slate" = Utility Service

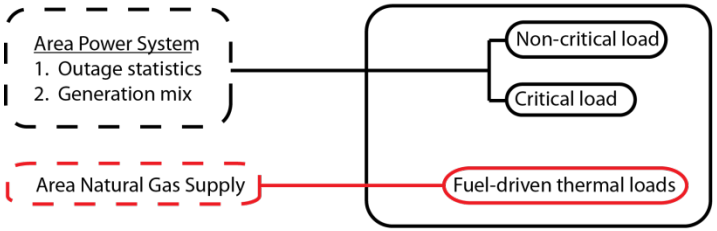

Non-Integrated Solution = Diesel + UPS

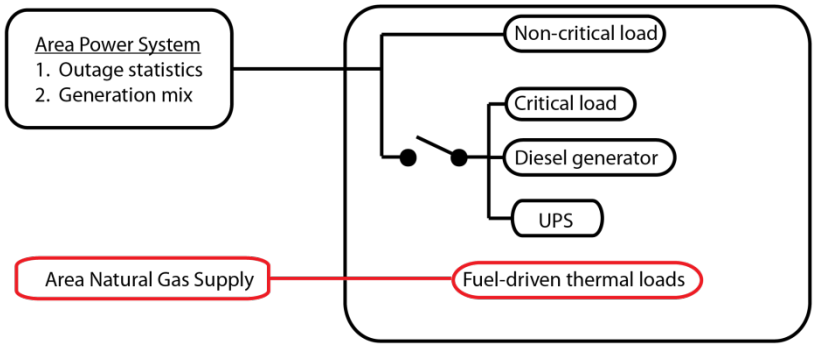

Integrated Microgrid Solution = CHP + PV + Wind + Storage

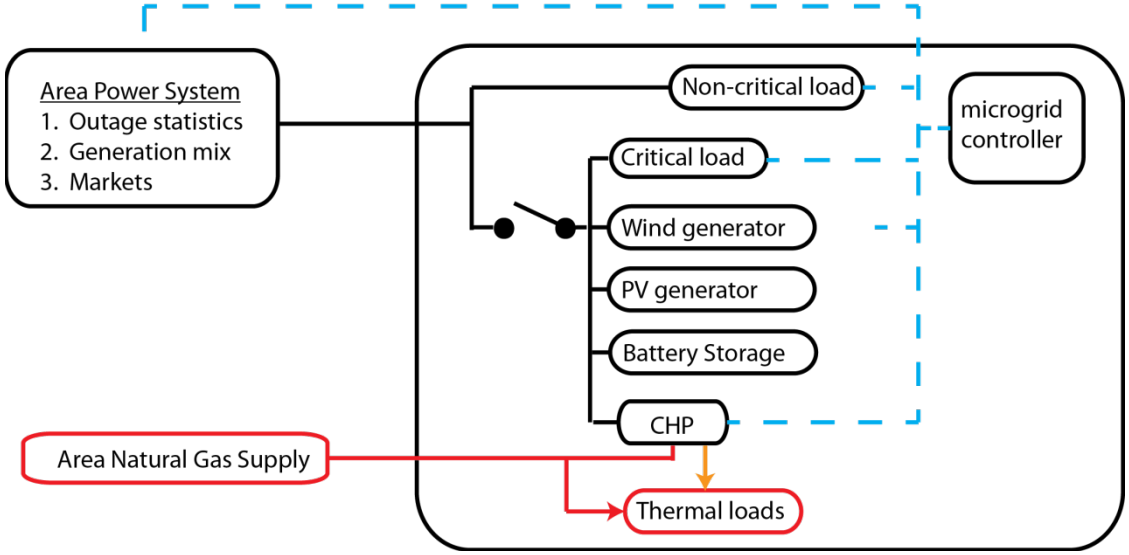

PV (kW)	Wind (kW)	CHP (kWe)
0	0	0
100	100	100
200	200	200
500	500	500
1000	1000	1000
2000	2000	2000

Battery Storage			
Power (kW)	Energy (kW-hrs)		
0			
100	70	100	400
200	140	200	800
500	340	500	2000
1000	670	1000	4000
2000	1340	2000	8000

Cases Considered

"Clean Slate" = Utility Service

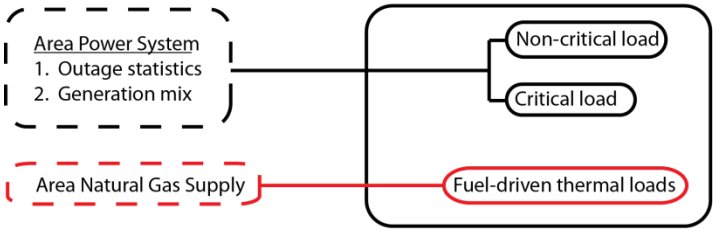

Non-Integrated Solution = Diesel + UPS

Diesel only for outages

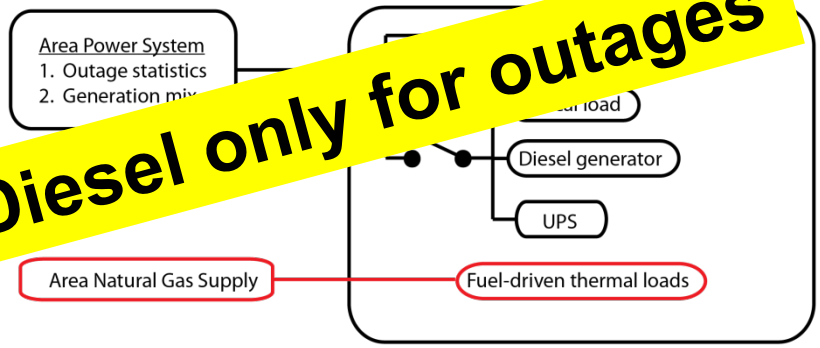

Integrated Microgrid Solution = CHP + PV + Wind + Storage

Energy assets "active" at all times

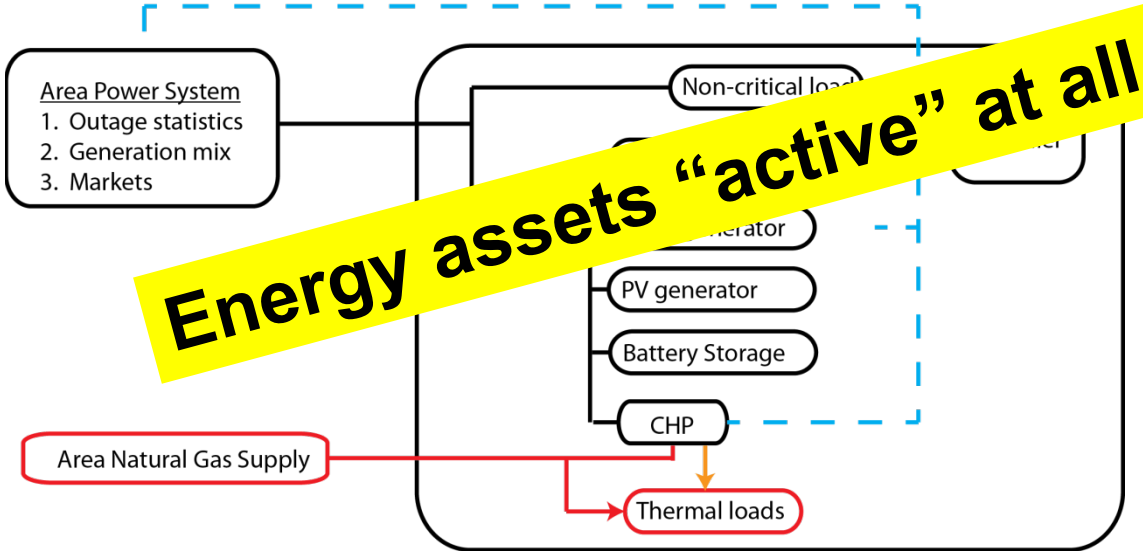

PV (kW)	Wind (kW)	CHP (kWe)
	0	0
	100	100
200	200	200
500	500	500
1000	1000	1000
2000	2000	2000

Battery Storage			
Power (kW)	Energy (kW-hrs)		
0			
100	70	100	400
200	140	200	800
500	340	500	2000
1000	670	1000	4000
2000	1340	2000	8000

Separable Estimation of DOE 2020 Targets

Microgrid Design

99.96% of the time

0.04% of the time

Grid-Connected Simulation

Islanded Simulation

Economic Simulation DER-CAM

reduce emissions by >20%

**improve system energy efficiencies by >20%

cost comparable to non-integrated baseline solutions = Diesel + UPS

reduce outage time critical loads by >98%

"Durability" Simulation PRM

Unified Microgrid Cost and Performance Evaluation

Microgrid Design Space—Performance Evaluation

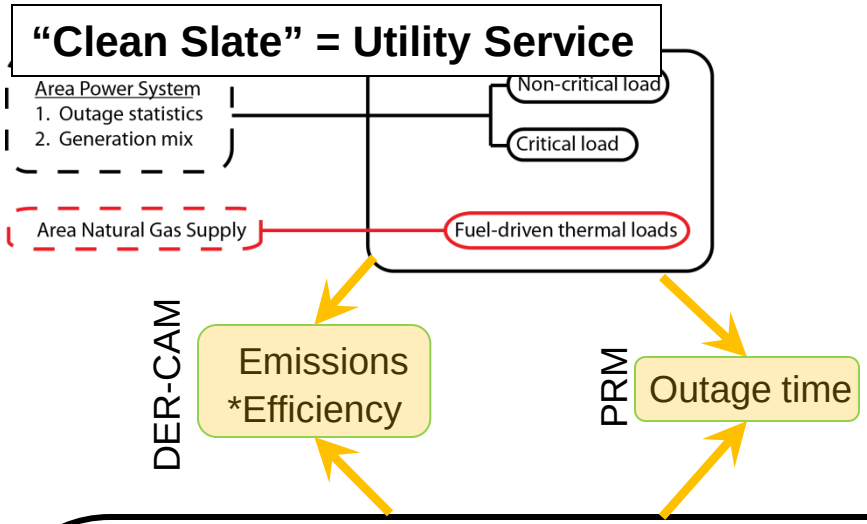

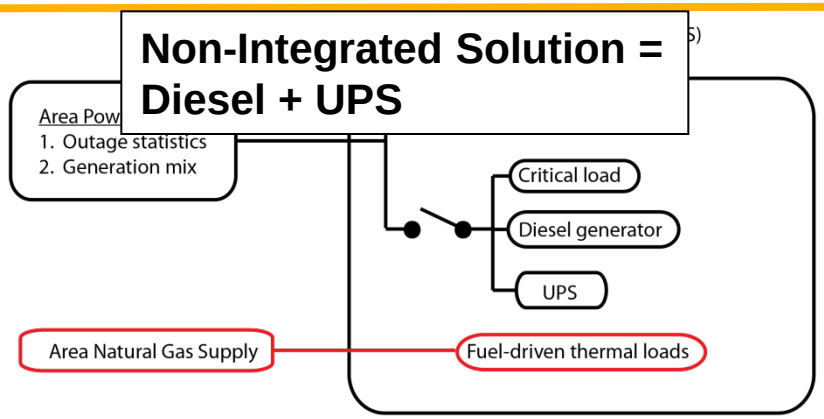

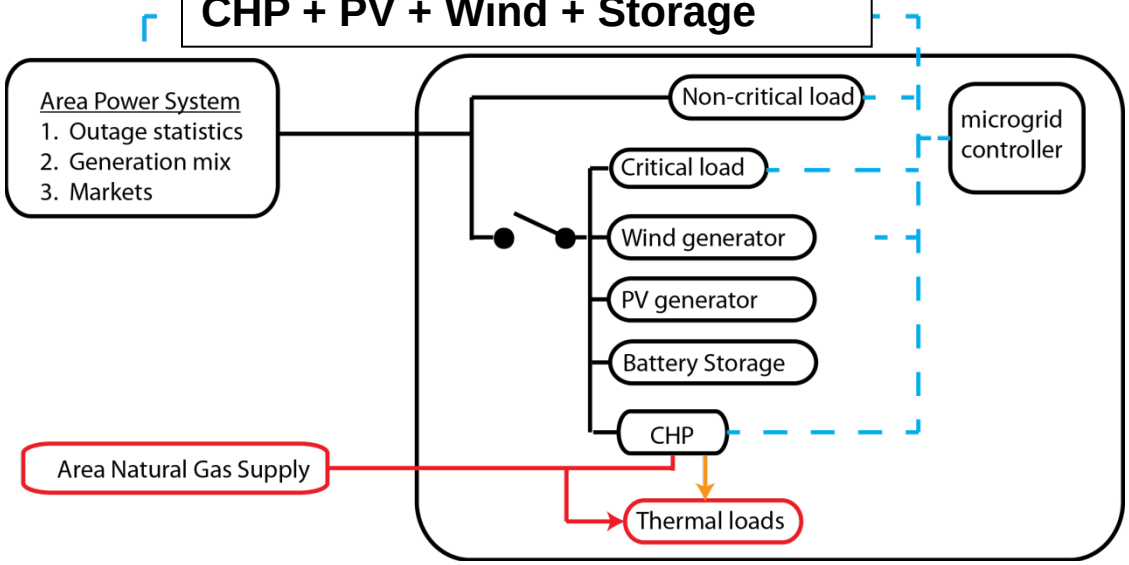

PV (kW)	Wind (kW)	CHP (kWe)
0	0	0
100	100	100
200	200	200
500	500	500
1000	1000	1000
2000	2000	2000

Battery Storage			
Power (kW)	Energy (kW-hrs)		
0			
100	70	100	400
200	140	200	800
500	340	500	2000
1000	670	1000	4000
2000	1340	2000	8000

Separable Estimation of DOE 2020 Targets

Microgrid Design

99.96% of the time

0.04% of the time

Grid-Connected Simulation

Islanded Simulation

Economic Simulation DER-CAM

reduce emissions by >20%

**improve system energy efficiencies by >20%

cost comparable to non-integrated baseline solutions = Diesel + UPS

reduce outage time critical loads by >98%

"Durability" Simulation PRM

Unified Microgrid Cost and Performance Evaluation

Microgrid Design Space—Performance Evaluation

"Clean Slate" = Utility Service

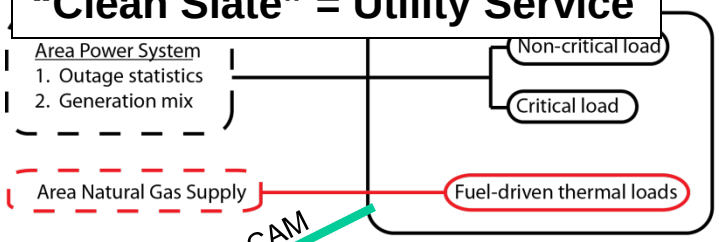

Non-Integrated Solution = Diesel + UPS

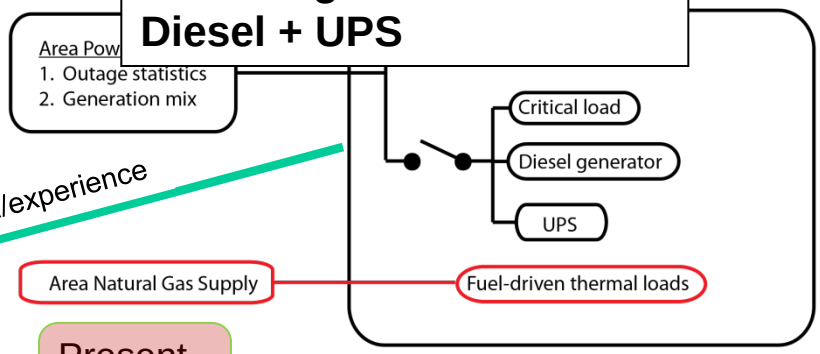

DER-CAM

Historical data/experience

Elec+Fuel cost - Elec+Fuel cost + Diesel + UPS cost - Energy asset cost = Present Value

Integrated Microgrid Solution = CHP + PV + Wind + Storage

DER-CAM

DOE Targets

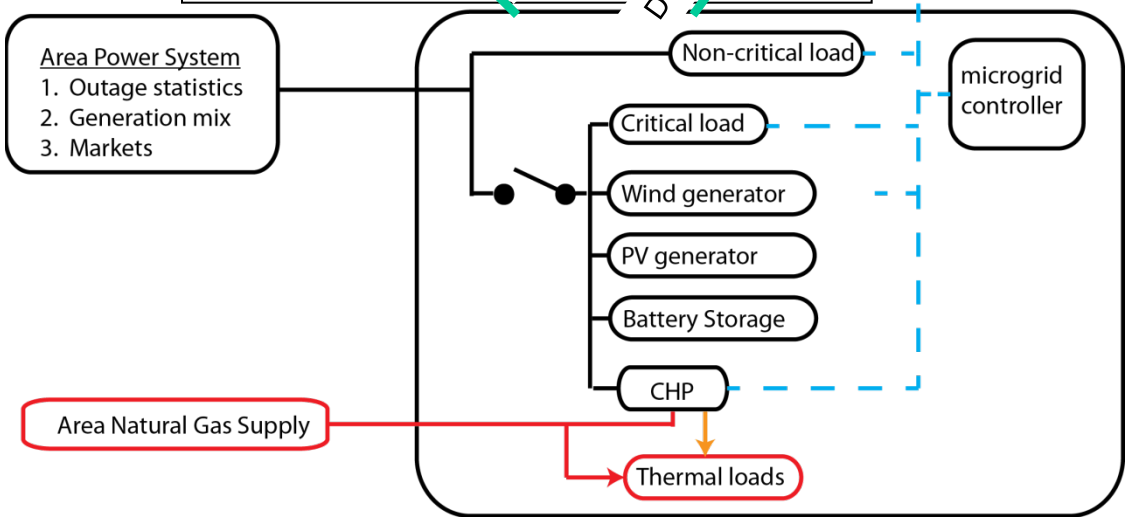

PV (kW)	Wind (kW)	CHP (kWe)
0	0	0
100	100	100
200	200	200
500	500	500
1000	1000	1000
2000	2000	2000

Battery Storage			
Power (kW)	Energy (kW-hrs)		
0			
100	70	100	400
200	140	200	800
500	340	500	2000
1000	670	1000	4000
2000	1340	2000	8000

Capital Costs

Capital Equipment	Cost	Source
Diesel	0.30 $M / MW	SPIDERS
UPS	0.50 $M / MW	SPIDERS
Transfer Switch	0.02 $M @ 1 MW	SPIDERS
PV Generation	1.50 $M / MW	DOE Sunshot (Revised)
Wind Generation	1.50 $M / MW	Wind Industry (Mature)
Battery Storage	0.13 $M / MW-hr	EERE/OE Storage Programs
Natural Gas I.C Engine	1.22 $M / MW	EIA 2025
CHP—NG I.C. Engine w/ heat exchange	1.49 $M / MWe	EIA 2025

Microgrid Design Space—Performance Evaluation

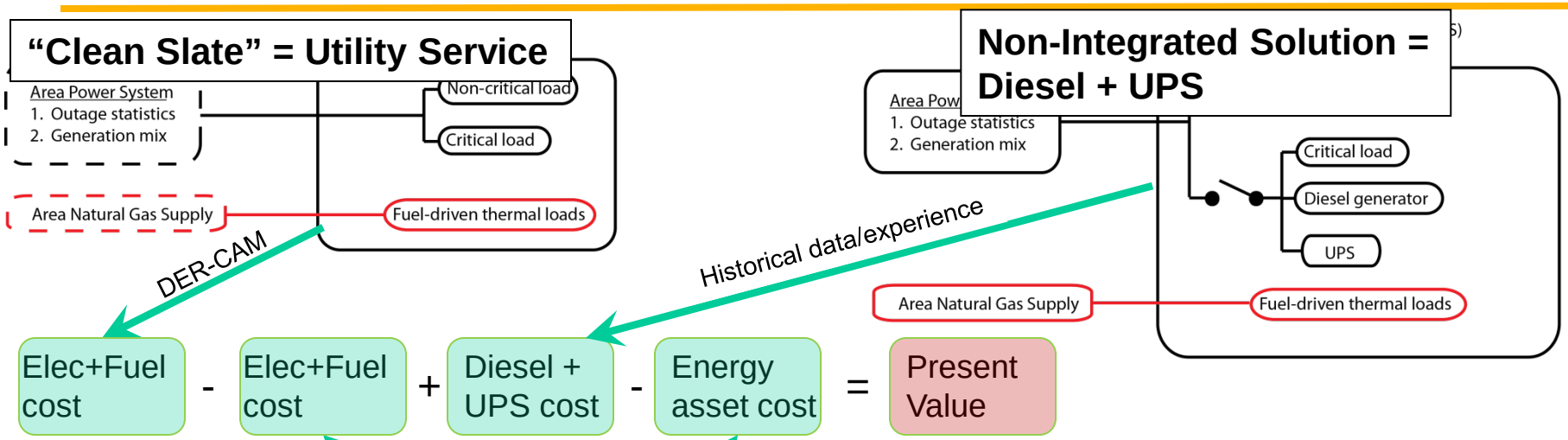

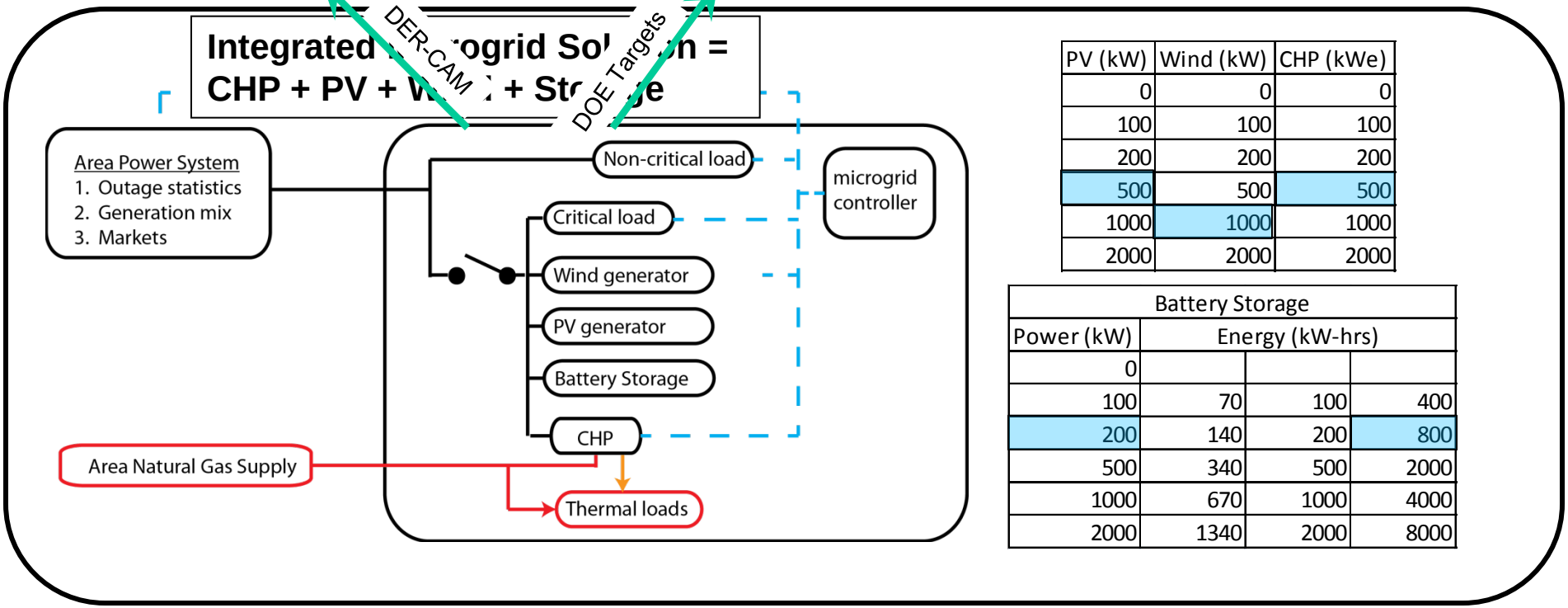

PV (kW)	Wind (kW)	CHP (kWe)
0	0	0
100	100	100
200	200	200
500	500	500
1000	1000	1000
2000	2000	2000

Battery Storage			
Power (kW)	Energy (kW-hrs)		
0			
100	70	100	400
200	140	200	800
500	340	500	2000
1000	670	1000	4000
2000	1340	2000	8000

Revenue Streams

- Meeting the DOE 2020 Targets will require a higher capital expense than the base case of a Diesel generators + UPS.

- To achieve cost parity….Microgrids need to capture value streams not available to Diesel + UPS base case

- What are the revenue streams worth capturing?

Value Stream	Annual Revenue	Cumulative Fraction of Total Revenue
On-site generation	$876,000	58.4%
Optimizing Energy TOU	$219,000	73.0%
Renewable Energy Certificates	$175,200	84.7%
CO2 Emissions Reductions	$87,600	90.5%
Spinning Reserve	$87,600	96.3%
Black Start	$30,000	98.3%
Frequency Regulation	$17,500	99.5%
Volt/VAR	$7,500	100.0%
NOx/SOx emissions reduction	$100	100.0%
Reduction in Load Not Served	$0	100.0%

Weather Data and Tariffs

Data Input	Data Source
Solar Irradiance	NREL TMY (SFO, OHR, JFK)
Wind Speed	NREL TMY (SFO, OHR, JFK)
Electrical Tariff	PG&E E-19 Tariff
Natural Gas Tariff	PG&E

<u>PG&E E-19 Tariff</u>

1. **Demand > 500 kW 3 of 12 Months**
2. **Demand charges / kW**
   - $16.13—Summer peak
   - $ 3.74—Summer partial peak
   - $12.56—Summer maximum
   - $00.21—Winter partial peak
   - $12.56—Winter maximum

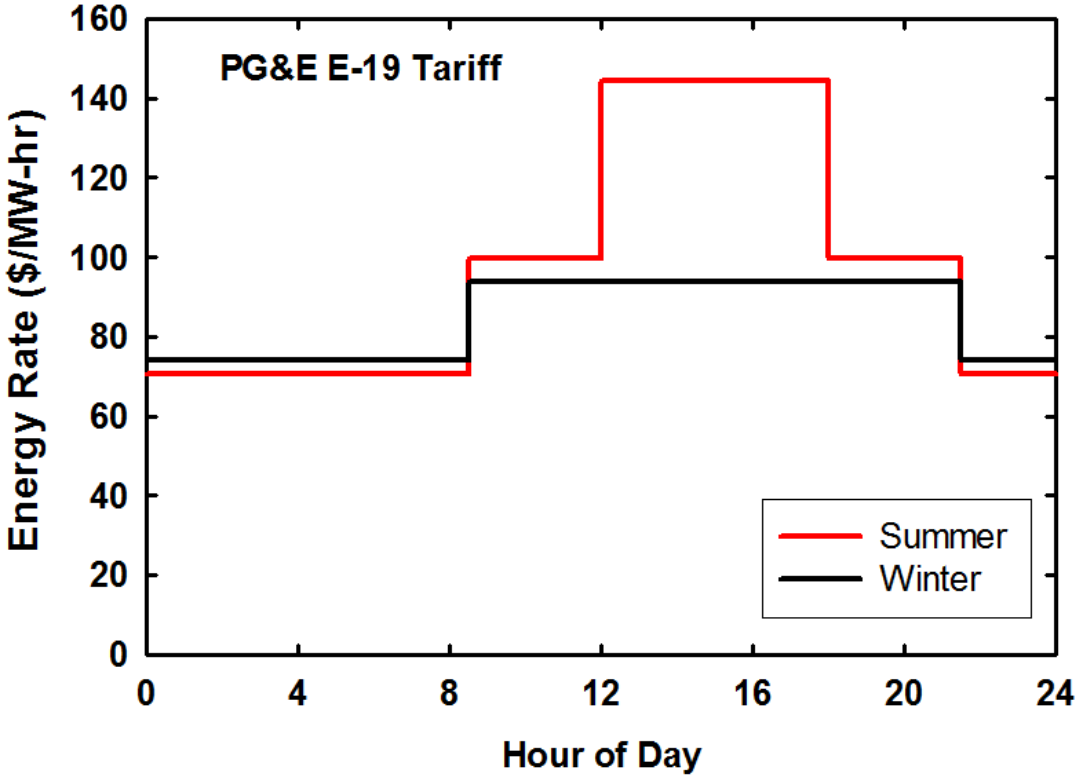

Separable Estimation of DOE 2020 Targets

Microgrid Design

99.96% of the time

0.04% of the time

Grid-Connected Simulation

Islanded Simulation

Economic Simulation DER-CAM

reduce emissions by >20%

**improve system energy efficiencies by >20%

cost comparable to non-integrated baseline solutions = Diesel + UPS

reduce outage time critical loads by >98%

"Durability" Simulation PRM

Unified Microgrid Cost and Performance Evaluation

Balancing Cost and Performance

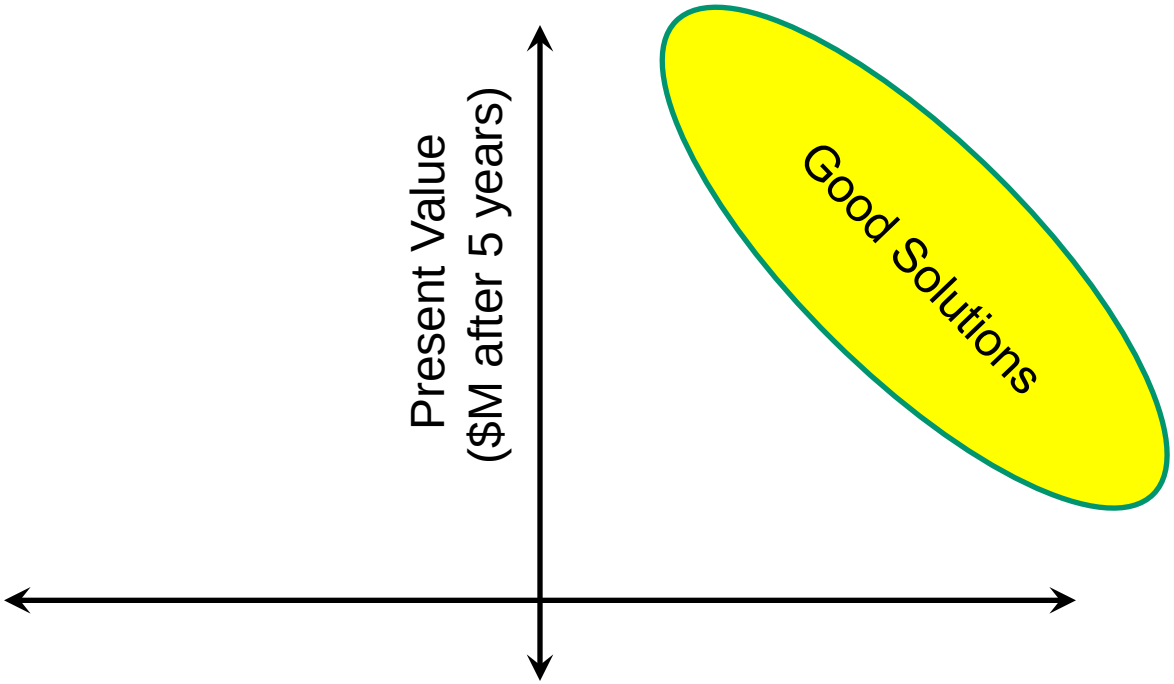

"Performance" =

Outage Reduction		CO2 Emission Reduction
97% = -1	+	10% = -1
98% = 0		20% = 0
99% = +1		30% = +1
		…..

Summary of Results—The Value of CHP

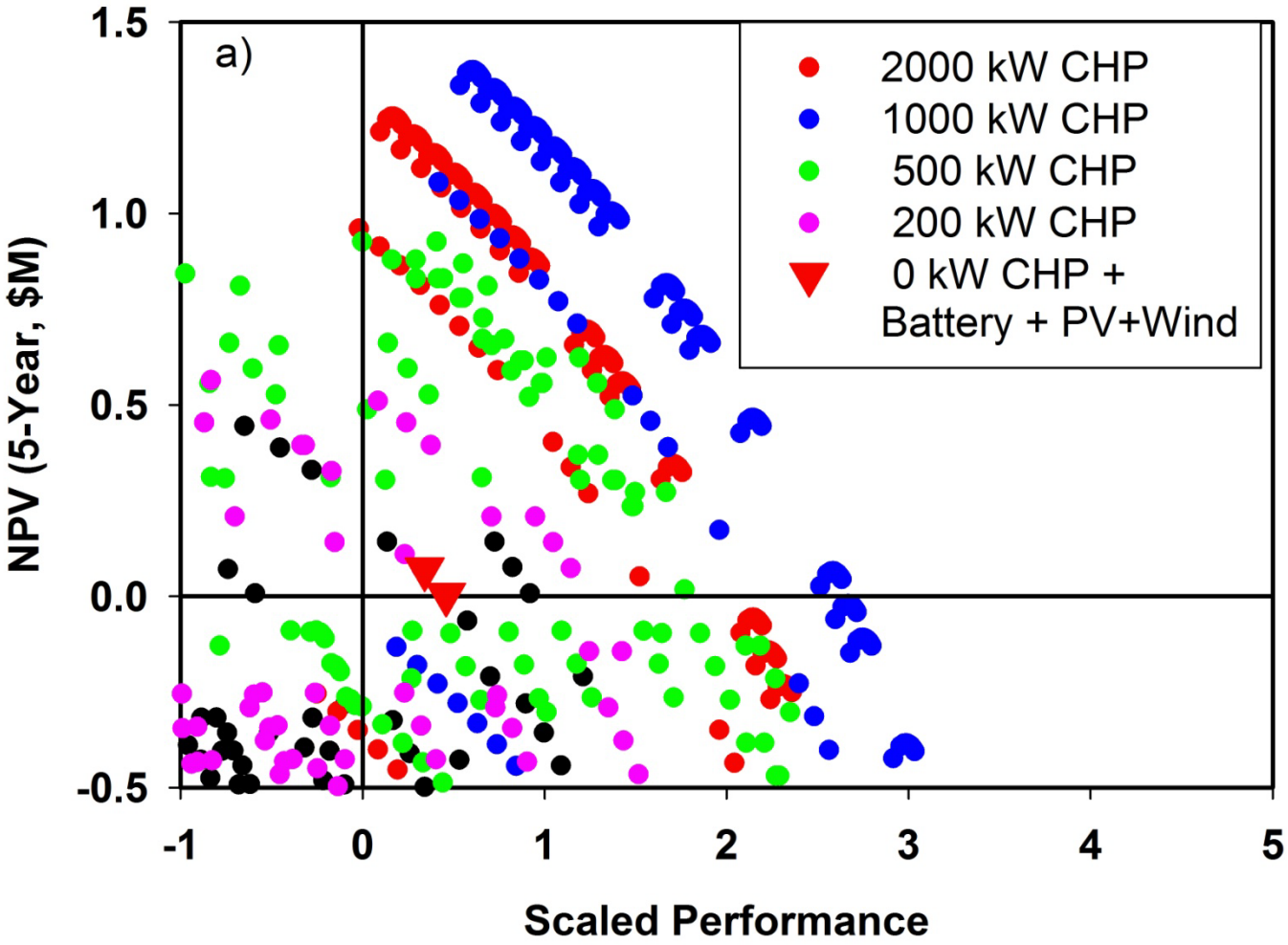

UNCLASSIFIED

Summary of Results—The Effect of PV and Wind

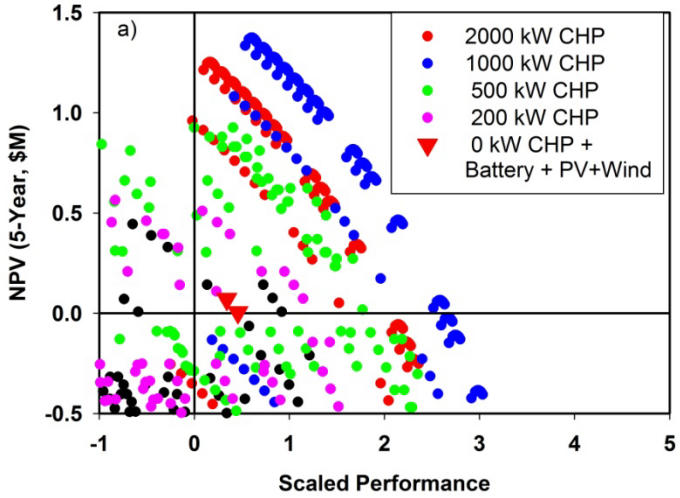

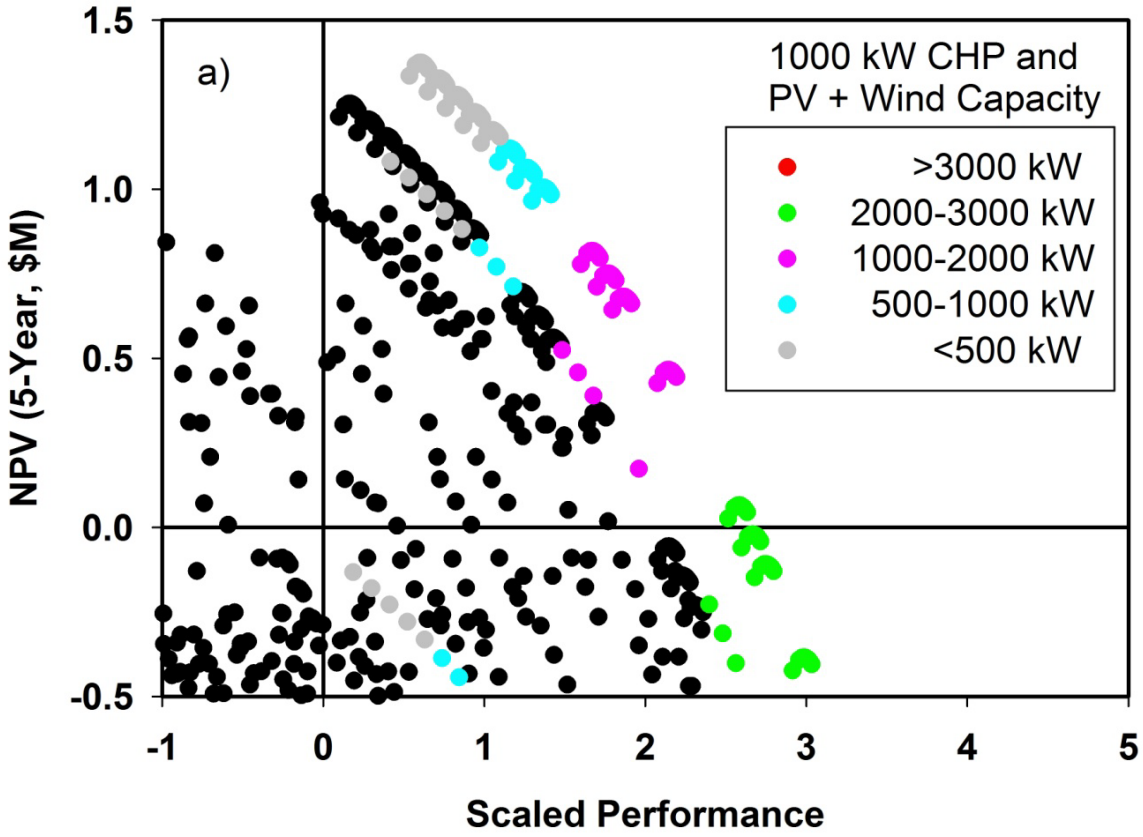

Summary of Results—The Effect of Battery Storage

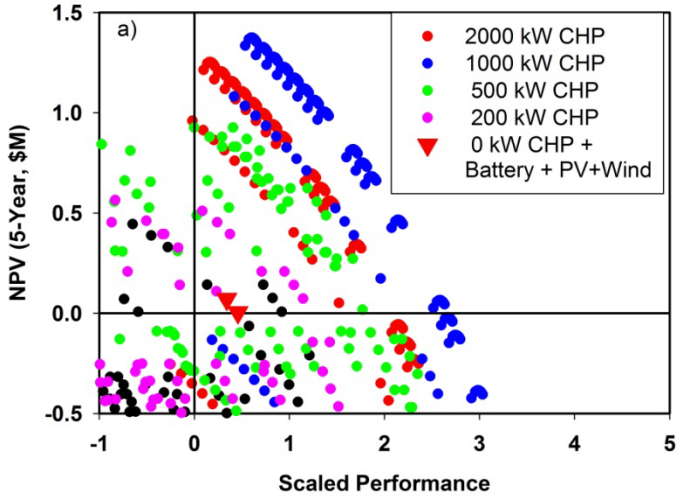

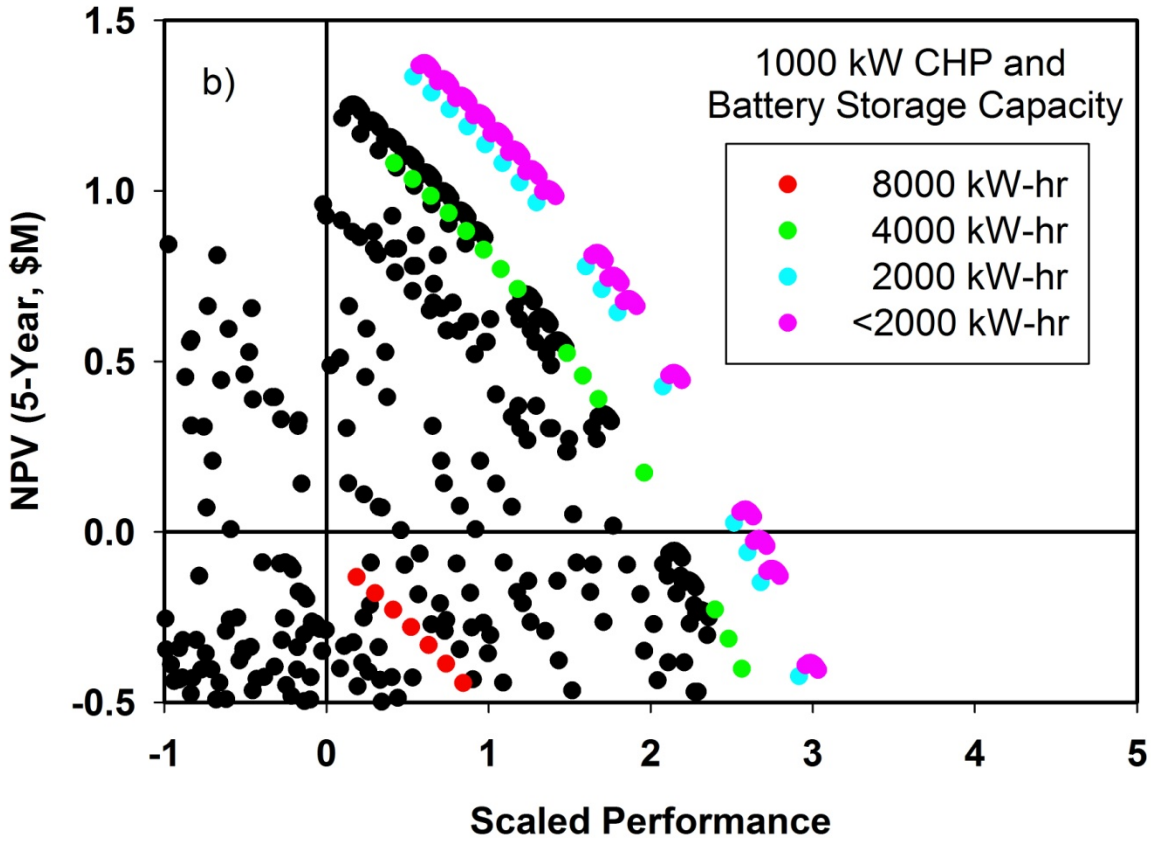

Some Conclusions

- The inclusion of firm generation in the form of CHP appears to be a crucial component in meeting the DOE 2020 Microgrid Targets
- Microgrid controllers should be able to optimize CHP operation, i.e. simultaneous electrical and thermal generation
- Battery storage detracts from economic value in CHP dominated microgrids
- The primary effect of PV and wind is to offset CO2 emissions
- A PV+Wind+Battery microgrids can meet the DOE Targets, but with significantly lower net present values.