Savannah River National Laboratory™

OPERATED BY SAVANNAH RIVER NUCLEAR SOLUTIONS

We put science to work.™

Clemson Drive Train Test Facility and Electrical Grid Laboratory applied to Improving the Resiliency of the US Electrical Grid

Joe Cordaro, Advisory Engineer

Joe.cordaro@srnl.doe.gov

SRNL Briefing at Brookhaven National Lab

October 16, 2014

Savannah River NUCLEAR SOLUTIONS℠

FLUOR • NEWPORT NEWS NUCLEAR • HONEYWELL

US Department of Energy National Laboratories

Savannah River National Laboratory

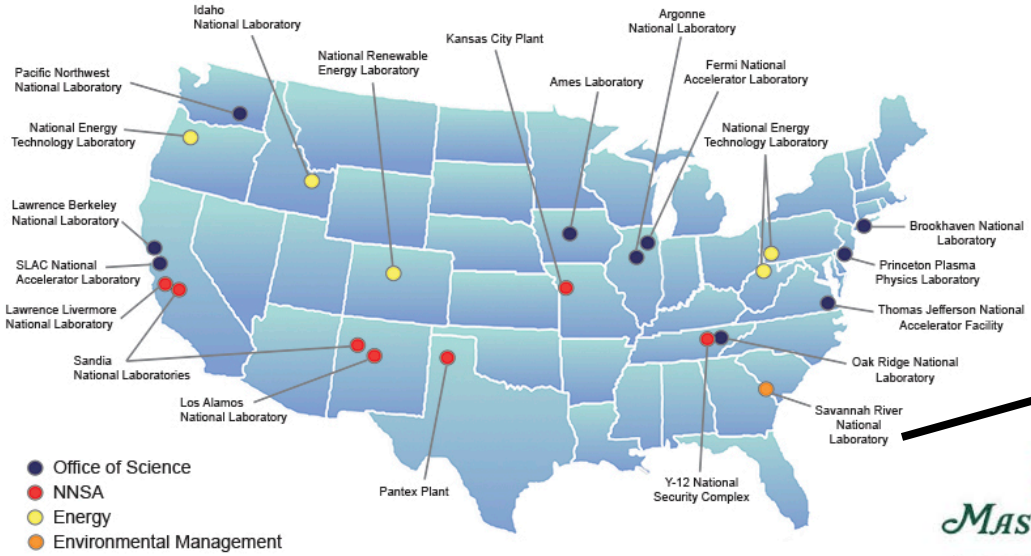

Home of the Masters Golf Tournament

- Department of Energy Owned – SRNS Operated
  - ~310 sq. miles (803 sq. km)
  - ~SRS 9000 employees (SRNL about 900)
- SRNL Research Areas
  - Clean Energy
  - Environmental Science & Engineering
  - National Security
- SRNL Research Funding – 40% Site, 60 % Work for Others

The DOE Award

On Nov. 23, 2009 the U.S. Department of Energy's Office of Energy Efficiency & Renewable Energy awarded ***a $45 million grant by the US DOE for wind power*** – to Clemson University. The purpose of the grant was to design, build and operate a facility capable of full-scale, highly accelerated testing of next-generation wind turbine drive-train technology.

The US Department of Energy's Office of Energy Efficiency & Renewable Energy objectives for the project are to:

- Accelerate the development and deployment of new wind turbine technology.
- Reduce the cost of energy delivered that will result in further growth in the market leading to economic development.
- Support the country's push towards energy independence.

The ***$98M facility which includes $53M of private and state contributions*** is strategically located at the Clemson University Restoration Institute's (CURI) campus at the former US Naval Base in North Charleston, South Carolina. The location offers a working port facility on the East Coast and worldwide access to wind turbine innovators through road, rail or ship.

Text from http://clemsonenergy.com/about/background/

Location

Image from https://www.google.com/maps

Small Dynamometer

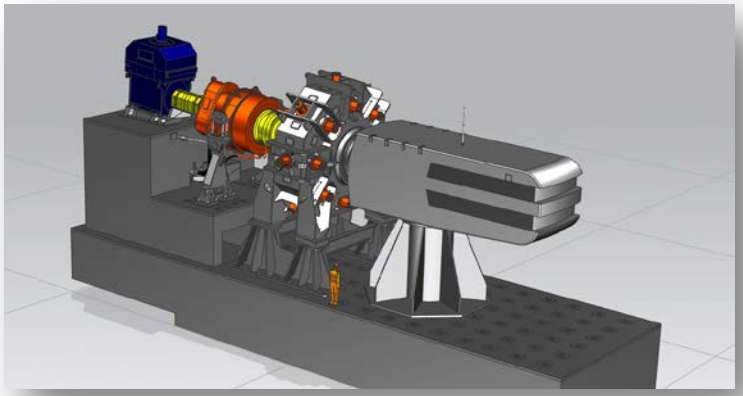

7.5 MW Test Bench Performance Specifications	
Test Power	7,500 kW
Maximum Torque	6,500 kNm
Maximum Speed	20 rpm
Inclination	4 ° to 6 °
Static Axial Force	± 2,000 kN
Static Radial Force	± 2,000 kN
Static Bending Moment	± 10,000 kNm

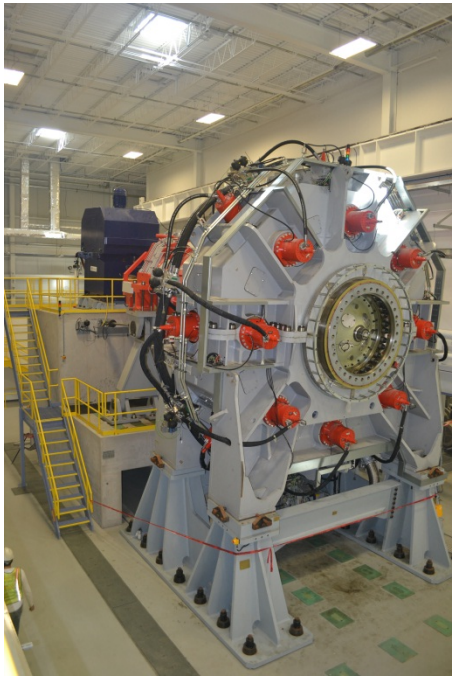

Assembling the Test Stand

Assembling the Test Stand

Assembling the Test Stand

Small Dynamometer

Small Dynamometer

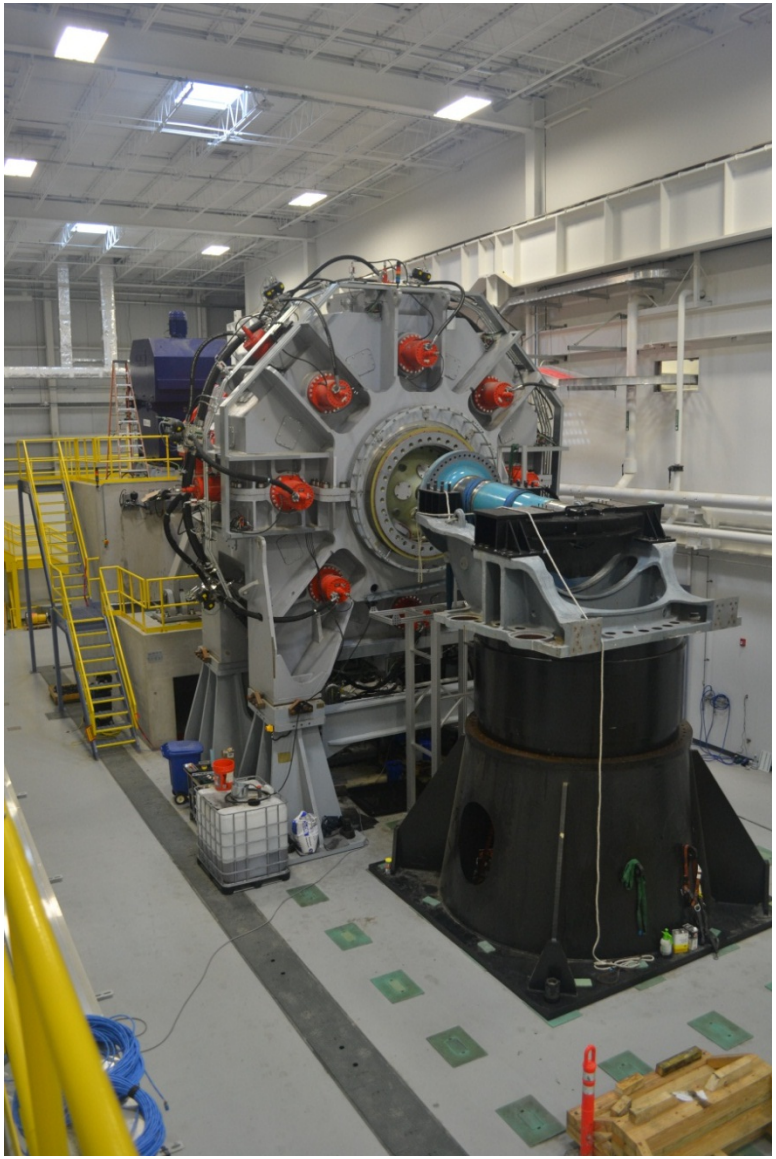

Large Dynamometer

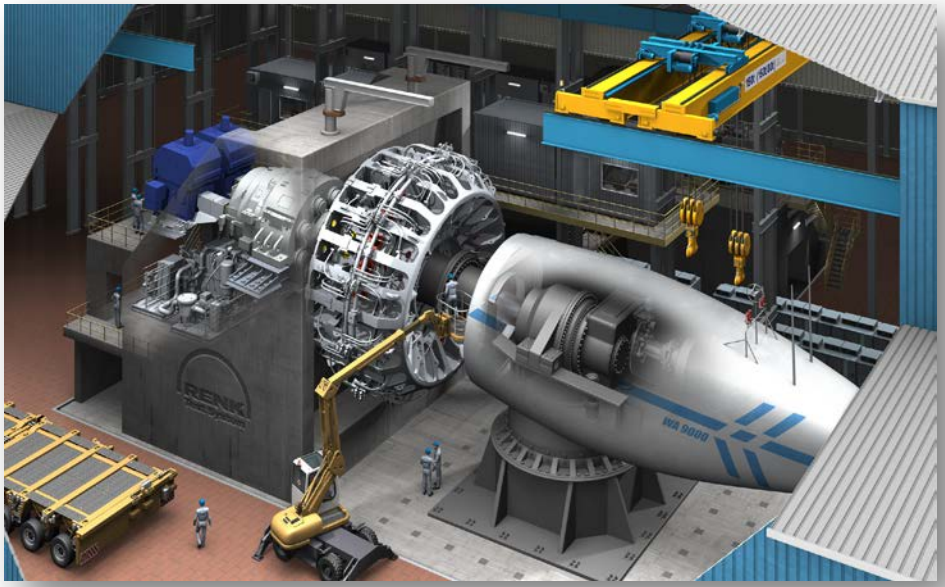

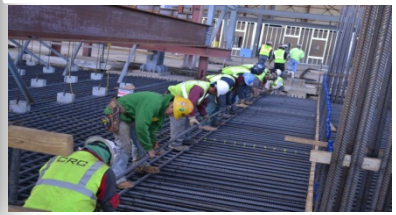

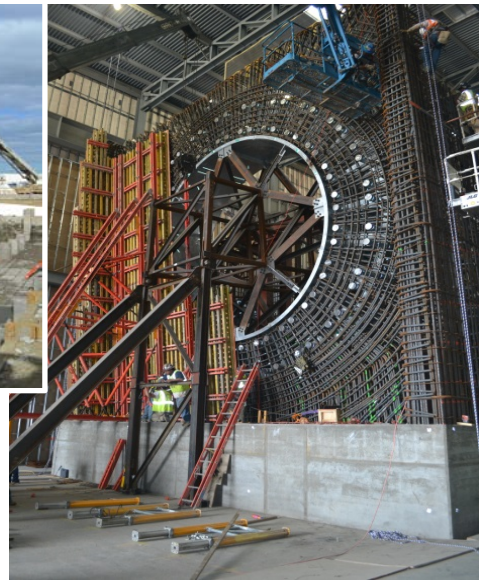

15 MW Test Bench Performance Specifications	
Test Power	15,000 kW
Maximum Torque	16,000 kNm
Maximum Speed	17 rpm
Inclination	6 °
Static Axial Force	± 4,000 kN
Static Radial Force	± 8,000 kN
Static Bending Moment	± 50,000 kNm

Building the Large Stand

Building the Large Stand

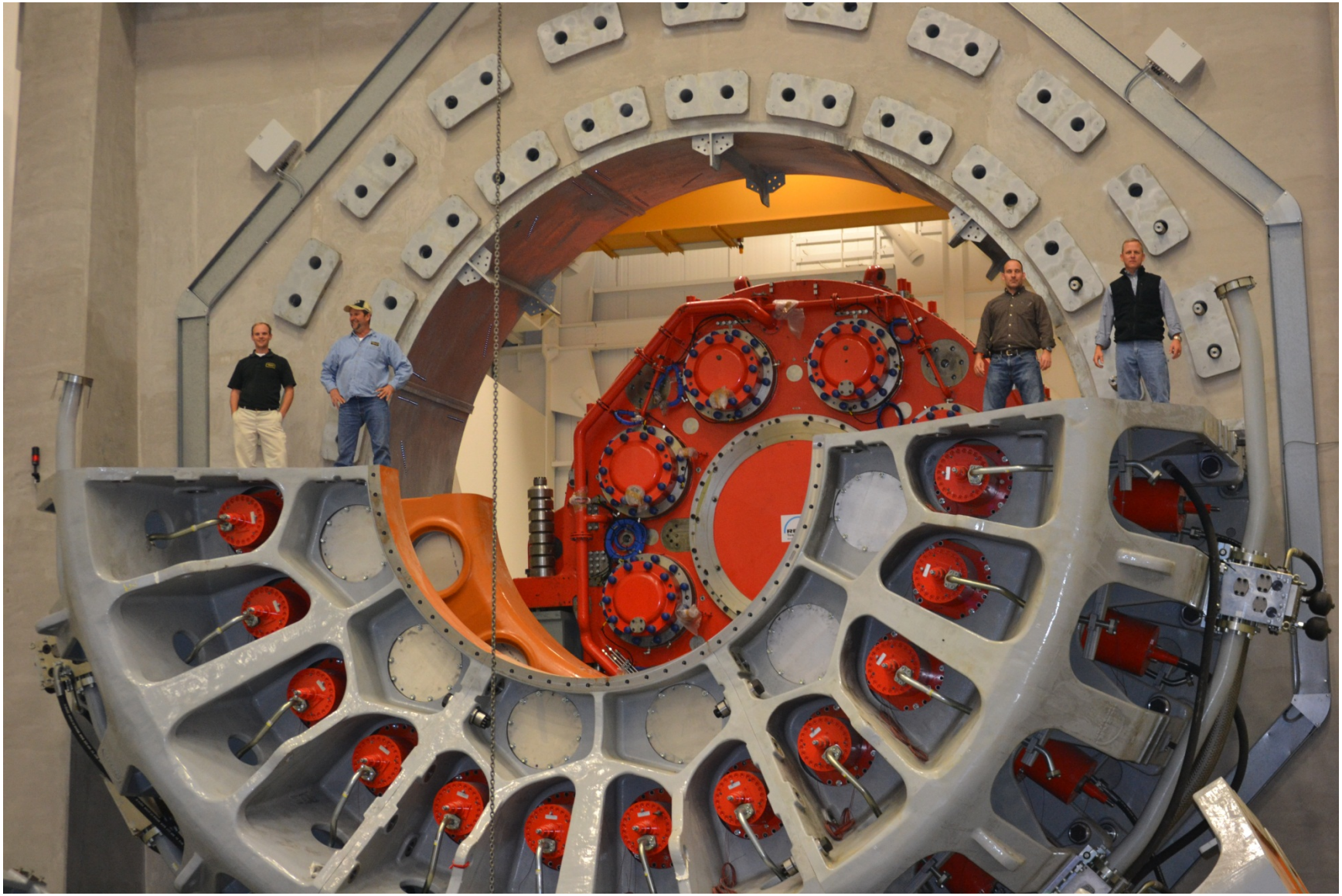

Building the Large Stand

Operating the Dynamometers

Motor Drive System

- 11,000 HP Drive Motor on Small Test Stand
- Two (2) 11,000 HP Drive Motors on Large Test Stand
- Cooled via Plant Water

Facility Single Line Diagram

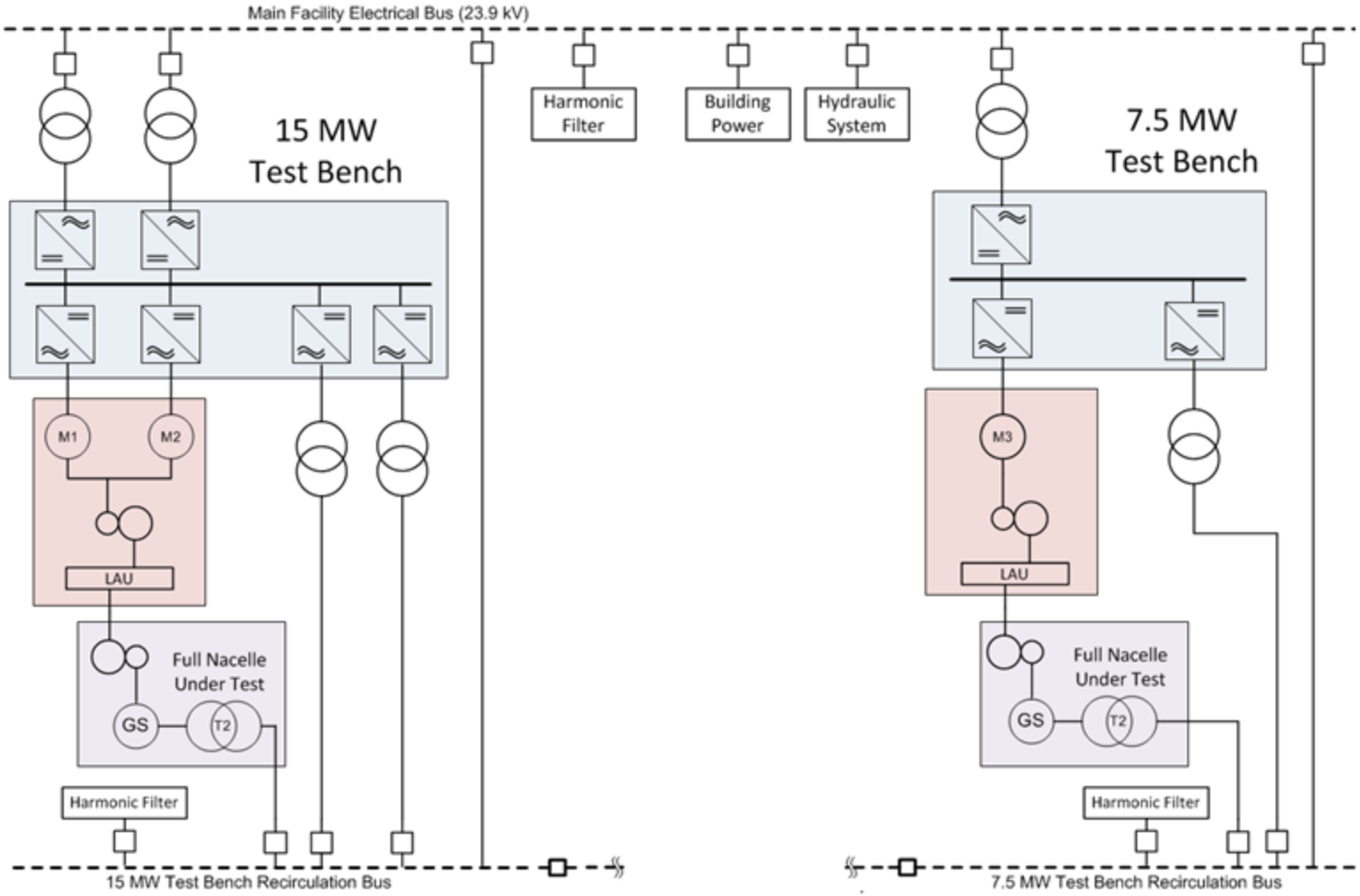

What about electrical analysis?

With all of the installed electrical capabilities, SRNL and Clemson University proposed a second project to DOE for funding.

- $2M DOE grant awarded
- Matched with $8M of funding from various utility and industrial partners
- Proposed an innovative approach to fault ride through analysis – using both a power electronics solution along with a reactive divider to create low voltage fault events

Facility Single Line Diagram

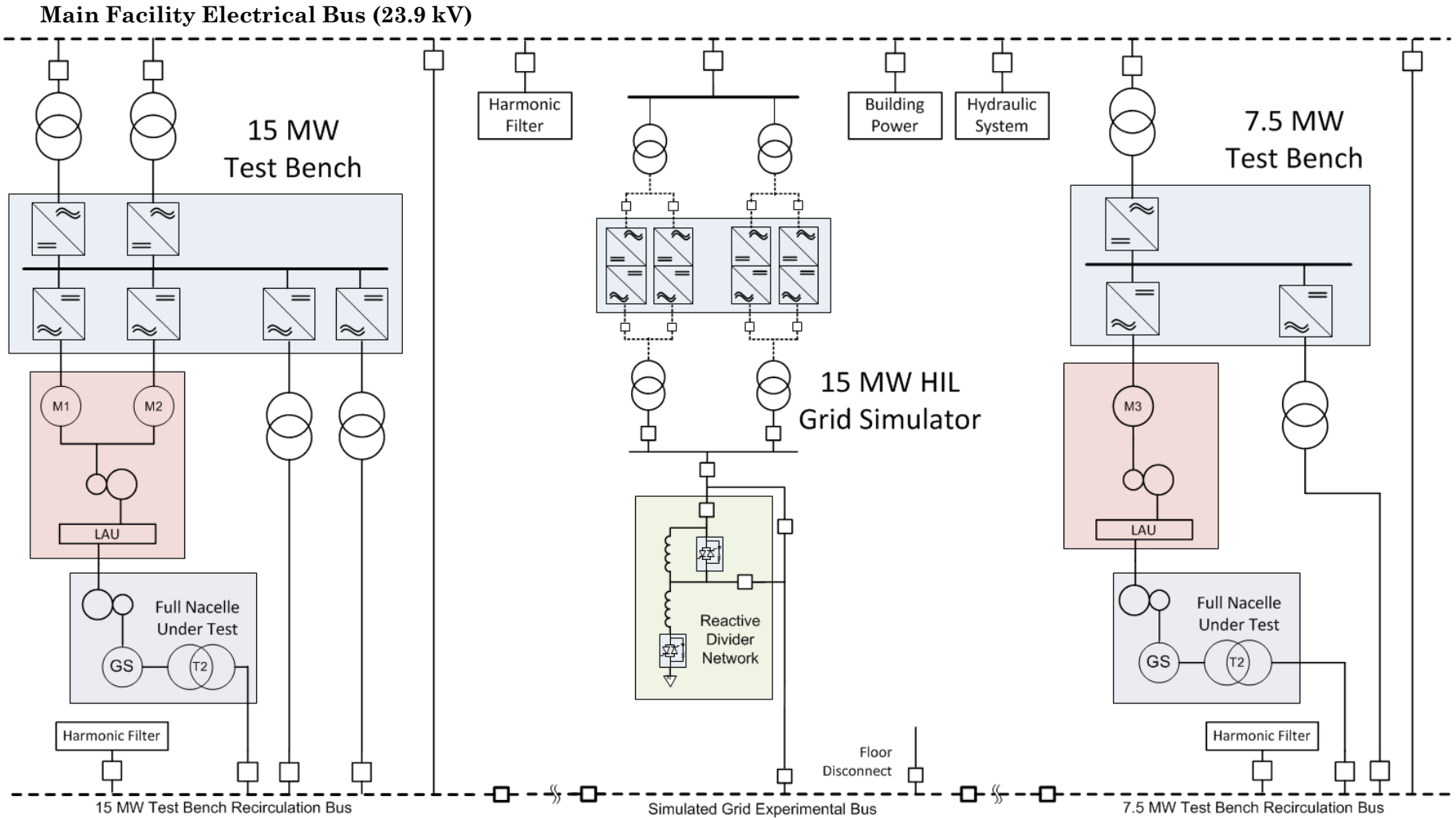

eGRID Single Line Diagram

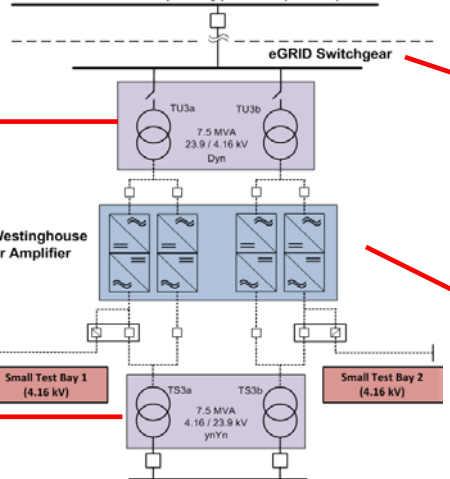

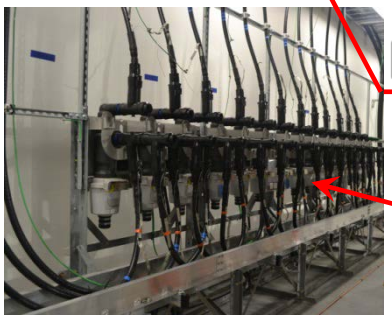

Configuration Switchgear

SCR Fault Switches

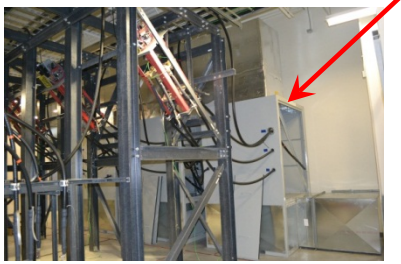

Variable Resistors

Air-Core Reactors

Electrical Capabilities

Overall Electrical Capabilities	
Main Test Bay	
Nominal Voltage	24 kV (50/60 Hz)
Nominal Power	15 MVA (7.5 MVA)
Frequency Range	45 to 65 Hz
Sequence Capabilities	3 and 4 wire operation
Overvoltage capabilities	133% Continuous Overvoltage
Fault Simulation	Yes (includes Reactive Divider)
Hardware-In-the-Loop	Yes
Small Test Bays 1 and 2	
Nominal Voltage	4160 V (50/60 Hz)
Nominal Power	3.75 MVA (3 MW @ 0.8 PF)
Frequency Range	0 to 800 Hz
Sequence Capabilities	3 and 4 wire operation
Overvoltage capabilities	133% Continuous Overvoltage
Fault Simulation	Limited to Converter Only
Hardware-In-the-Loop	Yes

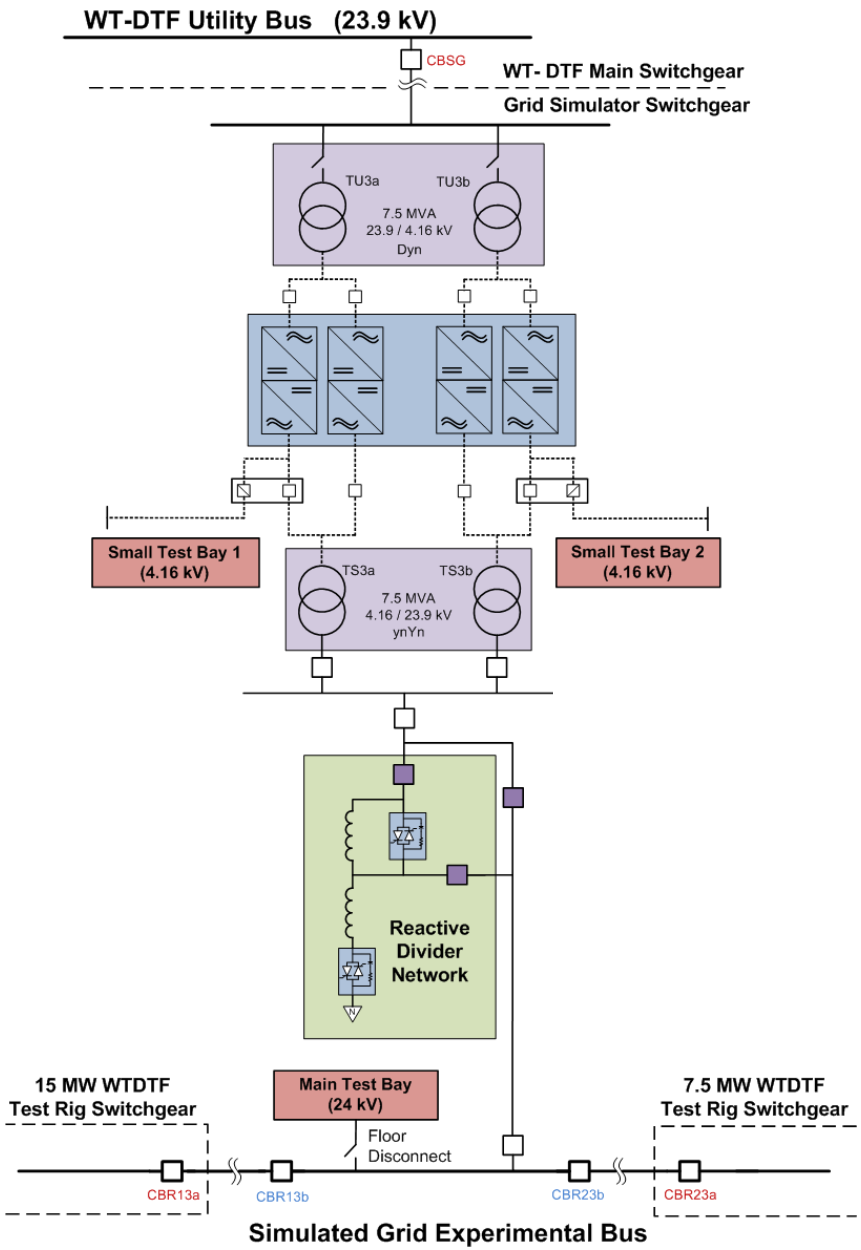

Reactive Divider Network

Safety Considerations

- Access controlled room
- Automatic grounding system when not in service

Voltage Isolation

- 35 kV insulation system
- 2500 A (100 MVA) DUT fault duty

Performance and Flexibility

- Remote control of all elements allows for setup and operation without the need for room access
- Individual phase operation allows for thousands of three phase impedance combinations

Table of Fixed Reactance Combinations

Fixed Switch Positions	Shunt Fixed (mH)	Series Fixed (mH)	Total Shunt (mH)	Total Series (mH)
1-1-1-0	0	25	0-25	25-50
1-1-0-0	0	50	0-25	50-75
1-0-0-0	0	75	0-25	75-100
0-1-1-1	25	0	25-50	0-25
0-1-1-0	25	25	25-50	25-50
0-1-0-0	25	50	25-50	50-75
0-0-1-1	50	0	50-75	0-25
0-0-1-0	50	25	50-75	25-50
0-0-0-1	75	0	75-100	0-25

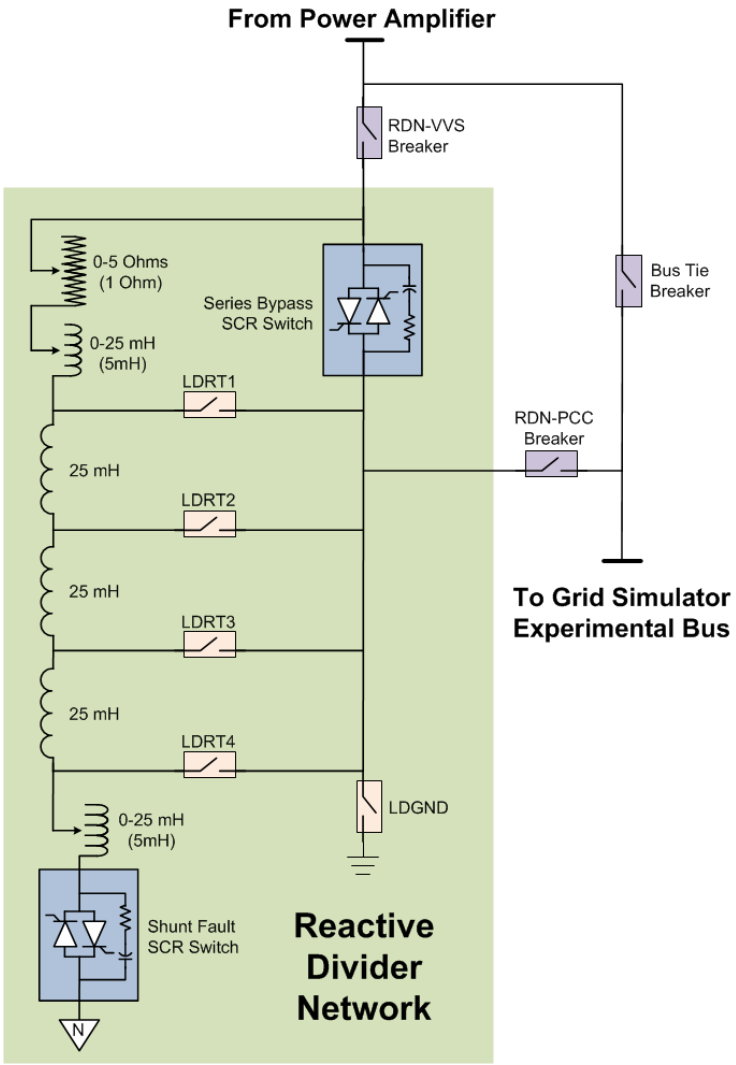

Reactive Divider Network

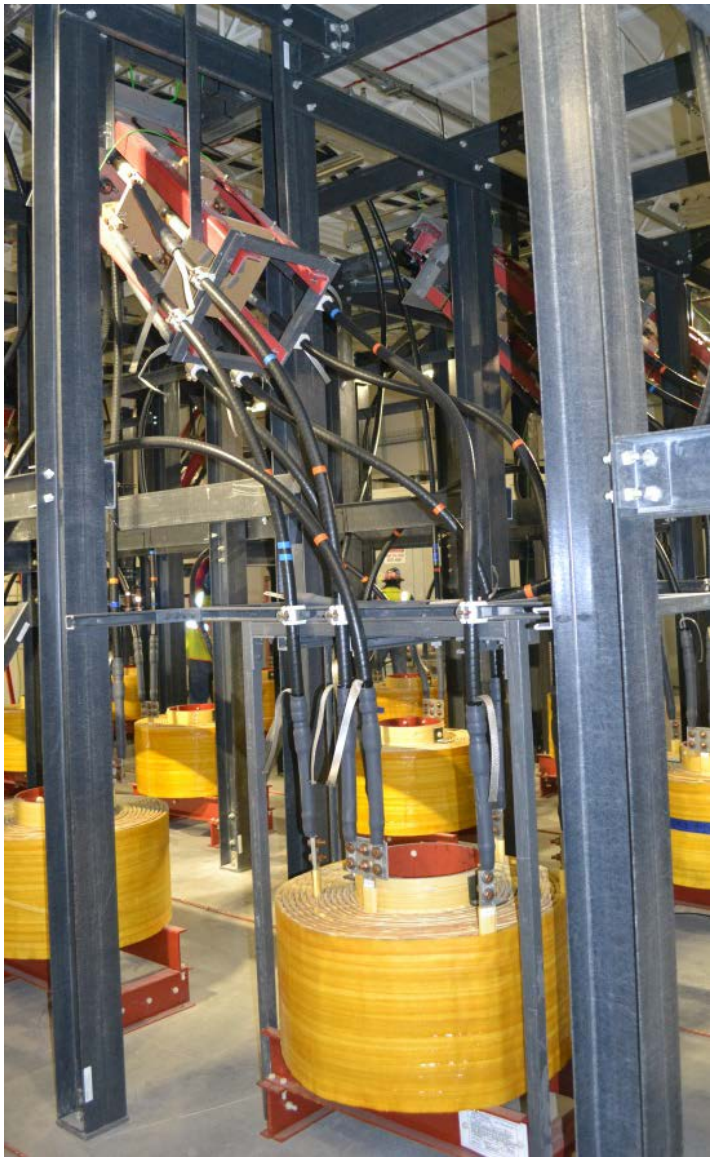

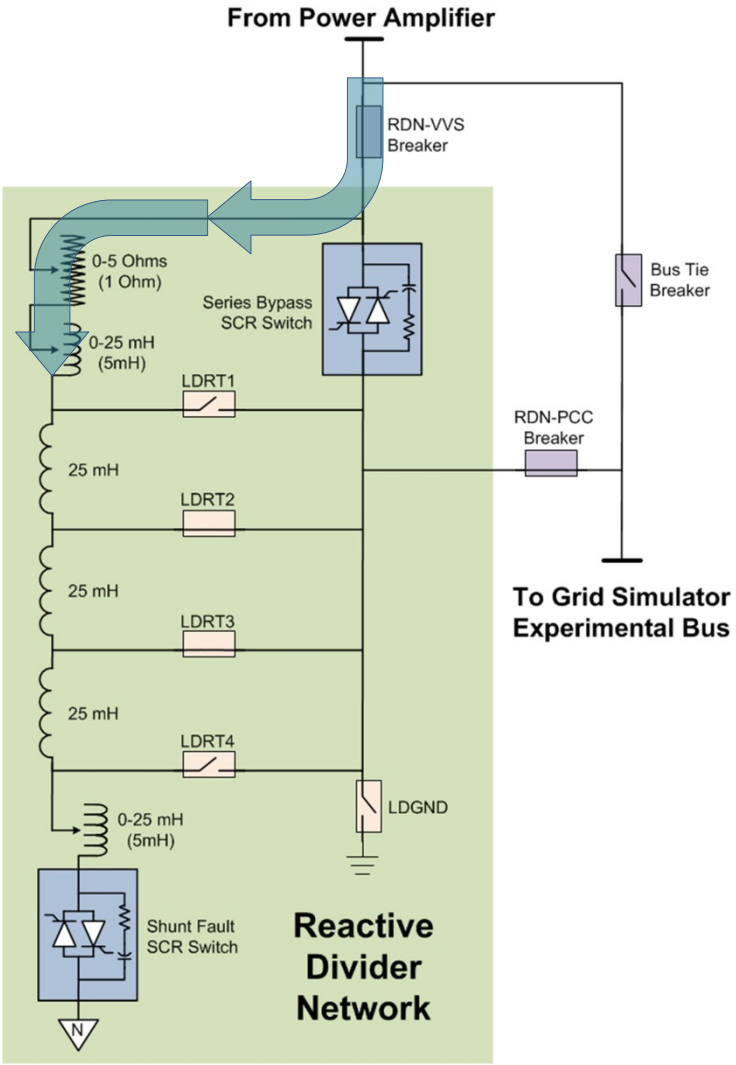

Fixed and Variable Reactors

Reactive Divider Network

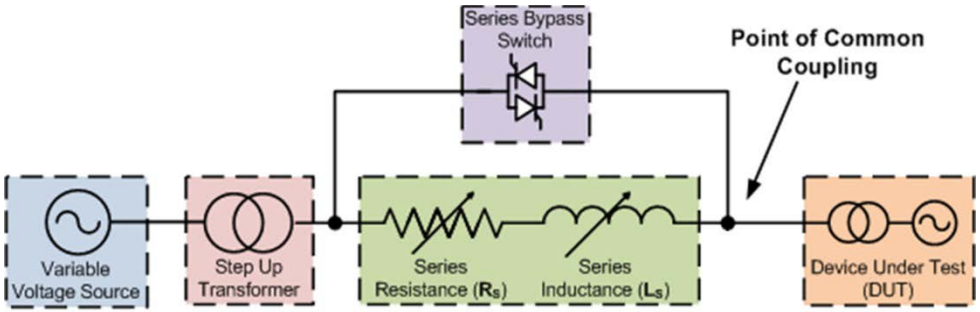

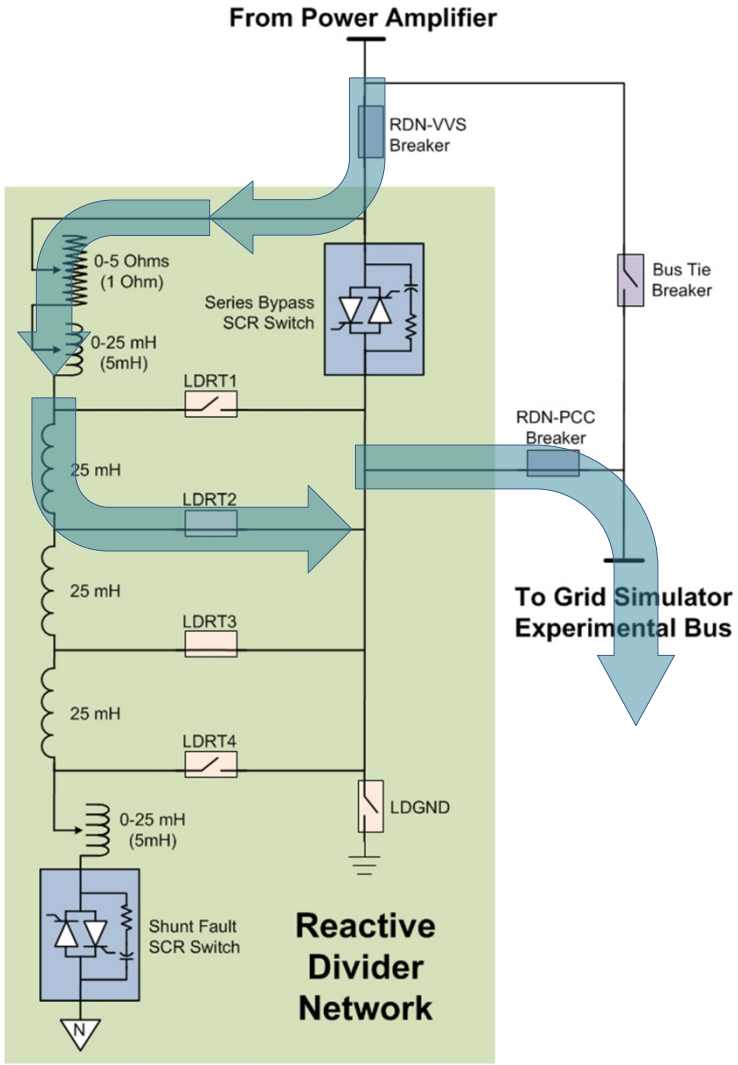

Table of Fixed Reactance Combinations

Fixed Switch Positions	Shunt Fixed (mH)	Series Fixed (mH)	Total Shunt (mH)	Total Series (mH)
1-1-1-0	0	25	0-25	25-50
1-1-0-0	0	50	0-25	50-75
1-0-0-0	0	75	0-25	75-100
0-1-1-1	25	0	25-50	0-25
0-1-1-0	25	25	25-50	25-50
0-1-0-0	25	50	25-50	50-75
0-0-1-1	50	0	50-75	0-25
0-0-1-0	50	25	50-75	25-50
0-0-0-1	75	0	75-100	0-25

TECO Westinghouse

TWMC Power Amplifier	
Installed Power	20 MVA (15 MW @ 0.8 PF)
Rated Power	15 MVA (12 MW @ 0.8 PF)
Cabinet Power Split	4 x 3.75 MVA or 2 x 7.5 MVA
Rated Voltage	0 - 4160 V
Overvoltage	133 % Rated Output Voltage
Multilevel Operation	7 - Levels (9 - Levels Overvoltage)
Frequency Range	3 - 66 Hz
Overload Capability	110% for 60 s (10 min duty cycle)

Power Module

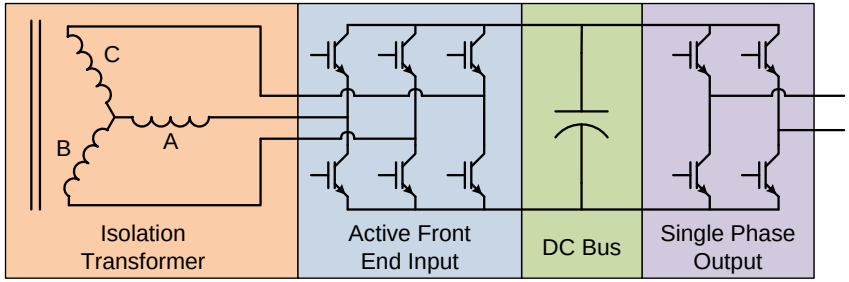

Individual power module with three phase input and single phase output

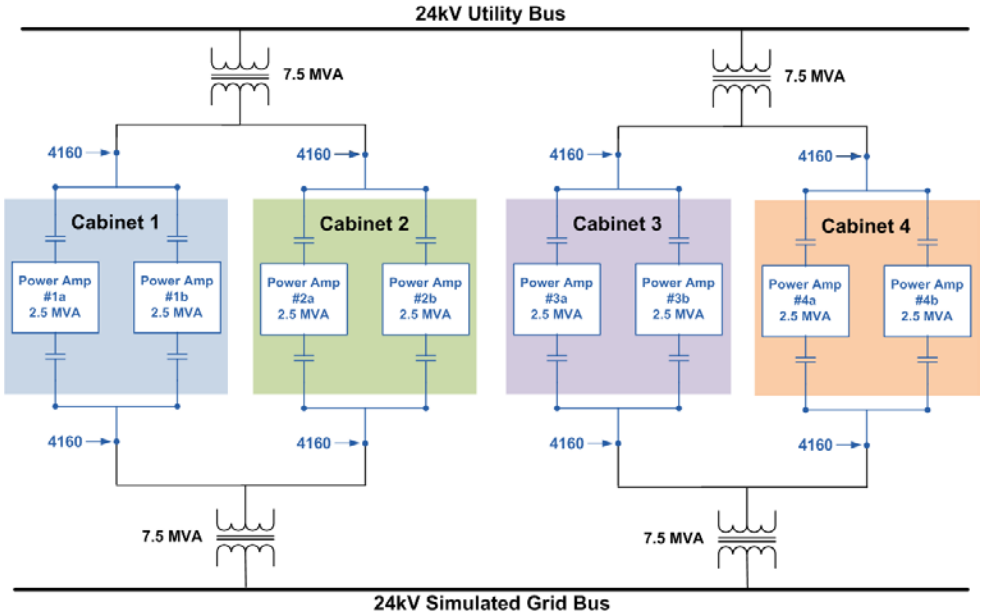

8 Parallel Amplifiers arranged into 4 Cabinets

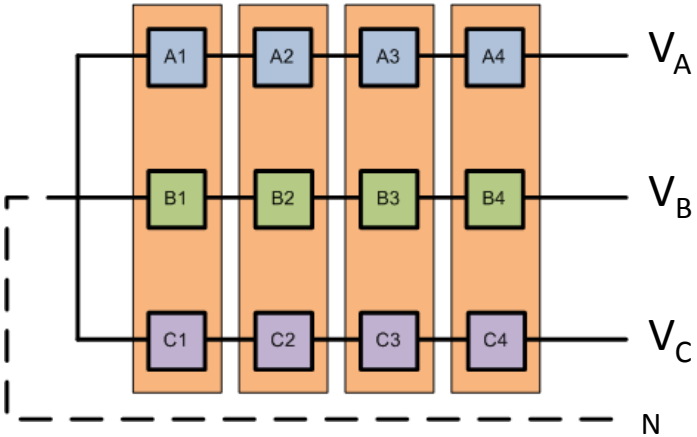

4 Power Slices per Amplifier Section

TECO Westinghouse

TECO Westinghouse

Phase Shifted Carrier PWM

- High degree of harmonic cancelation due to multilevel architecture
- Increased reference sampling fidelity

Sampling fidelity is further increased by using asymmetrical sampling of each individual carrier

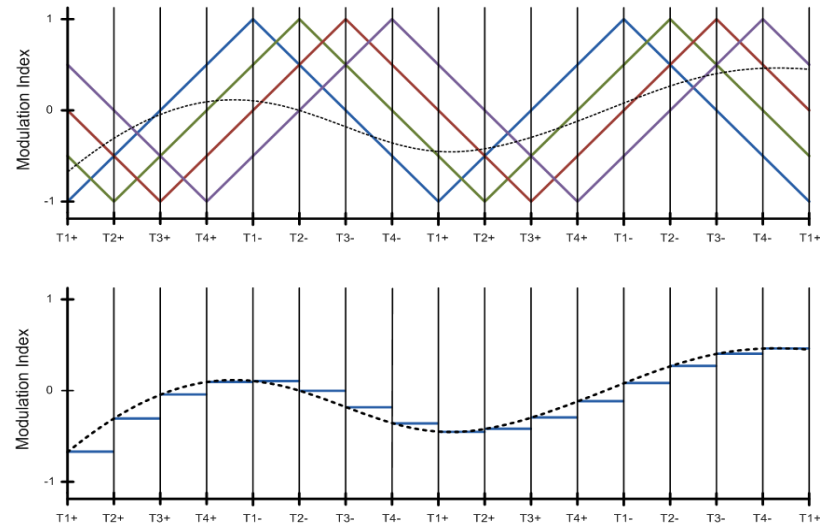

Synchronous Sampling up to 12 kHz

Power Amplifier Output Harmonic Spectrum (Fs = 2 kHz)

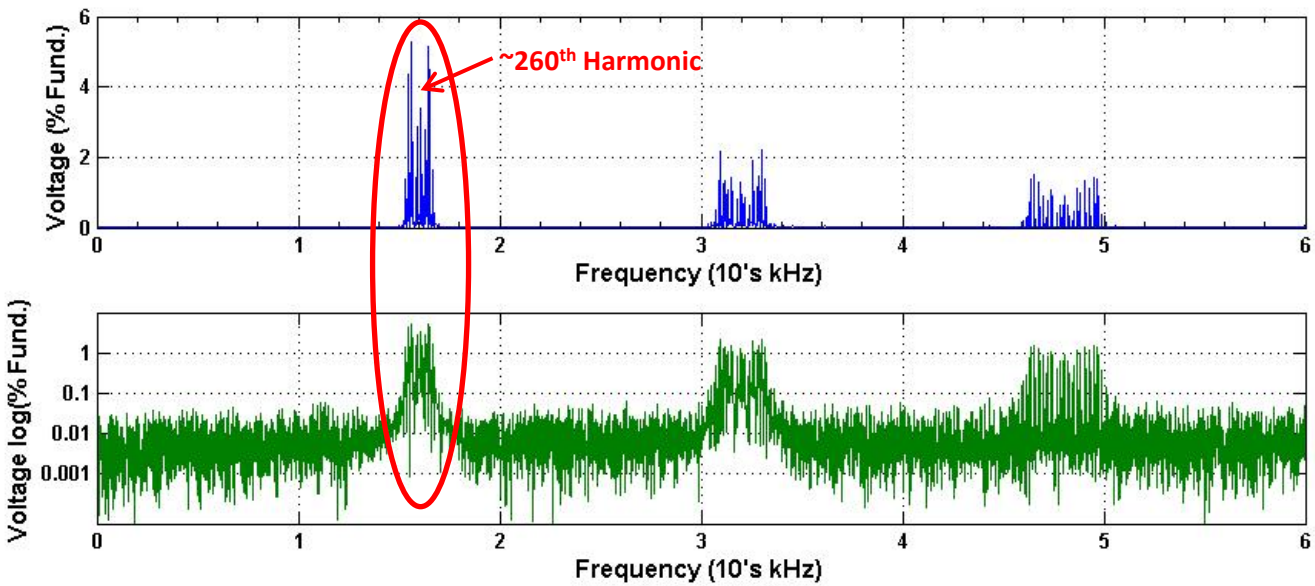

First noise mode is at 8 times the switching frequency

Reference resolution also at 12 kHz using asymmetrical sampling

<u>Total Harmonic Distortion:</u>

0.15% THD (0 – 50th)
0.24% THD (0 – 100th)
0.30% THD (0 – 150th)
0.34% THD (0 – 200th)

Power Hardware in the Loop

15 MW TECO-Westinghouse
Power Amplifier

National Instruments
Interface Controller

Voltage and Current
Set Point Commands
and Measurements

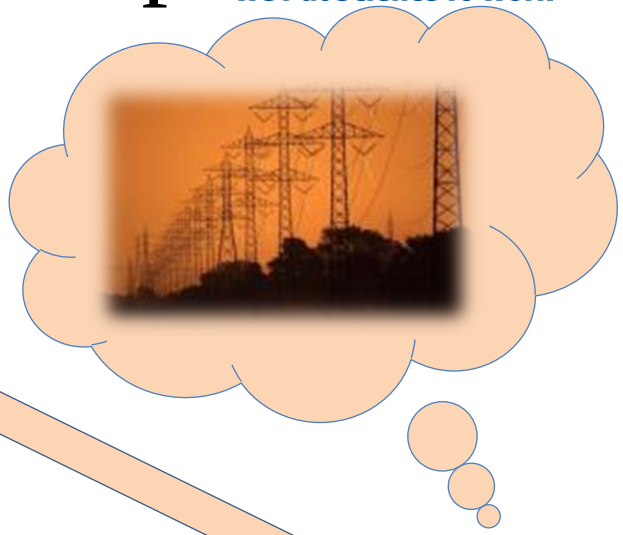

Real Voltages and Currents
associated with ***BUS #N***

Device Under Test
*"I'm connnected at **Bus #N**"*

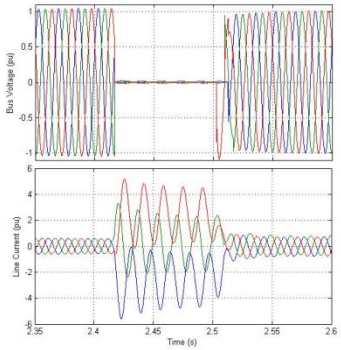

Real Voltage and
Current Measurements

BUS #N
Voltage and Current
Information

RTDS
Real Time Digital Simulator

SRNL High Current Calibration Laboratory

100,000 Amps Pulse Capability

SRNL High Current Laboratory

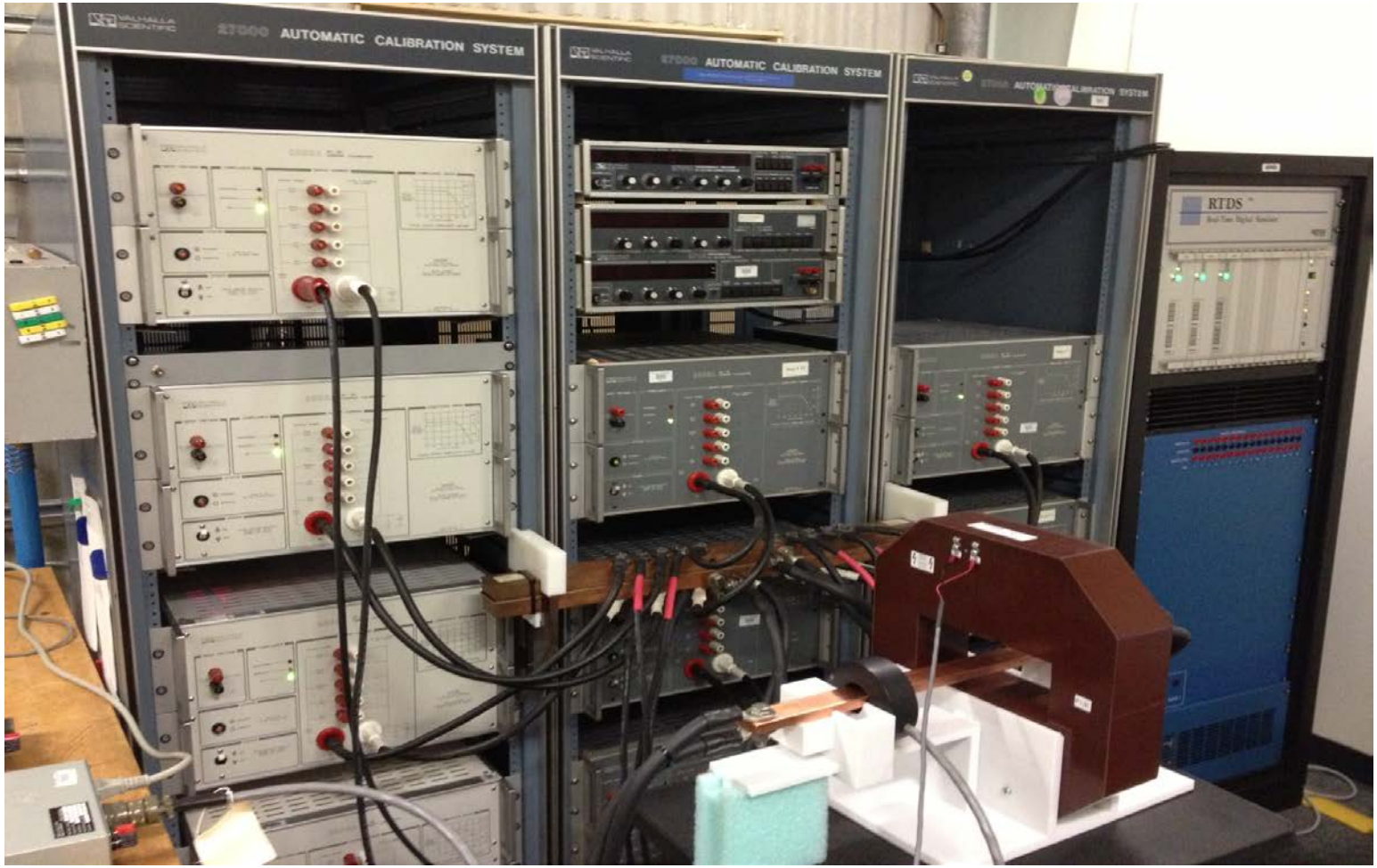

SRNL High Current Calibration Laboratory

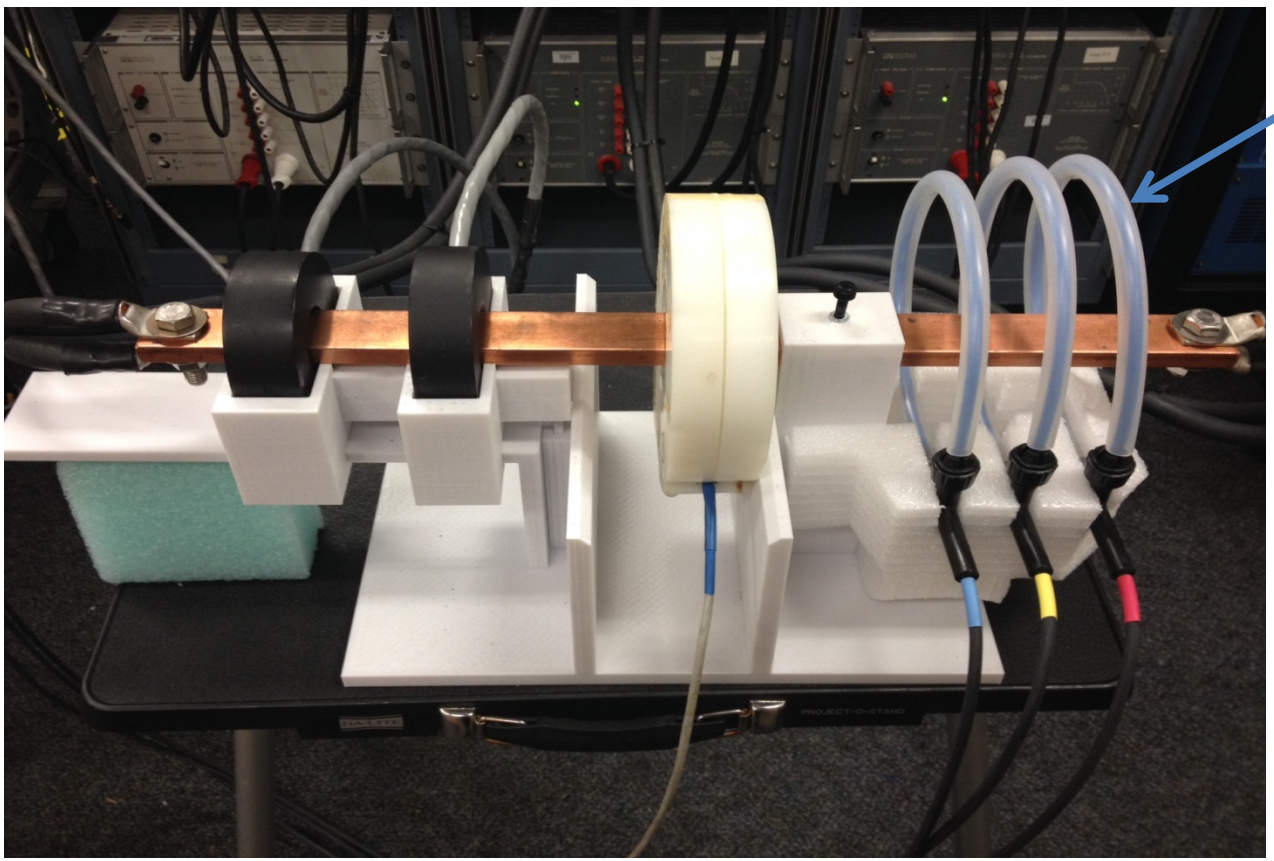

Clemson
3 Phase CT

eGRID Applied to Resiliency

- Ability to test and validate high powered components off the grid but under actual Electrical conditions with the following capabilities
  - Validate Models by running simultaneous actual hardware in the loop
  - Teco-Westinghouse 3 Phase 20MVA Power Amplifiers can duplicate actual grid events
  - Reactor Divider Network can be combined to duplicate variable resistive and high inductive loads
  - Four wire system allows phase to phase faults, phase to ground faults

Clemson University Wind Turbine Drive Train Test Facility
Electrical Grid Monitoring System Communication Diagram
SEL Project 0P4585.000.00, Rev. 7

Thursday, September 26, 2013

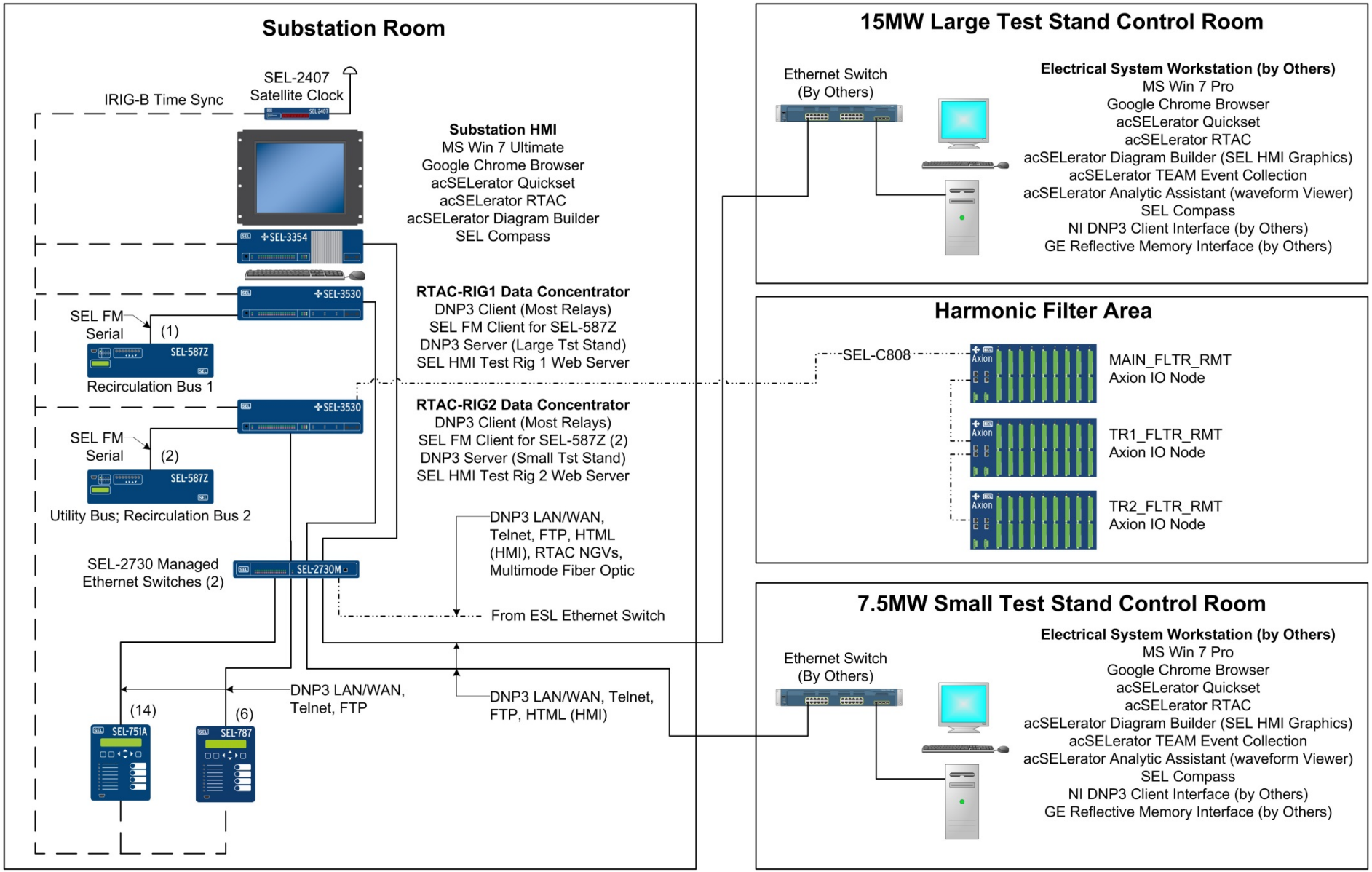

eGRID Applied to Cyber

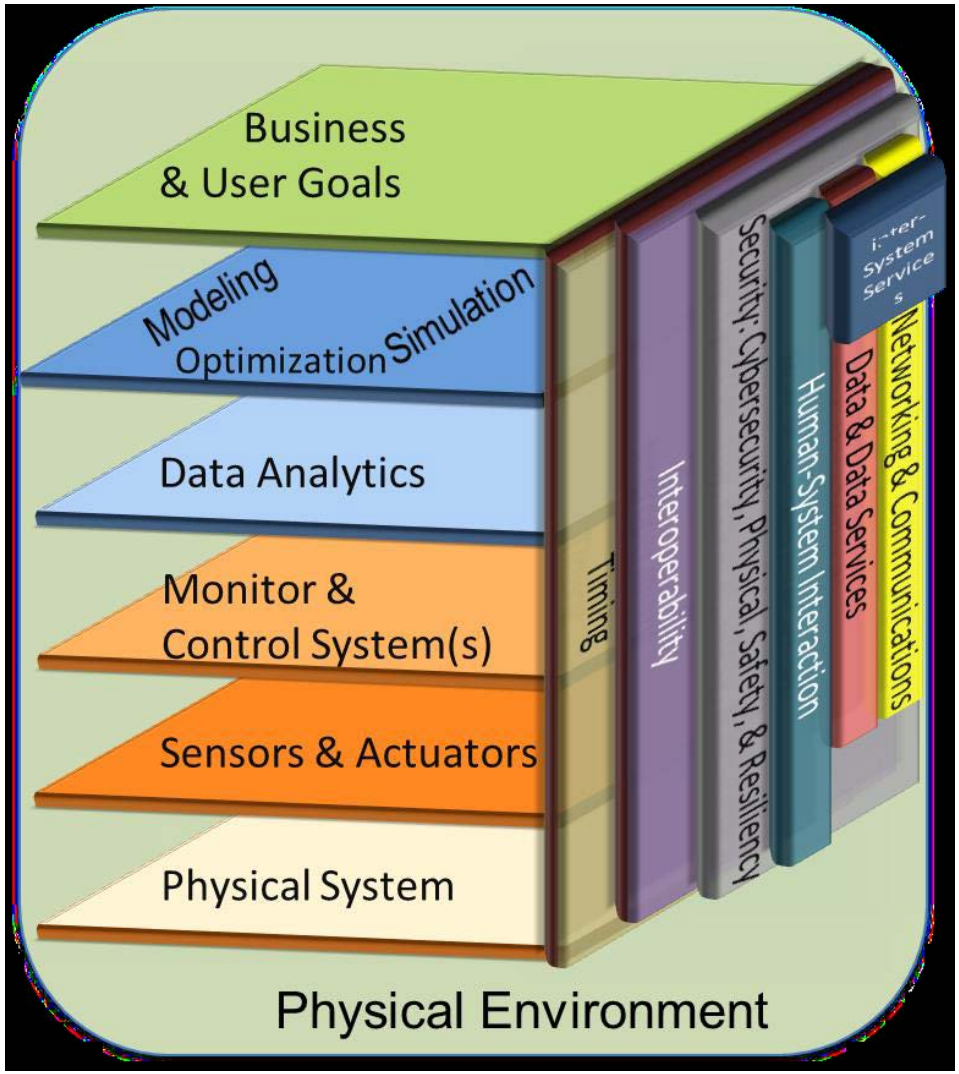

Grid Integration Evaluation Testing for Resiliency

SRNL
SAVANNAH RIVER NATIONAL LABORATORY
Operated by Savannah River Nuclear Solutions, LLC
We Put Science To Work

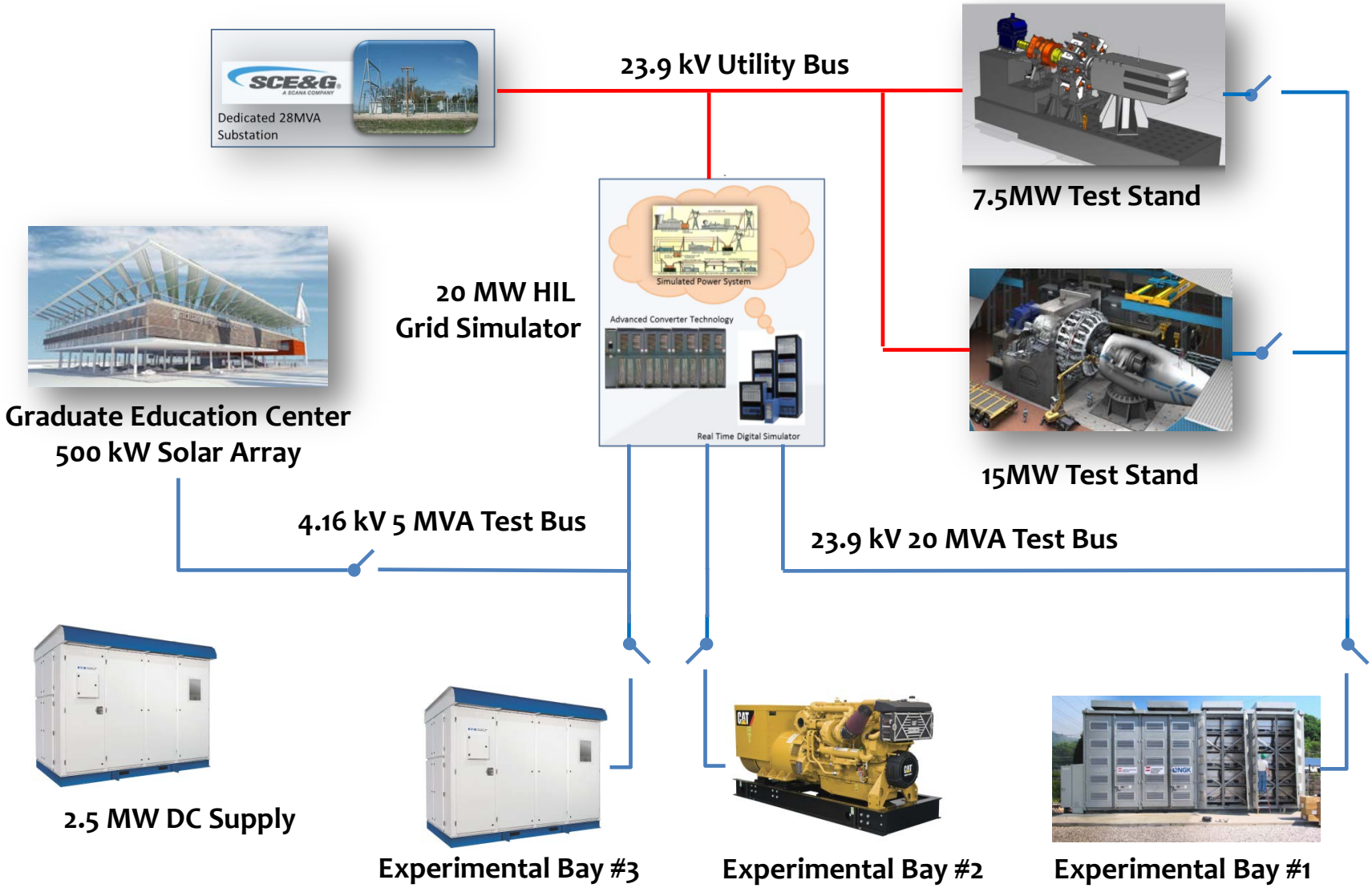

Applications for Resiliency

Large Inverters

EV Charging Stations

Utility Scale Energy Storage

Large Solar PV Converter

Micro-Grid Evaluations

Aerospace

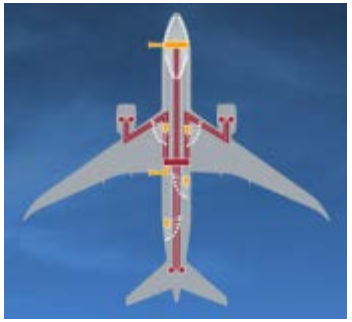

Wind Energy

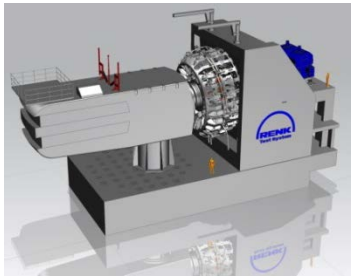

Traditional Distributed Generation (Diesel, NG. etc.)

Smart Grid

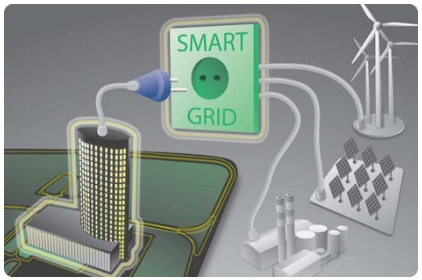

Thank you