Grid Inertial Response-Based Probabilistic Determination of Energy Storage System Capacity under High Solar Penetration

Meng Yue

The Resilient Smart Grid

October 16-17, 2014

BROOKHAVEN NATIONAL LABORATORY
a passion for discovery

Office of Science
U.S. DEPARTMENT OF ENERGY

Outline

- Concerns with the frequency responses for increasing renewables penetration;
- Modeling of solar and battery energy storage systems
- Probabilistic modeling of disturbances associated with inertia response
- Parameterization of probabilistic models for disturbances;
- A Monte Carlo based algorithm for sizing BESS
- An example case study.

Degrading Grid Inertia Responses for Increasing Renewables Penetration and Mitigation

- Concerns:
  - Displacement of the conventional generators and the associated inertia;
  - Fast renewable transients may significantly increase the power mismatch;
  - The frequent transients may be coupled with the existing disturbances.
- Mitigation:
  - Degraded inertia responses may trigger the first step of under-frequency load shedding and increase the risk of cascading outages
  - Responsive but expensive ESSs are effective and the question is how much capacity is needed?
  - Depending on the confidence level of achieving satisfactory inertia response performance, all possible disturbances and combinations of the disturbances that may occur with different frequencies need to be assessed.

Solar PV/BESS Energy System Configuration

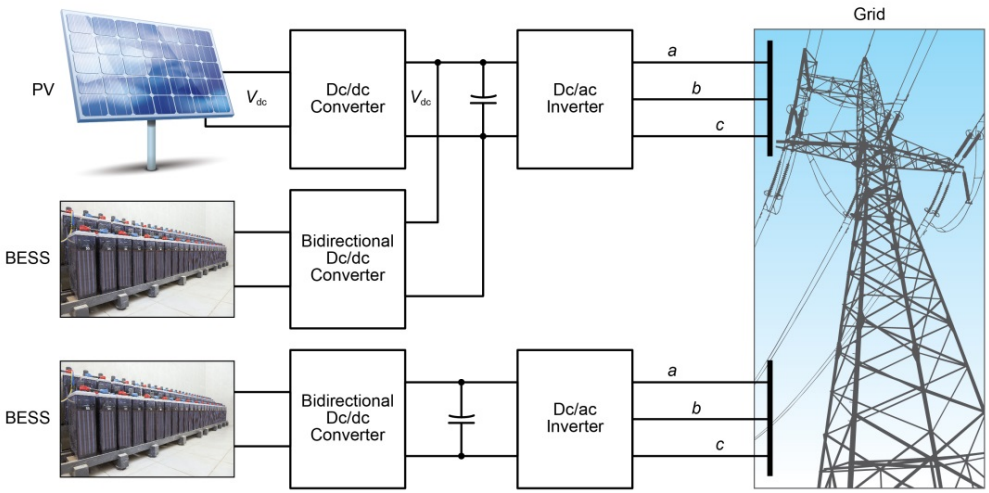

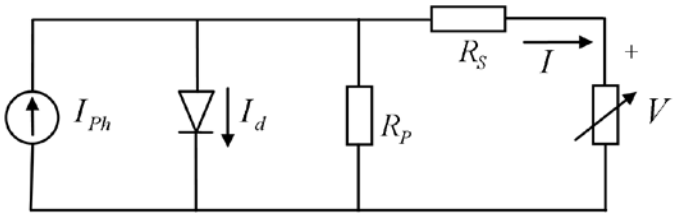

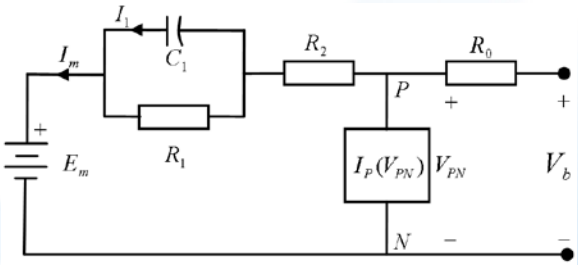

- Modeling solar and BESS in terms of equivalent electrical circuits
- Development and implementation of a control system including
  - Maximum power point tracking (MPPT) for dc/dc converter
  - Different control modes for real and reactive power delivery, and
  - Frequency and voltage regulation.

Probabilistic Modeling of Disturbances: Fast Solar Transients

- An example irradiance change pattern induced by a cloud transient

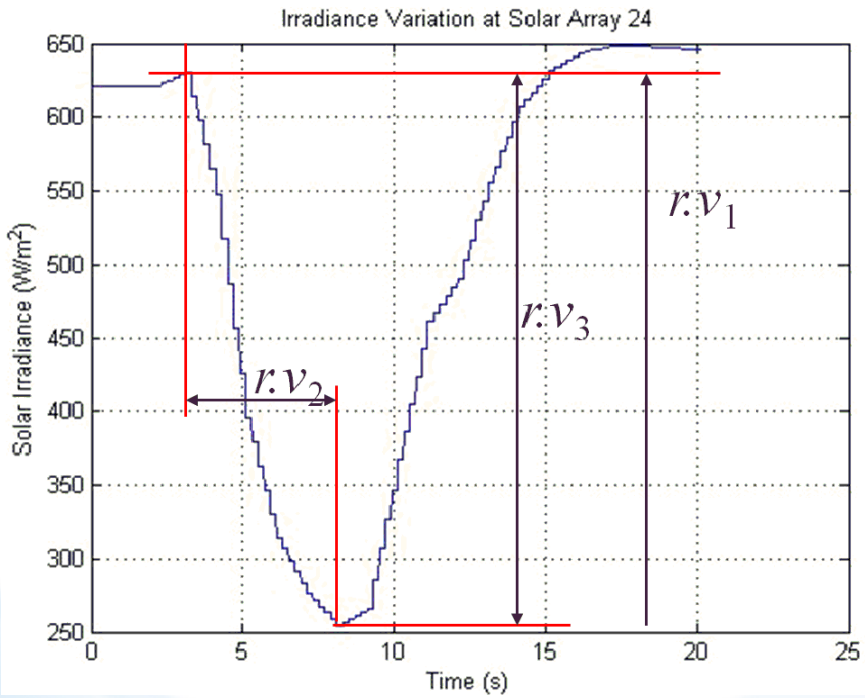

To capture the statistics of the cloud transients, a set of random variables may be used to characterize the irradiance variation:

(1) how often such transients occur;
(2) the initial irradiance level ($r.v_1$);
(3) how fast ($r.v_2$) the irradiance change over the transient
(4) how much the irradiance change over the transient ($r.v_3$); and
(5) the potential correlations between the different types of randomness

Probabilistic Modeling of Disturbances: Generator Trip

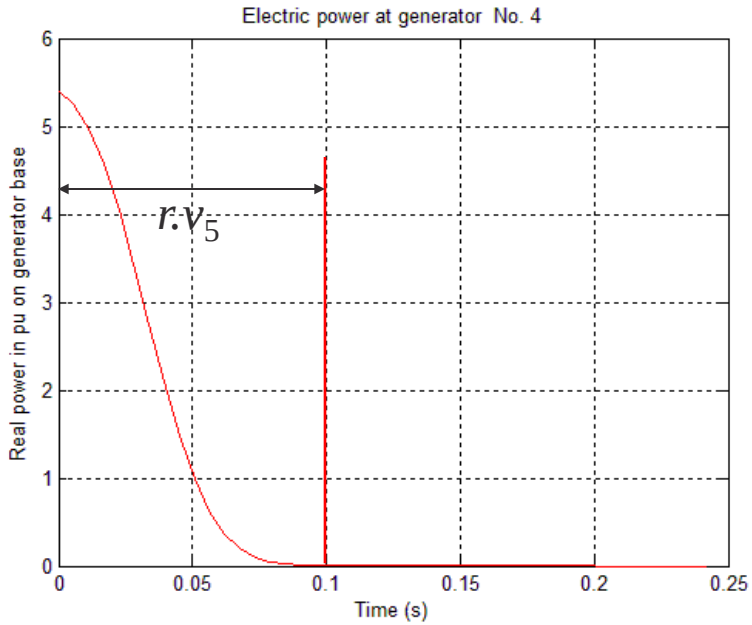

- The random variable introduced for this generator outage model is the time for the generation to decrease to zero ($r.v_5$);
- Solar plant failures can also be modeled similarly.
- The common cause failures (CCFs) of two generators or two solar plants are explicitly considered in this study using a β-factor CCF model

Data Analysis and Parameterization

1. The solar transient frequency was obtained using the high-resolution (1-sec) solar resource data from LISF collected in a one-year period of 2011.
2. A fast transient is defined as a transient that starts with the solar irradiance above 500 W/m^2 and the percentage of deviation from the initial value is above 50% within 15 seconds.
3. A total number of 2,283 fast transients were identified.

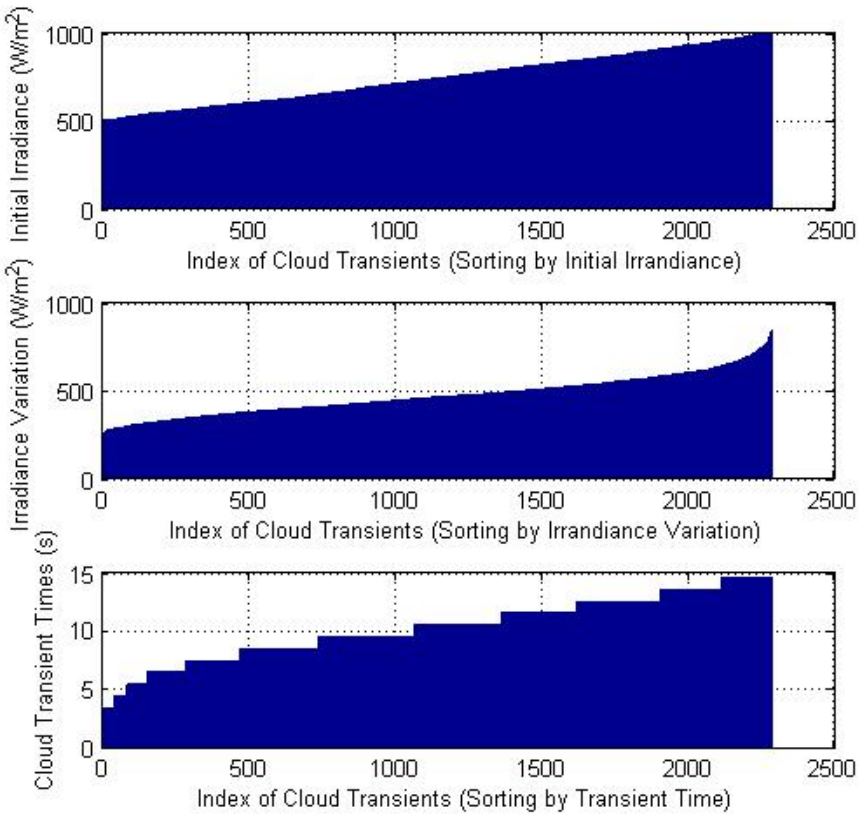

Histograms of sorted initial irradiance, maximum irradiance deviation, and transient times from collected data

Data Analysis and Parameterization (cont'd)

- Potential correlation of the random variables representing irradiance values, percentage of deviations, and transient times
  - Scatter plot of solar transient parameters and correlation coefficient calculation
  - Both suggest that independent random variables can be used to describe the solar transients.

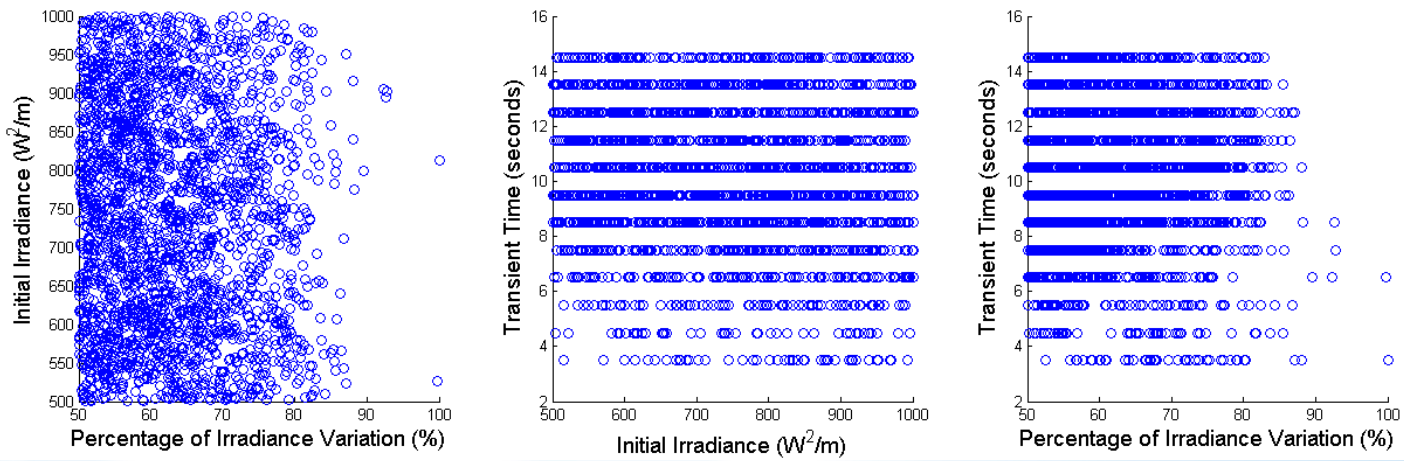

A scatter-plot of solar transient parameters

Data Analysis and Parameterization (cont'd)

- The occurrence rate of a fast solar transient at an array can be estimated using the transient data in a specific location, i.e., about 2,283/(8,760/2)=0.52 per hour;
- The hourly probability is approximately $P_{ST}(t) = 1 - e^{-0.52\times 1} = 0.41$ and the probability of simultaneous occurrence of such transients at all, e.g., eight, arrays is $P_{SST}(t) = 0.41^8 = 7.4E\text{-}4$ per hour;

Failure parameters of generators and solar plants

Components	Generator	Solar Plant		Generator	Solar Plant
Failure modes	Trip	Transient	Trip	CCF β-factor	
Failure parameters	4.6E-4/hour	7.4E-4/hour	6.0E-6/hour	0.1	
Data sources	[1]	Collected data	[2]	[3]	

[1] WSCC Reliability Subcommittee, "Probabilistic Based Reliability Criteria, Phase I: Event Probability Development and Implementation Plan," an online report, 1998.
[2] IEEE Guide to the Collection and Presentation of Electrical, Electronic, Sensing Component, and Mechanical Equipment Reliability Data for Nuclear Power Generating Stations, IEEE, Inc., 1984.
[3] J.W. Hickman et al., "PRA Procedures Guide: A Guide to the Performance of Probabilistic Risk Assessments for Nuclear Power Plants," available online at http://www.nrc.gov/reading-rm/doc-collections/nuregs/contract/cr2300/vol1/cr2300v1-b.pdf.

Probabilistic Modeling of High-order Disturbances

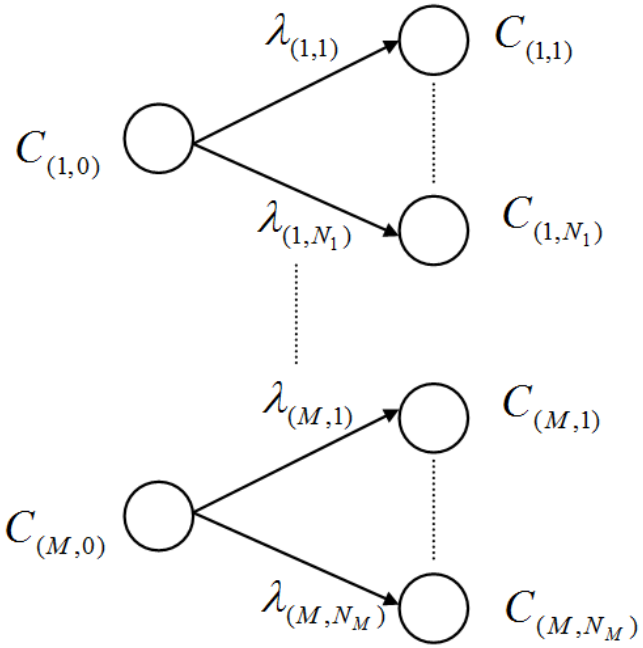

For a system consisting of M components and each component has N_i failure modes (states), which can be represented as $C_{(i,j)}$. $\lambda_{(i,j)}$ indicates the transition rate from the normal state of Component i to its jth failure mode. $C_{(i,0)}$ indicates the component's normal state. i.e., there is no failure with Component i.

$$P(C_{(i,0)},t) = e^{-\lambda_i t}$$

$$P(C_{(i,j)},t) = \frac{\lambda_{(i,j)}}{\lambda_i}(1-e^{-\lambda_i t}), \text{ with } \lambda_i = \sum_{u=1}^{N_i} \lambda_{(i,u)}.$$

The probability of a system state is:

$$P(C_{(i_1,0)} \cdots C_{(i_k,j_k)} \cdots C_{(i_l,j_l)} \cdots C_{(i_M,0)},t) = P(C_{(i_k,j_k)},t) \cdots P(C_{(i_l,j_l)},t) \prod_{\substack{u=1 \\ u \neq i_k \\ \cdots \\ u \neq i_l}}^{M} P(C_{(u,0)},t)$$

Sample Generation for A Monte Carlo Simulation

- Develop a list of all second-order disturbances and calculate the probability of each disturbance's occurrence;
- Determine the total number of samples;
- Generate a random number of uniform distribution to select disturbance;
- For each selected disturbance or sample, generate the generation ramp-down curve and/or irradiance profile using the probabilistic models;
- Until all samples are generated.

A Monte Carlo Simulation for BESS Capacity Determination

- A frequency nadir of 59.5 Hz or frequency deviation of Δf =0.5 Hz can be selected as the threshold at which the BESSs are needed;
  1. Starting with zero BESS capacity and all samples are marked for evaluation;
  2. For the given BESS capacity, simulate the frequency responses of the system for each sample scenario;
  3. For a sample scenario, if the largest frequency deviation is smaller than Δf, then move to next sample scenario; otherwise, the scenario is marked for re-evaluation; Do this for all scenarios and record the BESS capacity and number of scenarios that need re-evaluation;
  4. For scenarios that need re-evaluation, increase the ESSs capacity in a step-wise manner;
  5. Repeat from Step 2 until no sample causes frequency nadir lower than the selected threshold or the desired number of samples with frequency deviation less than Δf is achieved.

Case Study: An Example System with Postulated Solar Generation

- The original system is a 16-machine-68-bus system; All of the 16 generators are equipped with turbine governors.
- Three solar power plants are added to the system;
- Three BESSs can be added to the example system as needed;
- Two generators are removed from the system.

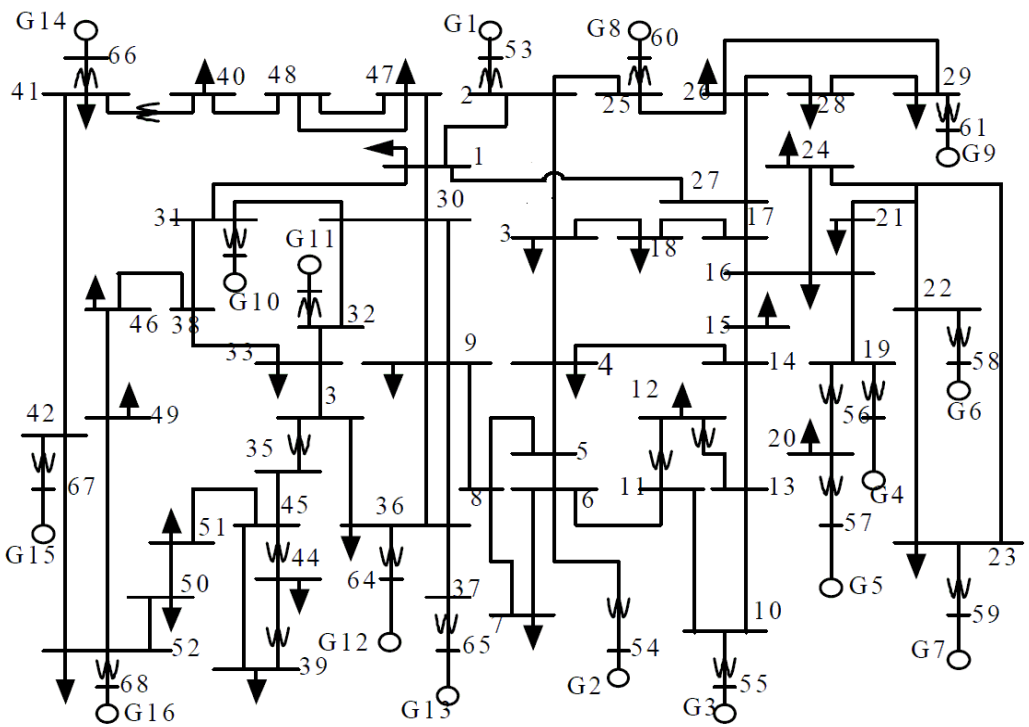

Inertial Response of Sample Scenarios

- A total number of 1,000 samples containing second order sequences only were generated;
- 156 samples contain a solar transient of one or more solar plants while the rest of the samples consist of either common cause failures or simultaneous failures of two generators;
- Transient response of the system for a sample scenario with a loss of generator and/or a solar transient at one of PV plants.

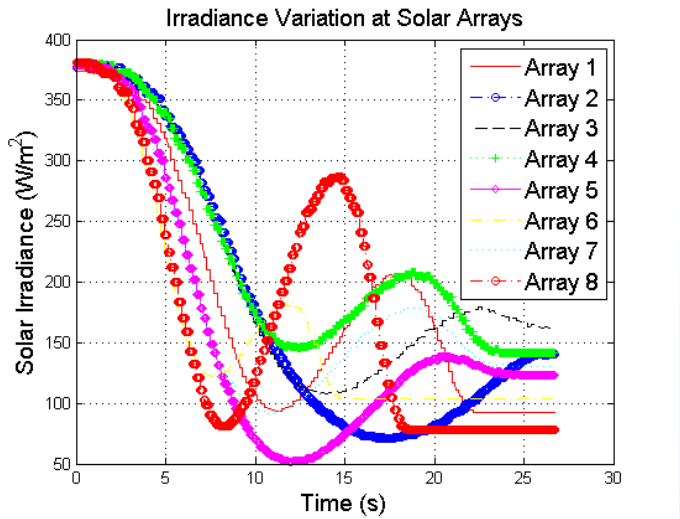

Example irradiance profiles at the solar plants

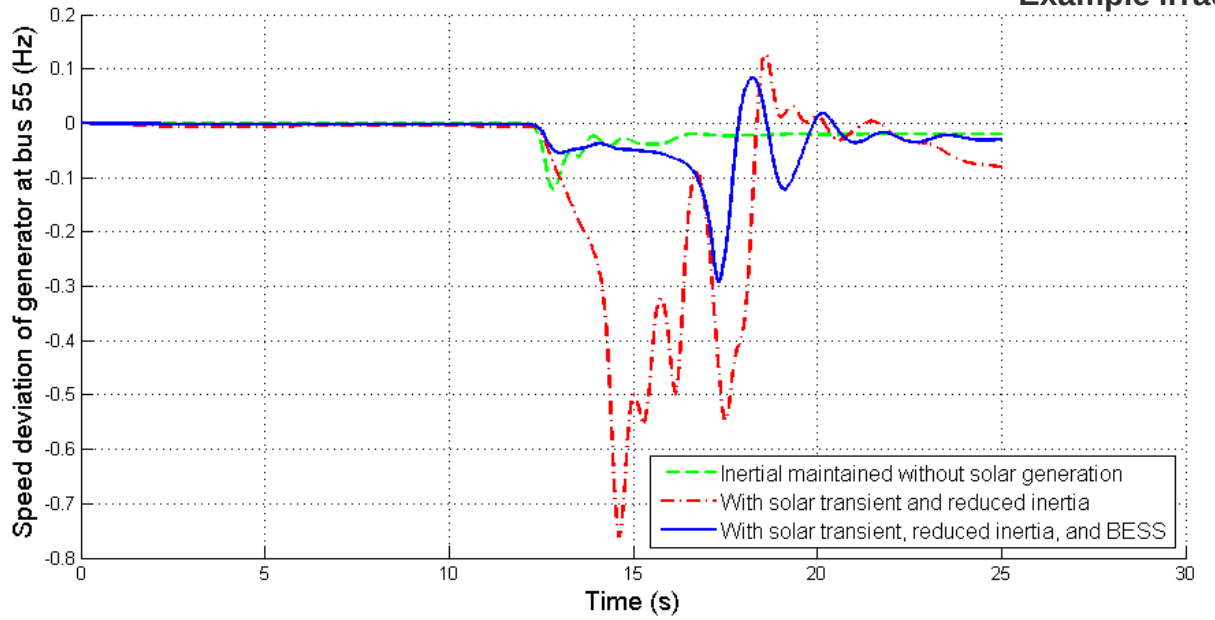

Frequency deviations for various scenarios under a loss of generator

Simulation Results

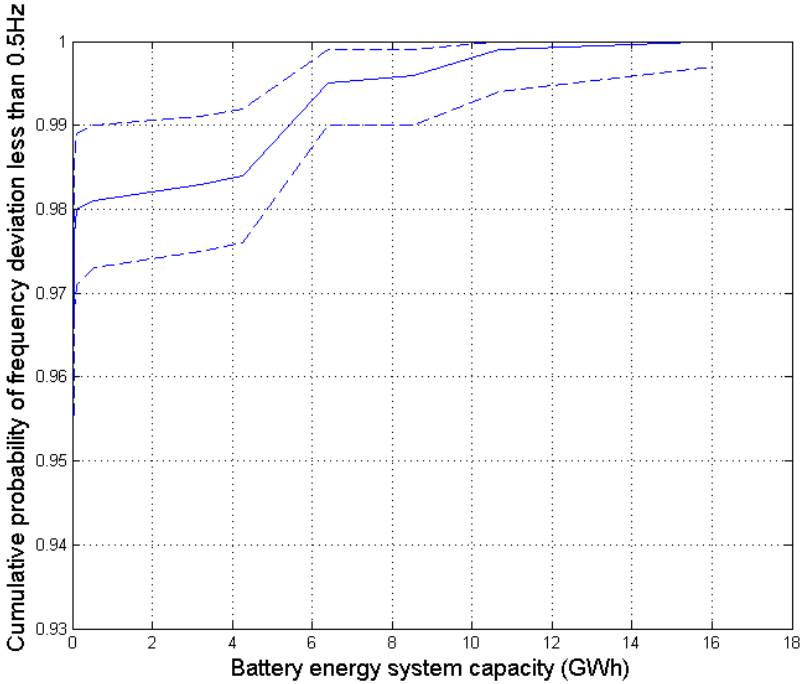

Cumulative probabilities and a 95% confidence level of satisfying frequency nadir requirement versus BESS capacities

- Having extremely good performance requires a large amount of capacity and can be very costly.
- The probabilities are conditional, i.e., conditioning on the occurrence of the second order disturbances, e.g., the probability of satisfying the frequency deviation requirement for the second order outages is about 0.984 for a total ESS capacity of 4.0 GWh.

Conclusions and Future Work

- The proposed approach
  - addresses the degrading inertial responses that are difficult to correct using means other than the responsive energy storage systems from the system operation perspective;
  - enables a risk-informed decision making process if a risk measure is defined appropriately;
  - is ready to be generalized to capture the randomness of any disturbances relevant to studies of different purposes;
  - can be improved by further developing the controller for the BESSs, including more randomness, and implementing the approach in a commercial software.